Department of Public Works Nassau County, N.Y.

Bid Sheet for Contract: H41876-01G

FOR INFORMATIONAL PURPOSES ONLY - NOT TO BE USED FOR BIDDING

Item No	Engineers Estimate	Item Description			
1	1.00 LS	Clearing and Grubbing	For:		
1M	1.00 LS	Mobilization	For:		
2S	1.00 LS	Unclassified Excavation	For:		
5C	360.00 CY	Selected Fill	For:		
12AS-4-18	45.00 LF	Reinforced Concrete Pipe, Class IV - 18" Dia.	For:		
12H	490.00 LF	Cleaning Existing Drainage System	For:		
12PS-12	40.00 LF	Smooth Interior Corrugated Polyethylene Drainage Pipe - 12" Dia.	For:		
12PS-15	185.00 LF	Smooth Interior Corrugated Polyethylene Drainage Pipe - 15" Dia.	For:		
12PS-4	25.00 LF	Smooth Interior Corrugated Polyethylene Drainage Pipe - 4" Dia.	For:		
12PS-8	35.00 LF	Smooth Interior Corrugated Polyethylene Drainage Pipe - 8" Dia.	For:		
13AS-B	2.00 EA	Catch Basins Type B	For:		
13AS-B-MOD	4.00 EA	Catch Basins Type B Modified	For:		
13BS-4	2.00 EA	Manholes - 4' Dia.	For:		

Department of Public Works Nassau County, N.Y.

Bid Sheet for Contract: H41876-01G

Item No	Engineers Estimate	Item Description			
13DS	2.00 EA	Downspout Connection	For:		
13S-PVC	1.00 EA	24" Dia. PVC Drain Basin	For:		
14	10.00 EACH	Connections to Existing Drainage Facilities	For:		
16SS-3	5.00 EACH	Change Elevation of Drainage Manholes & Drop Inlets (Minor Adjustment)	For:		
17A	60.00 CY	CLASS A CONCRETE FOR STRUCTURES	For:		
26	730.00 LF	Concrete Curb	For:		
26CWS-12	30.00 LF	Concrete Curb Wall - 12" Wide	For:		
26CWS-8	170.00 LF	Concrete Curb Wall - 8" Wide	For:		
26F	550.00 LF	Concrete Curb - Type Flush	For:		
26S-4	1,250.00 LF	Concrete Curb - 4" Reveal	For:		
27	8,500.00 SF	Cement Concrete Sidewalk	For:		
27SP	5,500.00 SF	Cement Concrete Pavement (Structures Parks)	For:		
28	600.00 SF	Cement Concrete Driveways and Driveway Aprons	For:		
30	70.00 SY	Metal Reinforcement for Concrete Pavement	For:		
33	1,200.00 LB	Bar Reinforcement for Structures	For:		

Department of Public Works Nassau County, N.Y.

Bid Sheet for Contract: H41876-01G

Item No	Engineers Estimate	Item Description			
34	8,600.00 LB	Miscellaneous Metals	For:		
36D	330.00 TONS	Asphalt Concrete Type 1A (Top & Binder)	For:		
99S-10	10.00 VF	Precast Concrete Leaching Basin - 10' Dia	For:		
102	1.00 LS	Work Zone Traffic Control	For:		
104PA-S-12	790.00 LF	Polyolefin Coated Chain Link Fencing - 12' High	For:		
104PA-S-6	750.00 LF	Polyolefin Coated Chain Link Fencing - 6' High	For:		
104XF	2,400.00 LF	REMOVE EXISTING FENCE	For:		
106P-S-SG	4.00 EA	Polyolefin Coated Chain Link Single Gate	For:		
110	8.00 CF	Masonry Pipe Plugs	For:		
111	20.00 SY	Removal and Replacement of Pavements	For:		
111TC	50.00 SY	Removal and Replacement of Pavements - Tennis Courts	For:		
114	4.00 EACH	Adjustment of Water Valve Box Elevation	For:		
121	600.00 CY	Drybound Base Course	For:		
122	6.00 EACH	Test Holes	For:		
136	1.00 LS	Survey Stakeout	For:		

Department of Public Works Nassau County, N.Y.

Bid Sheet for Contract: H41876-01G

Item No	Engineers Estimate	Item Description			
141	1,300.00 LF	Silt Fence	For:		
141B	16.00 EACH	Silt Protection For Surface Inlet Drainage Structures	For:		
141C	2.00 EACH	Silt Protection For Curb Inlet Drainage Structures	For:		
158A	5,300.00 SF	Geotextile Cloth	For:		
172	2,370.00 SY	Court Preparation for Color Coating	For:		
173	2,370.00 SY	Color Coating	For:		
174	2,810.00 LF	Painted Lines	For:		
180S	340.00 LF	Furnish and Install Trench Drain	For:		
199	1.00 LS	Interim Payments (Force)	For:	$100,000.00	
199A	1.00 LS	Asphalt Price Adjustment (Force)	For:	$800.00	
241S	1.00 LS	House Connection Assembly to Existing Sanitary Sewer - All Included	For:		
361S-A	27.00 EA	Planting Major Deciduous Trees	For:		
361S-B	8.00 EA	Planting Minor Deciduous Trees	For:		
361S-C	620.00 EA	Planting Deciduous Shrubs	For:		
361S-G	4,332.00 EA	Planting Grasses and Groundcover	For:		

Department of Public Works Nassau County, N.Y.

Bid Sheet for Contract: H41876-01G

Item No	Engineers Estimate	Item Description			
368	45.00 SY	Topsoil and Grass Seed	For:		
372A	11.00 EACH	Tree Removal - A - (<6" Caliper)	For:		
372B	6.00 EACH	Tree Removal - B - (6" - <12" Caliper)	For:		
372C	10.00 EACH	Tree Removal - C - (12" - <24" Caliper)	For:		
372D	3.00 EACH	Tree Removal - D - (24" - <36" Caliper)	For:		
501-S	4,200.00 SF	Permeable Concrete Pavers	For:		
502-S-4	4,000.00 SF	Safety Surface - 4' Fall Height	For:		
502-S-8	4,300.00 SF	Safety Surface - 8' Fall Height	For:		
504-S	750.00 SF	Repair and Refinish Handball Wall	For:		
506-S-2.5	155.00 LF	2.5' High Steel Fence	For:		
506-S-4	300.00 LF	4' High Steel Fence	For:		
506-S-4-DG	1.00 EA	4' High Steel Double Gate	For:		
506-S-4-SG	3.00 EA	4' High Steel Single Gate	For:		
506-S-6	510.00 LF	6' High Steel Fence	For:		
506-S-6-DG	2.00 EA	6' High Steel Double Gate	For:		
508-S	6.00 EA	Repaint Basketball Backstop	For:		

Department of Public Works Nassau County, N.Y.

Bid Sheet for Contract: H41876-01G

Item No	Engineers Estimate	Item Description			
510-S	2.00 EA	Install Existing Aluminum Bleachers	For:		
511-S-2	1.00 EA	Table and Chairs - 2 Seats	For:		
511-S-4	2.00 EA	Table and Chairs - 4 Seats	For:		
512-S	4.00 EA	Aluminum Bleachers	For:		
513-S	16.00 EA	Decorative Bench	For:		
514-S-1	6.00 EA	Sports Bench - In-ground Mount	For:		
514-S-2	2.00 EA	Sports Bench - Surface Mount	For:		
515-S	3.00 EA	Game Table and Chairs	For:		
516-S-1	3.00 EA	Picnic Tables	For:		
516-S-2	1.00 EA	Picnic Tables - Accessible	For:		
517-S	3.00 EA	BBQ Grill	For:		
518-S	8.00 EA	Bike Rack	For:		
519-S	8.00 EA	Litter Receptacle	For:		
520-S	2.00 EA	Drinking Fountain with Bottle Filler	For:		
521-S	1.00 LS	Furnish and Install Miniature Soccer Pitch Field	For:		
522-S	1.00 EA	Tennis Court Accessories Set	For:		

Department of Public Works Nassau County, N.Y.

Bid Sheet for Contract: H41876-01G

Item No	Engineers Estimate	Item Description			
523-S	1.00 EA	Flagpole and Foundation	For:		
524-S-A	1.00 LS	Shade Structures A (Playground Area)	For:		
524-S-B	1.00 LS	Shade Structures B (Seating Area)	For:		
525-S	1.00 LS	Steel Play Equipment	For:		
526-S	1.00 LS	Decorative Steel Spray Fixtures	For:		
527-S	4.00 EA	Exercise Equipment	For:		
528-S	1.00 EA	Park Entrance Gateway	For:		
531-S	1.00 LS	Maintenance Shed	For:		
532-S	1.00 EA	Site Dumpster	For:		
534-S	10.00 LF	Railing on Stairs	For:		
537-S	1.00 EA	Interpretive Sign	For:		
600-SE-1	1.00 LS	Site Electrical and Lighting Work	For:		
600-SE-2	1.00 LS	Video Surveillance System	For:		
700-SP	1.00 LS	Site Plumbing	For:		
800-SA	1.00 LS	Building Demolition and Renovation Work	For:		
900-AUC	1.00 LS	Allowance for Unforeseen Conditions	For:	$50,000.00	

Department of Public Works Nassau County, N.Y.

Bid Sheet for Contract: H41876-01G

TECHNICAL SPECIFICATIONS

H41876-01G
CENTENNIAL PARK REHABILITATION
DEPARTMENT OF PUBLIC WORKS
NASSAU COUNTY, NEW YORK

1. SPECIFICATIONS AND STANDARDS

All work included in this contract shall be in accordance with the following Nassau County Standard Specifications and Drawings, as modified and amended in the Contract Specifications and Drawings:

a. County of Nassau, Department of Public Works, 2009 Standard Specifications and Detail Sheets for Civil Engineering and Site Development Construction, Volumes 1, 2 and 3.

b. County of Nassau, Department of Public Works, Traffic Engineering, Traffic Signal Specifications and Standard Drawings, November, 1998 and Addenda.

c. County of Nassau, Department of Public Works, Latest Standard Specifications and Details for the Construction of Sanitary Sewers, latest edition June 2003.

All work included in this contract shall be in accordance with the New York State Department of Transportation (NYSDOT) Standard Specifications, May 1, 2020, as modified and amended in the Contract Specifications and Drawings.

The Contractor shall maintain a copy of these standard specifications and detail sheets on-site throughout the duration of the contract.

2. GENERAL CONSTRUCTION PAYMENT ITEMS AND ITEM SPECIFICATIONS:

The General Construction Payment Items and Item Specifications as printed in the above documents shall apply with the amendments and added Special Specifications contained herein.

3. SPECIAL SPECIFICATIONS:

The following pages are Special Specifications not included in NCDPW or NYSDOT Standard Specifications.

ITEM 2S - UNCLASSIFIED EXCAVATION AND DISPOSAL/PLACEMENT (LUMP SUM)

The requirements of Item 2 - Unclassified Excavation shall apply except as modified herein:

2. EXCAVATION:

   d. Removal of existing concrete pavements, curbs, footings, walls, haunches, etc. The breaking of concrete pavement as well as all other concrete materials including curbing, footings, reinforced concrete structures, drainage structures and associated drainage piping (all materials) shall paid under Item 2S.

   g. All pipe removals shall be paid under Item 2S.

   h. All existing debris, litter, construction debris, metals, boulders, etc. encountered on-site shall be removed and paid for under Item 2S.

   i. Removal of all play equipment, site furniture, BBQs spray features, backstops tennis court accessories, bike racks, sprinkler system remnants, flag pole, as shown on the removal plans and details shall be paid for under Item 2S.

   j. Removal of all pavement, let it be concrete, asphalt, rubber matting, or pavers as shown on the plans and details shall be paid for under Item 2S.

8. METHOD OF MEASUREMENT:
   Payment for unclassified excavation will be on a LUMP SUM basis for all work satisfactorily completed as per the plans and specifications or as ordered by the Engineer. The Contractor shall satisfy him/herself with the existing conditions, existing/proposed grades, removals and the availability of material required. No extra payment will be made for the removal of unsuitable material unless an unsuitable excavation item is included in this project. No extra payment will be made for importation of fill in borrow situations unless a specific fill item is included in this project.

9. BASIS OF PAYMENT:
   The price bid shall be a LUMP SUM price and shall include the cost of furnishing all labor, material, equipment, and the performance of all operations, including furnishing and applying water, as required, all grading, dewatering, and placing and compacting embankment or fill. NO additional payment will be allowed for rehandling material.

END OF SECTION

ITEM 12AS-4-18 – REINFORCED CONCRETE PIPE, CLASS IV

The requirements of Item 12A, Reinforced Concrete Pipe, Class IV of the NCDPW Specifications, shall apply, except as modified herein:

5. BASIS OF PAYMENT:

The price bid per linear foot shall include the cost of furnishing all labor, materials, tools, and equipment necessary to complete the work, *including the cost of all excavation and disposal in accordance with the requirements of Item 3 – Trench, Culvert and Bridge Excavation and temporary sheeting and bracing in accordance with the requirements of Item 10A – Temporary Sheeting and Bracing*. No additional payment shall be made for necessary excavation, backfill or sheeting.

Payment shall be made under the appropriate Items:

Item No.	Description	Unit
Item 12AS-4-12	Reinforced Concrete Pipe, Class IV - 12” dia.	LF
Item 12AS-4-15	Reinforced Concrete Pipe, Class IV - 15” dia.	LF
Item 12AS-4-18	Reinforced Concrete Pipe, Class IV - 18” dia.	LF
Item 12AS-4-24	Reinforced Concrete Pipe, Class IV - 24” dia.	LF
Item 12AS-4-30	Reinforced Concrete Pipe, Class IV - 30” dia.	LF

END OF SECTION

ITEM 12PS – SMOOTH INT. CORRUGATED POLYETHYLENE DRAINAGE PIPE

The requirements of Item 12P, Smooth Interior Corrugated Polyethylene Drainage Pipe of the NCDPW Specifications, shall apply, except as modified herein:

5. BASIS OF PAYMENT:

The price bid per linear foot shall include the cost of furnishing all labor, materials, tools, and equipment necessary to complete the work, *including the cost of all excavation and disposal in accordance with the requirements of Item 3 – Trench, Culvert and Bridge Excavation and temporary sheeting and bracing in accordance with the requirements of Item 10A – Temporary Sheeting and Bracing*. No additional payment shall be made for necessary excavation, backfill or sheeting.

Payment shall be made under the appropriate Items:

Item No.	Description	Unit
Item 12PS-04	Smooth Int. Corrugated Polyethylene Drainage Pipe - 4” dia.	LF
Item 12PS-08	Smooth Int. Corrugated Polyethylene Drainage Pipe - 8” dia.	LF
Item 12PS-12	Smooth Int. Corrugated Polyethylene Drainage Pipe - 12” dia.	LF
Item 12PS-15	Smooth Int. Corrugated Polyethylene Drainage Pipe - 15” dia.	LF
Item 12PS-18	Smooth Int. Corrugated Polyethylene Drainage Pipe - 18” dia.	LF
Item 12PS-24	Smooth Int. Corrugated Polyethylene Drainage Pipe - 24” dia.	LF
Item 12PS-30	Smooth Int. Corrugated Polyethylene Drainage Pipe - 30” dia.	LF

END OF SECTION

ITEM 13AS-B– CATCH BASINS – TYPE B

Item 13AS-B., Catch Basins, shall adhere to the requirements of NCDPW Specification Item 13A, Catch Basins, except as modified herein:

4. METHOD OF MEASUREMENT:

The quantity to be paid for this item shall be the *number of catch basins (EACH) installed* in accordance with the Plans and Standard Structure Sheets, as specified herein and ordered by the Engineer.

5. BASIS OF PAYMENT:

The unit price shall include the cost of furnishing all labor, materials, tools, steps, and equipment necessary to complete the work, *including the cost of all excavation and disposal and temporary sheeting and bracing in accordance with the requirements of Item 10A – Temporary Sheeting and Bracing*. No additional payment shall be made for necessary excavation, backfill or sheeting.

Frames, grates and covers will be paid under Item 34 – Miscellaneous Metals.

END OF SECTION

ITEM 13AS-B-MOD – CATCH BASINS – TYPE B MODIFIED

Item 13AS-B-MOD., Catch Basins, shall adhere to the requirements of NCDPW Specification Item 13A, Catch Basins, except as modified herein:

4. METHOD OF MEASUREMENT:

The quantity to be paid for this item shall be the *number of catch basins (EACH) installed* in accordance with the Plans and Standard Structure Sheets, as specified herein and ordered by the Engineer.

5. BASIS OF PAYMENT:

The unit price shall include the cost of furnishing all labor, materials, tools, steps, and equipment necessary to complete the work, *including the cost of all excavation and disposal and temporary sheeting and bracing in accordance with the requirements of Item 10A – Temporary Sheeting and Bracing*. No additional payment shall be made for necessary excavation, backfill or sheeting.

Frames, grates and covers will be paid under Item 34 – Miscellaneous Metals.

END OF SECTION

ITEM 13BS– MANHOLES – 4 FT. DIAMETER

Item 13BS., Manholes, shall adhere to the requirements of NCDPW Specification Item 13B, Manholes, except as modified herein:

4. METHOD OF MEASUREMENT:

The quantity to be paid for this item shall be the *number of manholes (EACH) installed* in accordance with the Plans and Standard Structure Sheets, as specified herein and ordered by the Engineer.

5. BASIS OF PAYMENT:

The unit price shall include the cost of furnishing all labor, equipment, and materials, except frames, covers, gratings, polyethylene steps, and will be paid for under the appropriate itmes listed below. Any excavation required for installing the structures is included under this Item and no payment will be made for this work under any other Items.

Frames, covers, gratings and step irons, etc. will be paid under Item 34 – Miscellaneous Metals.

The cost of all excavation and disposal and temporary sheeting and bracing in accordance with the requirements of Item 10A – Temporary Sheeting and Bracing is included under this item. No additional payment shall be made for necessary excavation, backfill or sheeting.

END OF SECTION

ITEM 13DS – DOWNSPOUT CONNECTION

1. DESCRIPTION:

Under this item, the Contractor shall furnish and install a downspout connection at the locations shown on the plans and where directed by the Engineer, in accordance with details shown and the manufacturer's recommendations.

2. MATERIALS:

SCH 40 4" diameter PVC pipe - to connect existing downspout to proposed drainage structure.

90 Degree Bend SxS and Fernco CI - to create a tight connection from the PVC pipe to the existing downspout.

Surface Renovation Mortar (Filler) - Mortar shall be thixotrophic, polymer modified, fiber reinforced, single component with aggregate extender, capable of thickness of 0 – 3".

Caulking - Caulking shall be silicone.

Submittals: Contractor shall furnish shop drawings and/or catalog cut sheets for all materials/products for Engineer's approval.

3. CONSTRUCTION DETAILS:

Install as per manufacturer's instructions and in accordance with NCDPW Standard Specifications Item 34 - Miscellaneous Metals, and as detailed below.

Excavation - Dig trench 12" wide and a minimum depth of 24" deep at location of downspouts. Erect a string line at proposed sidewalk level at downspout location and proposed top of pavement at drainage structure to establish a proposed elevation guide to set frame to the required level.

Pipe Installation – Cut pipe to required length to create connection for the entire length of connection. Bottom of pipe to be flush with bottom of curb on street side. Provide a slight pitch of pipe (min. 1.0%, max 2%), going towards the downspout, making sure to still have a minimum of 3" of coverage on top of the pipe. Make sure to shimmy pipe on building side and rest on smooth surface. If necessary, add clean fill to subgrade to assure a tight connection.

Fernco Connection – securely attach 90 Degree Bend SxS and Fernco connection between downspout and PVC pipe.

Slope Adjustment - Adjust PVC pipe, begin at the shallow end, to the desire slope. Tighten all nuts and bolts.

4. METHOD OF MEASUREMENT:

The quantity to be paid for under this item will be measured by the number of downspout connections installed in accordance with the plans, specifications and directions of the Engineer.

5. BASIS OF PAYMENT:

The unit price bid for this item shall include the cost of all excavation, disposal of excess material off-site, compaction, PVC pipe, fill, forms mortar, downspout connections piping, Fernco connection, and all necessary incidentals necessary to complete the work.

END OF SECTION

ITEM 13S-PVC 24 INCH DIAMETER PVC DRAIN BASIN WITH 24 X 24 INCH GRATE

(derived from NYS DOT Item 604.24010018)

1. DESCRIPTION

This work shall consist of furnishing and installing PVC drain basins in accordance with these specifications the contract documents and standard sheets for field inlets only. Drain basin items are not to be used in any traffic rated applications and must be capable of supporting HS- 25 loading.

2. MATERIAL

The specified drain basins shall be made using PVC pipe stock meeting all mechanical property requirements for fabricated fittings as described in the latest version of *ASTM F794 Standard for PVC Profile Gravity Sewer and Fittings*, and *ASTM F1336 Standard for PVC Gasketed Sewer Fittings*. Manufacturer shall use a thermo-molding process to reform the pipe to the required configuration.

Additional Materials shall conform to the requirements of the following:

Cast-In-Place Concrete, Class A	501
Frames , Grates and Covers	655
Smooth Interior Corrugated Polyethylene Culvert and Storm Drain Pipe	603
Concrete curing materials and admixtures	711

Elastomeric gaskets shall be in conformance with *ASTM F477 Elastomeric Seals (Gaskets) for Joining Plastic Pipe*.

Grates shall be made of cast or ductile iron. Metal used in grates manufacturing shall conform to ASTM A48 or ASTM A48M or ASTM A536. Buy America requirements will apply to the grates material.

3. CONSTRUCTION DETAILS

Excavation: All requirements as specified in Section 206 “Trench, Culvert and Structure Excavation” shall apply except as modified herein or as ordered by the Engineer.

Drain Basins: Drain basins shall be installed vertically on a minimum of 6 inches of compacted fill. HDPE pipe connection to the PVC basin drain shall be made with a belled stub and gasket providing a silt tight seal. A field connection using a gasket and bell combination is allowed.
Basins will be connected with the appropriately sized Smooth Interior Corrugated Polyethylene Culvert and Storm Drain Pipe along the flow line.

Field cutting the PVC vertical riser to proper height is allowed. Use of a manufacturer supplied PVC vertical riser extension shall be allowed to add height to the drain basin as required.

A transition section plate shall be used to transition from the PVC body to the specified grate. Concrete support collar for specified grate shall be Class A Portland Cement Concrete meeting all requirements of Section 501, Section 502-3.01 and shall be cured using a white pigmented curing compound material in accordance with Section 711-05.

Backfill: All units shall be backfilled in accordance to Section 203-3.15, Fill and Backfill at Structures, Culverts, Pipes, Conduits and Direct Burial Cables.

4. METHOD OF MEASUREMENT

Drain basins will be measured for payment by the number of units installed on an each basis.

5. BASIS OF PAYMENT

The unit price bid per unit shall include the cost of all labor, equipment and materials necessary to complete the installation including the PVC body, all necessary pipe connections and fittings, gaskets, transition section plate, poured in place concrete support collar and grate, excavation and backfill.

ITEM 26CWS – CONCRETE CURB WALL

The requirements of Item 26CW – Concrete Curb Wall shall apply except as modified herein:

3. CONSTRUCTION:
The concrete curb wall shall be built to the dimensions, measurements and specifications follow the Plan, Specifications and directions of the Engineer.

5. BASIS OF PAYMENT:

Payment shall be made under the appropriate Items:

Item No.	Description	Unit
Item 26CWS -8	Concrete Curb Wall 8” wide	LF
Item 26CWS -12	Concrete Curb Wall 12” wide	LF

END OF SECTION

ITEM 26S-4 – CONCRETE CURB 4 INCH REVEAL

The requirements of Item 26 – Concrete Curb shall apply except as modified herein:

3. CONSTRUCTION:
   The concrete curb wall shall be built to the dimensions, measurements and specifications follow the Plan, Specifications and directions of the Engineer.

END OF SECTION

ITEM 99S-10 – PRECAST CONCRETE LEACHING BASIN 10' DIAMETER

The requirements of Item 99-10 – Precast Concrete Leach Basin 10' Diameter shall apply except as modified herein:

3. METHOD:

Contractor shall backfill a 1'-0" width around the exterior of the leaching basin with a 1 ½" gravel or stone as shown on the details and in accordance with Item 19 – Screened Gravel, Loose Measure. Cost shall be included under Item 99S-10.

5. BASIS OF PAYMENT:

Cost for furnishing and installing gravel or stone backfill shall be included under Item 99S-10.

END OF SECTION

ITEM 104PA-S-6 – POLYOLEFIN COATED CHAIN LINK FENCING 6' HIGH
ITEM 104PA-S-12 – POLYOLEFIN COATED CHAIN LINK FENCING 12' HIGH

The requirements of Item 104PA, Polyolefin Coated Chain Link Fencing of the NCDPW Specifications, shall apply, except as modified herein:

5. BASIS OF PAYMENT:

The quantity of chain link fence to be paid for shall be the total number of lineal feet of each type of fencing and fan guards measured in final position, furnished, installed and maintained complete, where shown *and as detailed* on the Plans or directed by the Engineer, including, grading, excavation, footings, painted frame work, disposal of excess earth, clean up, furnishing and installing of fan guard. *The unit price bid for this item shall include all hardware, post sizes, replacement posts, fittings, individual footings for fence posts as detailed on the Plans and as directed by the Engineer.*

Payment shall be made under the appropriate Items:

Item No.	Description	Unit
Item 104PA-S-6	POLYOLEFIN COATED CHAIN LINK FENCING 6' HIGH	LF
Item 104PA-S-12	POLYOLEFIN COATED CHAIN LINK FENCING 12' HIGH	LF

END OF SECTION

ITEM 106P-S-SG – POLYOLEFIN COATED CHAIN LINK SINGLE GATE
ITEM 106P-S-DG – POLYOLEFIN COATED CHAIN LINK DOUBLE GATE

The requirements of Item 106P-SG/DG, Polyolefin Coated Chain Link Single Gate/Double Gate of the NCDPW Specifications, shall apply, except as modified herein:

5. BASIS OF PAYMENT:

The unit price bid per each square foot of gate shall include the cost of furnishing all labor, materials, tools, equipment and incidentals necessary to satisfactorily complete the required work. *The unit price bid for this item shall include all hardware, post sizes, replacement posts, fittings, individual footings for fence posts, hinges, locking mechanisms and shall apply for all gate and portal details as detailed on the Plans and as directed by the Engineer.*

Payment shall be made under the appropriate Items:

Item No.	Description	Unit
Item 106P-S-SG	POLYOLEFIN COATED CHAIN LINK SINGLE GATE	SF
Item 106P-S-DG	POLYOLEFIN COATED CHAIN LINK DOUBLE GATE	SF

END OF SECTION

ITEM 111 TC – REMOVAL AND REPLACEMENT OF PAVMENTS – TENNIS COURT

The requirements of Item 111, Removal and Replacement of Pavements of the NCDPW Specifications, shall apply, except as modified herein:

2. MATERIALS:

Top Course: The material for the top course shall meet the requirements of the latest edition of the NYS DOT Standard Specifications Section 400 "Bituminous Pavements". Composition of the asphalt concrete top course shall be Type 7 or Type 7F as indicated in the following table:

COMPOSITION OF TOP COURSE- TYPE 7
GENERAL LIMITS

SCREEN SIZE	% PASSING	JOB MIX TOL %
1/2"	100	-
1/4"	90-100	-
1/8"	45-70	+/-6
No. 20	15-40	+/-7
No. 40	8-27	+/-7
No. 80	4-16	+/-4
No. 200	2-6	+/-2
Asphalt Content %	6.0-8.0	+/-0.4

3. CONSTRUCTION DETAILS:

Spreading of Top Course: The top course mixture shall be furnished and laid by means of a mechanical spreader of approved design to a depth which after final compaction shall be equal to the specified depth. In areas where the use of a mechanical spreader is impractical, as determined by the Engineer, other means of spreading and compacting may be permitted. The use of hand rakes will not be permitted. The Contractor shall use lutes where necessary.

Where suitable abutting curb or headers are not available, grade control forms satisfactory to the Engineer shall be provided for screening. No extra payment will be made for these forms, but the cost of these shall be deemed included in the price bid for this item. The forms shall be removed, or with the approval of the Engineer, may be left in place.

Mixture shall be laid only where the surface to be covered is free from loose or foreign material, dry, and only when weather conditions, in the opinion of the Engineer, are suitable.

The Contractor shall provide suitable means for keeping all small tools clean and free from bituminous accumulations.

Rolling and Compacting: Upon completion of the spreading of the top course mixture, the material shall be consolidated thoroughly and uniformly with self-propelled tandem rollers. The top course shall be free from roller marks.

Rollers used for compacting the top course shall be well balanced, self-propelled, tandem rollers, weighing between seven (7) and eight (8) tons or approved vibratory roller. The roller shall have a compression under the rear wheel of between 200 and 300 pounds per linear inch of roll at a rate not exceeding 800 square yards per hour per roller. After compaction, the surface course shall have a density not less than 97% theoretical maximum density as determined by Appendix B of The Asphalt Institute Manual MS-2.

In locations inaccessible to the roller, the compression shall be effected with vibratory plate compactors or iron hand tampers weighing not less than twenty-five (25) pounds and having a bearing area not exceeding forty-eight (48) square inches, or other impact type equipment.

Joints: Construction shall be as nearly continuous as is possible. The roller shall pass over the end of the laid mixture only when a practical necessity. When the operation of laying is interrupted, the end of the laid material shall be left unrolled until such time as work is resumed, in order that there be no joints throughout the project. If it is necessary to roll the end of the laid mixture during construction, or permit traffic to pass over such temporary end, thus consolidating it, the joint so made shall be cut back before re-commencing the operation of laying, in order to present a fresh, clean surface for contact with the newly placed material. The edges of such joints shall be painted with liquid asphalt (RC-70 or MC-70) and the use of hot smoothing irons in finishing such joints, shall not be permitted.

Spreading of Top Course for Tennis Courts Only: The top course shall be installed in two (2) lifts and laid by means of a laser spreader of approved design. After the first lift the courts shall be flooded with water and allowed to drain. Any ponding or "bird baths" remaining after 45 minutes which cover a nickel shall be filled and leveled prior to applying the second lift. Depressions greater than one-eighth inch (1/8") shall be corrected.

Finished Surface: The surface of the top course of the pavement after compression shall be smooth and true to crown and grade, free from depressions, waves, bunches, overlapping seams and unevenness in surface.

After the compaction of the top course the Contractor shall check the entire paved area for depressions, using a ten foot (10') wood or metal straight-edge. Any depressions greater than three-sixteenths of an inch (3/16") shall be corrected by removing the top course of the affected areas, and replacing with new material to form a true and even surface.

END OF SECTION

ITEM 180S – FURNISH AND INSTALL TRENCH DRAIN

The requirements of Item 180, Trench Drain of the NCDPW Specifications, shall apply, except as modified herein:

2. MATERIALS:

TRENCH BODY
Trench drain shall be DuraTrench as manufactured by Eric'sons, 574C Industrial Way N., Dallas, GA 30132 - (770-505-6575) or approved equal.
The trench drain body shall be composed of polyester fiber reinforced polymer concrete. The trench shall have a 4" clear open throat and have a rounded or flat bottom as indicated in details. The trench body shall be gray in color to closely resemble the color of concrete and have a smooth interior for improved flow rates and reduced debris build-up. Sections shall be straight and 96" long (typical) and have a 2" receiving flange on the upstream end for receiving and sealing the trench sections together. Each of the sections shall be labeled to indicate proper flow and placement. The trench body shall mate to the frame and form a grate seat that shall accept the specified grate. The body shall be supplied with a factory fit top for rail alignment and fastening of the channels in the field ensuring that the rails are cast in a coplanar manner. The trench body shall have the following properties: 12,600 psi minimum tensile strength per ASTM C307, 12,000 psi. minimum compressive strength per ASTM C579, 26,500 psi minimum flexural strength per ASTM C580, less than 0.35% water absorption, shall be frost proof, salt proof, and be resistant to dilute acids and alkalis per ASTM C267.

GRATING:
Grating shall be 05C24BPC heavy duty heel proof and ADA compliant longitudinally slotted grate. The grate shall be made of grade A36 steel. The grate shall have a black powder coated finish. The grate shall be 4.875" wide x 24" long x 0.75" thick and have a minimum load rating of DIN Class C (exceeds H-20/HS-25).

FRAME:
Heavy duty load bearing Z profile frame constructed of 10 ga structural steel to accept 3/4" thick grates. Frames shall be powder coated black for corrosion resistance. Frames shall have 3" x 3/8" diameter headed concrete anchors at 18" O.C. and shall have rigid metal installation devices securely affixed to the frame for leveling and aligning of the trench drain system. Frames shall provide for a minimum of 27.5 square inches of bearing area per grate. Frame shall conform to ASTM A-36/A36M-93A. The frame is rated to support grates up to load class E.

GRATE LOCKS:
Grates shall be securely locked to frame with zinc plated bolt and locking toggle. Bolts shall be torqued to 35 inch-lbs.

OUTLETS:
Trench shall outlet without restriction into a 4" pipe in the bottom of the trench.

SUBMITTALS:
Submit detailed shop drawings of trench installation, materials, grates, sections, flow diagram & details for approval by the Engineer.

END OF SECTION

ITEM 241S - HOUSE CONNECTION ASSEMBLY TO EXISTING SANITARY SEWER – ALL INCLUDED

PART 1 - DESCRIPTION

1.01 - Description

A. Scope of Work

1. This Section includes the provisions for the installation of all house connections, risers and clean-out assemblies of the types and sizes as shown on the Plans and as specified.

1.02 - Pipe Options

1. All house connection pipes shall be a minimum six (6) inch diameter.
2. In general, all house connection pipe, riser pipe, and all fittings shall be manufactured of the same material and class as the mainline sewer pipe.
3. Where the sewer pipe is of reinforced concrete, the house connection pipe shall be connected to a six (6) inch diameter cored opening. The house connection pipe, riser pipe, and fittings shall be either VCP, PVC, or DIP.
4. Where pressure pipe is specified or ordered by the Engineer, the Contractor shall have the option, unless a specific type of pipe is required, of furnishing and installing either DIP or PVCP pipe.
5. All pipe and fittings for clean out assemblies in commercial and traffic areas shall be Extra Heavy Cast Iron. In all other areas, the Contractor has the option of using Extra Heavy Cast Iron or PVCP.
6. Where the depth of cover over the pipe is less than four (4) feet all pipe shall be DIP or PVCP unless otherwise specified or shown on the drawings.

1.03 - Submittals

1. Contractor to submit shop drawings of entire assembly, including but not limited to pipe, pipe fittings, risers, Geneco Sealtite Saddle, Inserta Tee or PVC Gasket Connection, and clean out assemblies, Storm Sanitary Diverter Vault, U-Trap, Gate Vavles, Layout Plan, Sections/Elevations, as well as product sheets for each product.

PART 2 - MATERIALS

2.01 - General

1. All pipe, fittings, joints, and incidentals shall conform to the requirements of Section 02570, "Sewer and Pressure Pipe" of these Specifications.
2. Clean-out castings, iron body ferrules, and brass screw plugs for clean-out assemblies

shall conform to the requirements of Section 05540, "Castings" of these Specifications.

3. Saddles for sewer connections to existing sewers and all reinforced concrete pipe shall be cast iron. Saddles for all riser connections and the horizontal connections to reinforced concrete pipe shall be Sealtite Model "US" or equal. Horizontal connections to sewers 8 through 24 inch diameter shall be made with Sealtite Model "ES" saddles or equal.

4. Concrete for connections shall be 3300 psi conforming to the requirements of Section 03010, "Concrete" of these Specifications.

5. Electronic markers shall be passive devices capable of operating at a depth range up to six (6) feet minimum. They shall be designed for a forty (40) year life, have a special response frequency for sewers only, and be *green* in color conforming to OSHA requirements.

PART 3 - EXECUTION

3.01 - Preparation

1. All requirements for preparation shall conform to the requirements of Section 02570, "Sewer and Pressure Pipe" of these Specifications.

2. The exact location and depth of house connections shall be as directed in the field by the Engineer to best suit, in location and depth, the property to be served.

3.02 - Installation

A. General

1. The installation of all pipe, fittings, assemblies, concrete encasement and incidentals necessary to complete the various items of work shall be as shown in the Standard Details for the Construction of Sanitary Sewers.

2. The open ends of all pipe stubs or lines installed for future connection shall be capped or plugged watertight. The use of solvent cemented caps or plugs will not be permitted.

B. House Connection Assemblies

1. For 8 to 24 inch diameter sewers, fittings for house connection assemblies shall be reducing "Y" fittings. The straight run of the "Y" fitting shall be the same size as the sewer line in which it is installed, and the reducing leg shall be the same size as the house connection pipe.

2. The "Y" fittings shall be installed in a rotated position at an angle of approximately twenty (20) degrees to the horizontal. The elbow shall be installed that it will best suit the run and slope of the house connection piping. The degree of rotation of the "Y" fitting shall be limited so that the

joints of connecting pipes and fittings are not impaired by excessive deflection.

3. For reinforced concrete pipe, a six inch cast iron saddle, pipe coupling and fitting, shall be installed over a six (6) inch cored opening in conformance with the details shown in the Standard Details for the Construction of Sanitary Sewers.

C. House Connections Tapped to Existing Sanitary Sewers or Interceptors

1. Where noted on the drawings or where directed by the Engineer, the Contractor shall make connections to existing lateral sewers and interceptors in conformance with the details shown in the Standard Details for the Construction of Sanitary Sewers.

2. The Contractor is advised that the existing sewer lines may be active or filled with water. The Contractor shall maintain flow in active lines while making the connection. Any sewer connections made to active lines shall be done during low flow periods. Sewer lines filled with water shall be drained prior to making the connection.

D. Riser Assemblies

1. A riser assembly shall be made with a reducing "T" fitting and elbows of the same kind and strength class as the pipe installed in the sewer line. The straight run of the "T" shall be the same size as the sewer line in which it is installed and the leg of the "T" fitting shall be the same size as the riser and house connection pipe.

2. When a riser assembly is to be installed on a section of reinforced concrete pipe or an existing sewer, a cast iron saddle and coupling shall be placed over a cored opening and the joint shall be constructed as shown on the Standard Details.

E. Additional Riser Height

1. The additional length of straight pipe required to increase the height of a standard riser assembly for a house connection shall be as ordered by the Engineer and shall be installed in a vertical position as shown on the Standard Details.

2. Care shall be taken by the Contractor to ensure that the riser pipe and fittings are properly braced. Riser pipe and fittings shall be held rigidly in place during backfilling and shall be maintained in a vertical position.

F. House Connection Pipe

1. All house connection pipe shall be a minimum six (6) inch diameter pipe.

2. House connection pipe shall be installed from the connection assembly or the riser assembly to a point one (1) foot inside the curb except as listed below:

a. Where storm water drains or utilities are located in the sidewalk area, the house connections shall be installed to a point beyond the back edge of the drain or utility.

b. In State highways, the house connections shall be installed to the property line.

c. House connection tunnelled close to poles or trees shall be extended to a point as determined by the Engineer.

d. Deep house connections (depth nine (9) feet or greater) shall be extended to a point five (5) feet beyond the edge of pavement and/or as directed by the Engineer.

3. Where the house connection pipe cannot be placed on undisturbed soil, the trench must be backfilled, and compacted to the invert of the house connection, prior to the installation of any horizontal part of a house connection pipe.

4. If in the opinion of the Engineer it is necessary to install a house connection under or close to a pole or tree, the house connection will be tunnelled.

5. An electronic marker shall be set six to twelve inches above to the last foot of a house connection pipe in a level position. For house connection locations which require marker placements at a depth greater than six (6) feet, a "dummy" plastic marker of the same color and size as the electronic marker shall be placed six to twelve inches above the end of the house connection pipe and the electronic marker set directly above at its maximum operational depth. Any damaged or defective electronic marker shall be replaced by the Contractor at no cost to the County.

6. The Contractor is advised that it will be his responsibility to accurately mark the location of the house connection at the curbline. This will be accomplished by means of two parallel chisel marks approximately two (2) inches apart, one-quarter (1/4) inch deep, and four (4) inches in length perpendicular to the curbline. These marks shall be painted green with durable paint approved by the Engineer. If no curb exists at the house connection location, these marks will be chiseled and painted on the sidewalk. If no sidewalk or curb exists at this location, a 2 inch x 2 inch x 18 inch hardwood stake shall be driven flush with the soil. The top of this stake shall be painted green with a permanent paint.

7. Should subsequent replacement of the curb and/or sidewalk be ordered by the Engineer, these marks shall be replaced at no additional cost to the County.

G. Clean-Out Assemblies

1. Clean-out assemblies shall be constructed in accordance with the Standard Details.

2. These assemblies shall be installed in locations as determined by the Engineer. In general, clean-out assemblies shall be installed on house connections that exceed thirty-five (35) feet in length from centerline of sewer to curb and in locations where the total length of house connection pipe from centerline of sewer to outlets at the residence or building exceeds seventy-five (75) feet. The distance between clean-out assemblies shall not exceed seventy-five (75) feet on house connections longer than one-hundred-fifty (150) feet.

3. All pipe and fittings shall be properly braced, supported and protected to avoid displacement or damage to the assembly and joints during the placement and compaction of the backfill, and they shall be maintained in a vertical position. The Contractor shall furnish and apply protective coatings to the cast iron frame and cover in accordance with Section 09800, "Protective Coatings" of these Specifications. The upper portion of the six (6) inch vertical pipe with the frame and cover shall be installed prior to the completion of the finished grade. Concrete and pea gravel shall be provided as shown in the Standard Details.

PART 4 - MEASUREMENT

4.01 - House Connection Assemblies

The work under this item shall include the furnishing and installing of a house connection "Y" fitting and elbow or the furnishing and installing of a pipe saddle, a pipe coupling and a thirty (30) degree elbow on reinforced concrete pipe, including core drilling, placing concrete, and all labor, materials, tools, equipment, sheeting, dewatering, excavation and incidentals necessary to complete the work.

4.02 - House connections Tapped to Existing Sanitary Sewers or Interceptors

The work under this Item shall include the furnishing and installing of pipe saddles, couplings and house connection fittings on existing sanitary sewers including core drilling, concrete, temporary sheeting, dewatering, excavation, backfilling, compaction, bulkheads of any type, pipe, all special fittings and clamps, and all labor, materials, tools, equipment and incidentals necessary to complete the work.

4.03 - House Connection Pipe

The work included under this Item shall include the removal of pavements, removal of unclassified curb, temporary sheeting, dewatering, excavation, the furnishing and installing of house connection pipe, backfill, compaction, and all labor, materials, tools, equipment, and incidentals necessary to complete the work.

4.04 - U-Trap with Double Hub Vents

The work included under this Item shall include the removal of pavements, removal of unclassified curb, temporary sheeting, dewatering, excavation, the furnishing and installing of U-trap with double hub vents and cast iron clean-out vault covers embedded in concrete pad, house connection pipe, backfill, broken stone at bottom of vault, compaction, and all labor, materials, tools, equipment, and incidentals necessary to complete the work as shown in the plans and details.

4.05 - Storm-Sanitary Diverter Vault

The work included under this Item shall include the removal of pavements, removal of unclassified curb, temporary sheeting, dewatering, excavation, the furnishing and installing of concrete vault to the extensions shown in the plans and details, including gate valves in the quantities and as specified in the plans and details, including but not limited to connection pipe, backfill, compaction, and all labor, materials, tools, equipment, and incidentals necessary to complete the work as shown in the plans and details.

PART 4 - PAYMENTS

For furnishing and installing all work as described herein and in accordance with the plans, approved shop drawings, specifications and directions of the Engineer, the Contractor shall receive the LUMP SUM price bid.

The price bid shall be a LUMP SUM for all sanitary connection equipment as described herein and accordance with the plans, and approved shop drawings, and at the directions of the Engineer and shall include the cost of all labor, materials, equipment and incidentals necessary to complete the work, including excavation, concrete pads, house connection assemblies and interceptors, house connection pipe, u-trap with double hub vents and clean-outs, storm-sanitary diverter concrete vault, manual gate valves, and all submittals, in accordance with the plans, approved shop drawings and specifications, to the satisfaction of the Engineer.

END OF SECTION

ITEM 361S-A – PLANTING MAJOR DECIDUOUS TREES
ITEM 361S-B – PLANTING MINOR DECIDUOUS TREES
ITEM 361S-C – PLANTING DECIDUOUS SHRUBS
ITEM 361S-D – PLANTING EVERGREEN TREES
ITEM 361S-E – PLANTING EVERGREEN SHRUBS UPRIGHT
ITEM 361S-F – PLANTING EVERGREEN SHRUBS SPREADING
ITEM 361S-G – PLANTING GRASSES/GROUNDCOVER
ITEM 361S-H – PLANTING FERNS/PERENNIALS

1. DESCRIPTION:

A. The trees and shrubs shall be planted according to Nassau County DPW standards and as modified herein. The trees shall be planted in the locations as indicated on the contract drawings or as ordered by the Landscape Architect.

B. Under this Item the Contractor shall furnish and plant all trees and shrubs at locations as shown on the drawings and/or as determined by the Landscape Architect. The trees shall be of the type size and caliper as indicated on the contract drawings.

C. Contractor shall excavate all tree pits including saw cutting asphalt; removal of asphalt from tree pits and shall furnish, plant, dig, transplant, transport, maintain and replace all plant materials specified in the following plan; schedule in accordance with the Specifications or as directed by the Landscape Architect. In excavating tree pits, the contractor shall remove and dispose of all concrete footings, pavements, pipe, conduit and rubble.

A. The Contractor shall be liable for any damages caused by planting and/or transplanting operations and all areas and construction disturbed shall be restored to their original condition to the satisfaction of the Landscape Architect.

B. Contractor shall be responsible for locating all utility lines including traffic conduits, electric, water, telephone, cable and and/or natural gas installations. Also, the Contractor shall be responsible for repairing all damage to utilities.

2. GENERAL:

A. Quality and Condition:

1. All trees and shrub shall be nursery grown, shall conform to the dimensions specified and shall present a balanced proportion of height and spread for the particular specimen desired. Each tree or shrub shall show a normal habit of growth, free of any insect and disease injury, or physical damage. Plants shall be typically characteristic of the particular species and variety. Plantation grown trees and Evergreens will not be acceptable without consent by the Landscape Architect.

2. Unless otherwise specified, trees are to be suitable for planting as street trees and are to be free of branches to a point about 50% of their height. The trunk shall be reasonably straight with leader intact and a sell-balanced symmetrical branching habit. Ball size and height shall conform to A.A.N. standards.

B. Digging:

1. In digging the trees and shrubs with a root ball, the minimum lateral diameter of the root ball shall be as specified. The root ball shall be of sufficient depth to include all lateral roots. All roots encountered during digging operations shall be cut flush to the side of the ball with sharp loping or pruning shears. The root ball shall be firm and compact, tightly and adequately bound with burlap wrapping. Platforms will be required for the balls over six (6) feet in diameter to assure solidity of the ball. If trees are unloaded by a bucket loader machine of the sufficient size, platforms may be eliminated with the approval of the Landscape Architect. Under no circumstances shall the root ball be artificially manufactured to meet size requirements and none will be accepted in a loose, broken or lopsided condition.

2. All trees and shrubs required by the proposal, specifications or plans to be moved with ball and burlap will be measured across the minimum later diameter of the root ball. The root balls shall be wrapped and laced as shown in the 2004 American Standard for Nursery Stock. Rope shall be a minimum of 3-ply sisal or approved equal.

3. All trees and shrubs that are required by the proposal specifications or plans to be dug bare root shall have all fine fibrous roots preserved. After digging, the bare root plants shall be puddled in a heavy mixture of clay, mud, and packed with straw or salt hay, held in a moist condition until planted.

C. Transportation and Delivery:

1. The tops of trees and shrubs shall be tied in with heavy twine to protect branches from being broken during loading, shipping, and unloading. Utmost care shall be taken to protect the trunks of trees during transit. All trees with broken terminal leaders shall be rejected.

2. A burlap cover shall be tightly secured on the tops of all trees and shrubs during shipment.

3. Any balls of the trees or shrubs delivered to the site in a loose, broken or dried condition will be rejected.

4. Plants delivered to the contract site shall be planted within 48 hours from time of delivery. All others will be rejected and promptly removed from the site. If, due to no fault of the landscape Contractor, he is unable to plant in a specified area, such as other Contractor's operations, wet soil conditions, or inclement weather, the Landscape Contractor shall take the necessary steps to heel in the plant material with

wood chips or salt hay in a shady location, to the satisfaction of the Landscape Architect.

D. Inspection:

1. All trees and shrubs shall be subject to inspection and approval and marking at the growing site, but approval and marking at the growing site shall not obligate the Town to pay for any tree or shrub until it has been delivered and planted at the planting site in a satisfactory condition. In all instances where it is deemed necessary by the Town to make physical inspections of nursery stock or other materials, the contractor shall pay to the Inspector's expense of transportation, meals, and lodging incurred by the Inspector or Inspectors in traveling beyond the confines of Nassau County to the place of inspection. The removal of nursery stock rejected at the planting site shall be at the expense of the contractor and replacement in compliance with specifications shall be made at not extra cost to the Town.

2. The Town reserves the right to inspect and seal plant materials for replacement which have died during the maintenance and guarantee period. The above standards shall apply.

E. Measurement:

1. Measurement of sizes for various trees required by the proposal shall be in accordance with those specified in the publication "American Standard for Nursery Stock" by the American Association of Nurserymen, Inc., 230 southern Building, Washington, D.C. 20005, approved as USA Standard Z60.1-1973 by American National Standards Institute, Inc., February 1, 1973.

F. Names:

1. Plant names shall agree with the nomenclature of "Standardized Plant Names" as adopted by the American Joint Committee on Horticultural Nomenclature 1942 Edition: Size and grading standards shall conform to those of the American Association of Nurserymen unless otherwise specified. No substitution shall be permitted except by written permission of the Landscape Architect.

G. Abbreviations:

Cal. – indicates the caliper of the trunk of the tree
B.R. – indicates plants to be dug with bare roots
B&B – indicates plants to be bailed and burlapped
B&P - indicates plants to be balled and platformed
C.G. - indicates container-grown plants.

3. <u>MATERIALS:</u>

A. Jute Burlap:
Jute Burlap shall weigh eight ounces per square yard.

B. Twine:

1. The tying material used in the balling of trees shall be sisal rope or approved equal, not less than 3 ply for trees 4 ½" in diameter.

C. Fertilizer:

1. The fertilizer for tree plantings shall be ROOTS Tree Saver®, a slow-release type dry granular mycorrhizal fungi inoculants , as manufactured by Lebanon Turf, 1600 E. Cumberland St., PA 17042, Tel.:(1-800-233-0628), or approved equal. It shall contain spores of ectomycorrhizal and VA mycorrhizal fungi (VAM), beneficial rhizosphere bacteria, Terra-Sorb® superabsorbent hydrogel to reduce water leaching, and selected organic microbial nutrients. Application rate shall be one 3 ounce bag per 1 inch caliper tree. The price bid for each shrub and tree shall include the applicable amount of packets.

2. Just prior to mulching of the plant materials, ROOTS Healthy Start 343 Granular shall be applied to all other planting areas, , as manufactured by Lebanon Turf, 1600 E. Cumberland St., PA 17042, Tel.:(1-800-233-0628), or approved equal. Application rate shall be 25 pounds per 1,000 square feet. The price bid for each shrub and tree shall include the applicable amount of packets.

3.

D. Wood Chip Mulch:

1. Mulch shall be shredded hardwood only. Mulch must be well aged, uniform in color, and free of foreign material including plant material. Well aged mulch is defined as mulch that has been stockpiled or stored for at least twelve (12) months

E. Topsoil:

1. Topsoil shall conform to Item 9 – Topsoil of the Nassau County Standard specifications, which shall be included into the price bid for the plants at no additional cost for the Client.

F. Spraying with Anti-Desiccant:

1. The Contractor shall spray all plant material with an anti-desiccant, using an approved power sprayer to apply an adequate film over trunks, branches, twigs and/or foliage, as directed by the Engineer. The anti-desiccant shall be an emulsion which will provide a protective film over plant surfaces, permeable enough to permit transpiration. Anti-desiccant shall be "WILT-PROOF" supplied by Nursery Specialties Products, Inc., Croton Falls, N.Y., "VANEX" supplied by Vansul & Co., 193 William Street, Englewood, N.J., or approved equal. Anti-desiccants shall be delivered in the containers of the manufacturer and shall be mixed according to the directions.

4. PLANTING OPERATIONS:

A. Layout:

1. Each tree shall be planted at the stake & location as determined by the Landscape Architect. All necessary grades shall be furnished by the Landscape Architect or Engineer.

2. The contractor shall be responsible for placing the proper variety of tree or shrub at the locations as shown on the plans or in the distribution schedule of the proposal. If the County as determines an error described above, the Contractor shall replace the tree or shrub with the proper plant in the next succeeding planting season and maintain and guarantee that tree for 1 year from date of replacement.

B. Size of Pits:

1. The pit diameter shall be twice the root spread for plants up to and including a two foot root spread; equal to root spread plus two feet for plants with a root spread of two to four feet; one and one half times the root spread for plants with a root spread of over four feet and/or as directed by the Landscape Architect. The depth of pits shall be adequate to permit a minimum of 6" inches of topsoil backfill under all roots or balls.

   The above applies for spread of roots of bare root plants and balled and burlapped plants.

2. Larger pits may be required, if so specified in the plans or specifications.

3. When designated on the plans as a planting bed, the depth of the bed for shrubs shall be 18" deep and the bed for ground covers shall be 12" deep. Depth of beds shall be taken from surrounding existing grades.

4. In grass areas, the tree pits along various roads shall be a minimum of 48" long and the widths shall be from the back of the curbs to the edge of the sidewalk, or where room allows the width shall be a minimum of 48" wide.

5. In concrete and asphalt paved areas, the tree pits along various roads shall be a minimum inside length of 5'-0" feet. The minimum inside width shall be 5'-0"" wide.

C. Disposal of Excavated Materials:

1. Topsoil and subsoil excavation from tree pits and planting beds shall be disposed of off the site by the Contractor. Existing topsoil shall not be used for planting unless so within these specifications.

D. Partial Payment For Excavation and Backfill:

1. Due to the seasonal requirements of tree and shrub plantings a partial payment of (20%) twenty percent of the price bid per item shall be paid to the contractor if he so elects to pre-dig and backfill with topsoil and amendments, tree pits and shrub beds, according to plans and specifications and as directed by the Landscape Architect.

5. PLANTING PROCEDURES:

A. General:

1. All trees and shrubs shall be set plumb and at such a level that after settlement they are level with existing grade. Do not bury root ball. Set root ball on 6 inches of compacted topsoil. All trees and shrubs shall be backfilled to the crown with topsoil, supplied as specified in Item 9 - Topsoil, of the Nassau County Standard Specifications. Topsoil shall be thoroughly and properly settled by tamping and by watering.

B. Pruning:

1. The pruning of all plants shall be done on the job site, or as otherwise specified or approved by the Landscape Architect. All plants pruned without previous approval shall be rejected.

2. Deciduous trees and shrubs shall be pruned to reduce the vegetative growth by 1/3 of its total branching. Wood removed shall be interior branches, competing branches, crossing branches and dead and damaged wood. The natural branching habit of the plant shall be adhered to at all times.

3. Trees used in street tree plantings, parking areas, and playground areas shall have all branches removed up to a height of six (6) feet.

4. The center leader of all major trees shall be straight, healthy and unimpaired in any way. Damaged leaders shall not be acceptable.

5. Pruning will be done by competent workmen in accordance with accepted horticultural practices, and as directed by the Landscape Architect.

C. Balled Plants:

1. Balled plants (B.&B., B.&P.) shall be backfilled with topsoil carefully tamped around and under the base of each ball to fill voids. Platforms shall be removed. All root ball supporting materials shall be removed from the top one third of the root ball and removed from the planting hole prior to final back filling.

D. Bare-root Plants:

1. Roots of bare-root (B.R.) plants shall be properly spread out in a natural position and topsoil shall be worked in among them watering. All broken and frayed roots shall be cleanly cut off.

E. Container Grown-plants:

1. Shall have been grown in pots, tubs or boxes for a minimum of six (6) months and a maximum of two (2) years. Plants shall have sufficient roots to hold the earth together, intact after removal from containers, without being rootbound. The sizes for containers shall conform to the largest size container specified in the "American Standard for Nursery Stock" by the American Association of Nurserymen, Inc.

F. Fertilizer Packets:

1. Fertilizer as described under "Materials" shall be placed at time of planting. The placing of fertilizer after tree or shrub planting will not be permitted. All planting will cease until fertilizer become available for use.

G. Water and Mulch:

1. Surface of tree pits shall be filled with 3" depth of wood chip mulch. No mulch shall be put against basal flare of tree trunk.

2. All shrub beds shall be completely covered with 3" depth of wood chip mulch.

3. At the time of planting, the soil around each plant shall be saturated with 25 gallons of water for each square yard of pit area. All trees and shrubs will be watered at least once per week, unless otherwise directed by the engineer until final acceptance.

H. Edging of Planting Areas:

1. The Contractor shall establish a neat edge where Planting Areas meet grass areas as shown on the plan or as directed by the Landscape Architect. Edging shall be done by competent mechanics in workmanlike manner with spade or edging tool immediately after all planting and seeding is completed. Particular care shall be exercised in edging to establish good flowing curves as shown on the plans or as directed by the Landscape Architect. Edging shall be maintained by the Contractor for the duration of the contract.

I. Access to all Operations for Inspection:

1. The Contractor shall furnish such facilities and give such assistance for reasonable inspections as the Landscape Architect or Engineer may request, and shall secure free access to all sites where the plant material is located or work is in progress.

J. Time of Planting:

1. The planting seasons for deciduous materials shall be from March 1 to May 15 and from October 15 to December 1. Deciduous tree shall be planted in a dormant condition. If deciduous trees are planted in leaf, they shall be sprayed with an anti-desiccant as described under “Materials”. Evergreen material shall be planted from March 15 to May 15 and from September 1 to November 1. All evergreen material shall be sprayed with an anti-desiccant as described under “Materials”.

2. Upon written request by the Contractor to the Landscape Architect, an extension of the deciduous planting season for winter planting may be granted. Extension will be determined by the Genus of trees to be planted and soil conditions.

K. Restoration:

1. All pavements, sodded and planted areas, structures and substructures not specifically provided for in the Contract, disturbed by the Contractor during the execution of the work shall be restored by the Contractor, in a manner satisfactory to the Landscape Architect to their original conditions at no addition cost to the Town.

L. Guarantee:

1. The contractor shall guarantee the life of all plants in this contract for a period of one year after final acceptance of Work Order. Any plant, which is damaged, destroyed or dies from whatever cause except theft or vandalism during the above period shall be replaced within fifteen days upon written notice to the Contractor by the County.

2. It should be noted that due to planting seasons, the Contractor will be required to replace any dead plant within the two planting seasons, during the one year guarantee period which may entail replacing the same plant twice after final acceptance.

3. The Contractor shall be responsible for all work required to maintain the trees and shrubs properly and make necessary replacements during the guarantee period, including watering, mulching, pruning, re-staking and replanting. He shall maintain during this period a sufficient labor force at all times to maintain the plants in a proper manner and perform all necessary operations efficiently and expeditiously.

4. The Contractor shall be required to water all plant material a minimum of six (6) times during the maintenance and guarantee period. Work shall be performed when plants are in active vegetative growth. If in the opinion of the Landscape Architect, unseasonable dry conditions exist, additional watering may be required as directed by the Landscape Architect.

5. In addition to watering, requirements specified herein, each plant shall receive 25 gallons of water for each square yard of pit area.

M. Maintenance:

1. Planting shall include the cost for all watering under the maintenance and guarantee period.

2. At the end of the one year guarantee, the Contractor shall remove and dispose of all stakes, wire, hose, burlap and twine from all trees as approved by the Landscape Architect. Also, all holes left due to removal of stakes shall be filled with topsoil to the existing grade.

3. The cost of maintenance, replanting operations and removal of staking and wrapping shall be included in the price bid.

4. Upon completion of this contract, the Contractor shall supply a maintenance bond to the County equivalent in dollar value for the amount of work completed within the last six months.

N. Final Inspection:

1. When, in the opinion of the contractor, the work is complete and ready for final inspection he shall notify the Landscape Architect who will arrange to give the entire work a thorough inspection. Before final payment will be made, any dead plants, defects or omissions noted on this inspection must be rectified by the Contractor without additional compensation.

6. PAYMENT:

A. The unit price bid per each plant shall include the cost of excavating plant pits, furnishing all planting materials, disposal of excess subsoil, furnishing plants, digging and transporting trees from nurseries, furnishing and placing topsoil, inspecting, planting, pruning, staking, guying, anchoring, wrapping, watering, restoration, replacing and maintaining all trees, distributing fertilizer over plant pits and all other work, including maintenance, incidental thereto in accordance with the specifications to the satisfaction of the Engineer.

B. In all locations where utilities are located, the Contractor shall dig the tree pits by hand where required, which shall be included in the bid price.

C. In the event, Contractor cannot procure the material as shown, listed, they should refer to the Town in writing for any alternative approach and/or suggestions.

Note: The Contractor may be required to certify to the Town the patented varieties of trees specified in this contract.

Payment shall be made under the appropriate Items:

Item No.	Description	Unit
Item 361S-A	Planting Major Deciduous Trees	EA
Item 361S-B	Planting Minor Deciduous Trees	EA
Item 361S-C	Planting Deciduous Shrubs	EA
Item 361S-D	Planting Evergreen Trees	EA
Item 361S-E	Planting Evergreen Shrubs Upright	EA
Item 361S-F	Planting Evergreen Shrubs Spreading	EA
Item 361S-G	Planting Grasses & Groundcovers	EA
Item 361S-H	Planting Ferns & Perennials	EA

END OF SECTION

ITEM 501-S - PERMEABLE CONCRETE PAVERS

1. DESCRIPTION

This section describes the furnishing and installation of permeable interlocking concrete pavers.

2. MATERIALS

A. Materials:

1. The interlocking concrete pavers shall be the following or approved equal:

   SF-RIMA® environmental paving stones with paver-shield, sizes to be square 8" x 8"x 3.125";

   Color to be Granit City Blend

   As manufactured by Nicolock, 612 Muncy Avenue, Lindenhurst, NY 11757, NY 11757
   Tel.: (631) 669-0700, Email: info@nicolock.com

2. The solider course concrete pavers shall be the following or approved equal:

   Holland Stone paving stones with paver-shield, sizes to be rectangular 4" x 8"x 2.375";

   Color to be Granit City Blend

   As manufactured by Nicolock, 612 Muncy Avenue, Lindenhurst, NY 11757, NY 11757
   Tel.: (631) 669-0700, Email: info@nicolock.com

3. Crushed Stone Filler and Bedding shall be Type 2 conforming to the grading requirements of ASTM C 33 No 8 in accordance with Section 2.02.

4. Base Aggregate shall be Type 2 conforming to the grading requirements of ASTM C 33 No 57 in accordance with Section 2.02.

5. Subbase Aggregate shall be Type 2 conforming to the grading requirements of ASTM C 33 No 2 in accordance with Section 2.02.

6. Pavers shall have a minimum compressive strength of 7,000 psi.

B. Submittals:

1. The Contractor shall submit four sample pavers of each color and shape clearly identified by the manufacturer's name, date of production and contract number and these sample pavers shall represent the range of colors to be produced, the size, shape, intensity and surface texture of the

blocks he plans to use in the work. Blocks with discolorations, cracks, honeycombs extreme surface irregularities shall not be considered acceptable for the work or as samples.

2. The Contractor shall hand deliver samples to the Engineer with transmittal letter and obtain a signed receipted acceptance of delivery. There will be no material delivery to job site without prior written approval; all material delivered to site without such approval shall be rejected. Contractor shall submit samples in sufficient time as to not delay progress of construction.

C. Quality Assurance

Contractor shall be a company specializing in the installation of permeable interlocking concrete pavers with a minimum of 10 years' experience and shall provide the names and contact information for (3) similar projects in the last 5 years.

3. CONSTRUCTION DETAILS

A. The Contractor shall remove from the subgrade all debris, foreign material, and all other undesirable material designated by the Engineer. The fine grade shall not be muddy or otherwise unsatisfactory when material is placed upon it. If the fine grade becomes rutted or displaced, due to any cause whatsoever, the Contractor shall regrade same without additional payment.

B. Subbase and Base Aggregates for pavers shall be installed at proper elevation to accept pavers and crushed stone bedding. Before any pavement is placed upon the fine grade, the fine grade shall be prepared to line and grade and compacted to a minimum of 95% standard Proctor density per ASTM C 698. All hollows and depressions shall be filled with acceptable material and shall again be compacted. This process of shaping, filling, and rolling shall be repeated until no depressions develop. Provide written density test results for soil subgrade to the Engineer.

C. Prior to placing the subbase and base aggregates, the finished subgrade surface shall not extend above the design elevation at any location and filter fabric material shall be fumished and installed on the prepared surface.

D. Subbase and base aggregates shall be evenly spread on a prepared sub-grade in the position shown on the plans or directed by the Engineer, in four inch (4") layers, each layer to be rolled while wet with a seven (7) to twelve (12) ton tandem roller (or other approved method satisfactory to the Engineer), to the thickness shown on the plans or as directed by the Engineer.

E. Pavers shall be laid on a compacted two (2) inch crushed stone bedding, in straight courses with hand tight joints and uniform top surfaces, keeping good alignment and starting rows alternately with full and half pavers, or according to pattern shown on the plans. Newly laid pavers must be protected at all times by panels of plywood on which the paver stands. These panels can be advanced as work progresses; however, the plywood protection must be kept in areas which will be subjected to the continued movement of material and equipment. These precautions must be taken in order to avoid depressions and protect paver alignment.

F. Pavers shall also be adequately protected from discoloration, due to adjacent paving operations, by an approved method. Pavers shall be placed at right angles with the center of the paving surface. Alignment shall be verified periodically.

G. Pavers shall be arranged with the rows touching so that the "ends" of the pavers will form the proper corresponding angle and the proper distance between "ends" not to exceed 118 inch. Joints between the pavers shall be maintained according to the unit integral spacer bars. A plate vibrator shall be used to compact and level the pavers after they have been installed. It is important that the correct type and size compactor be used.

H. After the pavers are laid, crushed stone filler is to be swept into the hand tight joints until the joints are filled. All uncompleted edges and end of pavers shall be adequately braced and/or retained at the end of each work-day with temporary asphaltic concrete mixture or other approved method. All cutting and setting of pavers shall progress with the setting operation. Under no circumstances shall area requiring cut pavers be permitted to remain at the end of each work day.

I. After a sufficient area of pavement has been laid, the pavement shall be tested with a ten foot straight edge and any depressions exceeding one-quarter inch (1 /4") shall be corrected and brought to proper grade. Any pavers disturbed in making replacements or correcting depressions shall be settled into place by ramming. Only full crews shall be permitted to install pavers. Under no circumstances shall one or two man crews be permitted to install pavers

4. METHOD OF MEASUREMENT

The quantity to be measured for payment under Item 501-S Permeable Interlocking Concrete Pavers shall be the number of square feet of Interlocking Concrete Paving Block installed to the satisfaction of the Engineer, measured in place.

5. BASIS OF PAYMENT

The contract price bid for Item 501-S, Permeable Interlocking Concrete Pavers, shall be a unit price per square foot and shall cover the cost of all labor, materials, plant, equipment, insurance, and incidentals necessary to furnish and install permeable interlocking concrete pavers in designated areas. The unit price bid shall also include, but not be limited to, the removal of existing pavement regardless of type of pavement, the cost of furnishing and installing crushed stone bedding, filter fabric, and joint filler; all in accordance with the plans, the specifications and the directions of the Engineer.

The cost of furnishing and installing underdrain pipe shall be paid separately under their respective pay item.

END OF SECTION

ITEM 502-S-4 SAFETY SURFACE – 4' FALL HEIGHT
ITEM 502-S-8 SAFETY SURFACE – 8' FALL HEIGHT

1. DESCRIPTION:

Under these items, the Contractor shall furnish and install SAFETY SURFACE of various types in accordance with the plans, specifications and directions of the Engineer.

Note: The safety surface shall be installed as soon as possible after the play equipment installation is complete. The Contractor shall be responsible for temporarily barricading the Play Equipment prior to completion of the safety surfacing installation.

Intent: In general, mats shall be utilized according to ASTM F1292-09 (or latest issue) drop height criteria as follows: tot unit play areas shall be surfaced with mats which meet or exceed 5 foot drop height criteria; ten foot high play swing areas shall be surfaced with mats which meet or exceed 10 foot drop height criteria; all other areas shall be surfaced with mats which meet or exceed 8 foot drop height criteria.

2. MATERIALS:

Molded Rubber Mats: Safety surfacing shall be a waffle type compression molded rubber mat with an abrasion resistant surfacing and ribs underneath which will provide an air entrained cushion. Each material shall be of a thickness necessary to meet or exceed the standards and testing requirements as stated in this specification. Color shall be as shown on the drawings. All colors (other than red) shall be paid as colored. Color speckles on black background shall be paid as red. Color speckles on color background shall be paid as colored. Marbleized color design shall be paid as colored.

Compression molded synthetic rubber mats shall consist of a minimum one-quarter (1/4") inch thick abrasion resistant top membrane with a cushion-course rib system underneath. Material shall not have more than one-sixteenth (1/16") inch surface distortion and shall be of uniform specified color and appearance.

Safety surface shall be the following product subject to conformance with all testing criteria, or approved equal:
BURKE Standard Buffing Tile Square 2.25" – 4' Fall Height – tile dimensions to be 2'x2'
BURKE Standard Buffing Tile Square 3.25" – 8' Fall Height – tile dimensions to be 2'x2'

Color as specified in drawings as determined by Owner.

As manufacturered by BURKE,
Contact: Playground Consultant Erica Peritore; American Recreational Products, 144-1 Remington Blvd. Ronkonkoma, NY 11779; Tel: (631)310-7560; email: Erica@americanrecreational.com

Premolded synthetic polyurethane safety surfacing consisting of rubber crumbs bound together with a polyurethane binder and/or poured in place safety surfacing are not acceptable under this specification.

Adhesives: Any variation from pre-approved adhesives must be submitted as per "Submittals". The following adhesives have been pre-approved for specific applications:

"Epoxygrout" 2 Part Epoxy as manufactured by U.S. Epoxy, Patchogue, NY, or approved equal, for plastic or rubber anchor to asphalt applications.

Lord® Cyanoacrylate Adhesive as manufactured by Lord Chemical Products Corp., Cary, NC, or approved equal, for rubber to rubber applications. Cyanoacrylate adhesive is commonly known as "Superglue", or "Crazy Glue".

STANDARDS: All safety surface material shall meet the latest suggested guidelines published in the "Handbook for Public Playground Safety" by The U.S. Consumer Product Safety Commission (C.P.S.C.), and The American Society for Testing and Materials (ASTM) as outlined below.

TESTS; Safety surfacing must meet the following test requirements and criteria:

1. Shock Absorbency - When tested in accordance with ASTM F1292-09 (or latest issue) Test Method F355, Procedure C (Metal Headform), the surface shall not impart to the headform upon impact, a peak deceleration exceeding 200 times the acceleration due to gravity (200G's) and shall not exceed 1000 Head Injury Criteria (HIC). Test submittals must clearly state that test was performed over the seam and anchoring system, and on the body of the tile. The drop height(s) used in this test shall be the height(s) as noted on the contract drawings or as directed by Nassau County DPR.

2. Weathering (Aging) - After being subject to fifty (50) freeze-thaw cycles in accordance with ASTM C67, "Freezing and Thawing", and after being subject to 200°F for 7 days in accordance with ASTM D573, "Rubber Deterioration in an Air Oven", the same sample shall be re-tested in compliance with ASTM F1292-09 at 72°F only. A peak deceleration reading not exceeding 200G's shall be maintained. HIC testing is not required for re-testing.

3. Slip Resistance - When using the "British Portable Skid Resistance Tester" in accordance with ASTM E303, the wet-dynamic reading shall not be less than 40.

4. Flammability - When tested in accordance with ASTM E648, "Standard Test Method For Critical Radiant Flux Of Floor Covering Systems Using A Radiant Heat Energy Source", the material shall have a minimum critical radiant flux of 0.22 Watts/cm^2

3. INSTALLATION:

Installation of all types shall be in accordance with CPSC guidelines and manufacturers installation instructions approved by the Engineer. The safety surfacing should not create new hazards; hence, all installations shall be done as carefully as possible in a neat and skillful manner.

All safety surfacing shall either be recessed with the top flush with surrounding finish grade, or have a beveled perimeter transition piece along its entire open perimeter to allow for a smooth, easy transition between the surrounding finish grade and the level of the safety surfacing. Safety surfacing in swing areas shall be installed with full thickness to the fence or curb except in the entryway, which shall have a beveled edge.

Molded rubber mat installation must be by mechanical means of each individual tile. Adhesives to hold small, cut pieces of mat to pavement surface are unacceptable. Adhesives are only to be used with anchoring devices, transition piece, or caps as described in "Adhesives". Shop drawing shall clearly show that every piece is connected by mechanical means. The installation shall be vandal resistant and be firmly secured so that it cannot be pulled

up from the playground surface.

Mats shall have either: a) all center tiles secured individually to the playground surface with vandal- resistant anchors, or b) mechanically locked together to prevent separation or removal of blocks from play area. The perimeter transition pieces shall be secured to the pavement with vandal-resistant anchors or approved adhesives.

Any anchoring system used shall not create "hard" spots within the surfacing which fails to meet test requirement No. 1 and ASTM 1292. All plugs shall be installed flush with or slightly recessed (1/8" maximum) below the rest of the surfacing; plugs shall not protrude above the surrounding surfacing. All mats shall be installed so that they will be hand tight in hot weather. Necessary adjustments shall be made for installation in cool weather.

SPECIAL CONDITIONS: Where surfacing may cover a drain opening, the surfacing shall be drilled or slotted in a pattern matching the basin openings to allow for drainage. Where surfacing covers a basin or manhole, the Contractor shall drill six (6) one-quarter (1/4") inch holes at an angle of 45° providing a vent for the basin or manhole. Surfacing shall be formed around tree pits and not cover granite block, provided that such elements are outside the fall zone.

ADDITIONAL TESTING: The County reserves the right to make any additional tests it feels necessary, and the Contractor shall furnish material when needed for testing.

EXTRA MATERIALS: The Contractor shall furnish (furnish only, not install) extra materials and deliver to Nassau County Parks Department as follows:

additional 50 (fifty) rubber anchors or plugs

The above materials shall be delivered to the APRM of the division or the Supervisor of Mechanics (ONLY) and a signed receipt (from M&O) shall be submitted to the Engineer to acknowledge M&O receipt of the aforementioned materials.

SUBMITTALS: All submittals shall be submitted prior to manufacture and in accordance with the requirements of the General Conditions, Section C, Special Provisions, Article 11.

1. Material: For approval and prior to installation, the Contractor shall submit two samples of each drop height specified of the safety surface material no larger than one foot by one foot (1' x 1') in size representing color, composition and thickness proposed to be used, the drop height used, and the supporting certified test data showing that the material meets or exceeds the test requirements of this specification. In addition, all anchoring / attachment components and product literature for necessary adhesives which vary from preapproved adhesives shall be submitted for approval. The Project Manager may waive this requirement, where samples and test results are on file.

2. Shop Drawings: A Shop drawing of the proposed safety surfacing layout shall be drawn in 1/4" = 1'- 0" scale (unless otherwise specified by the project manager) and shall clearly show the following details: actual size of mats or modular tiles; size of transition pieces; size of cut pieces, if any; location of all mechanical anchors, rods, or clips; type of adhesive to be used; and exact location of all play equipment, posts, springs or other support systems. As-built deviations from the proposed safety surfacing layout made during installation shall be approved in the field by the Engineer in writing on the shop drawing.

3. Installer Certification. Installer must be trained and certified by the manufacturer. Installer's certification on manufacturer's letterhead shall be submitted to the Engineer.

4. Insurance Certificate: The Contractor shall furnish a Manufacturer's Certificate of Product Liability Insurance for a minimum of one (1) million dollars naming "Nassau County Parks Department" as Additional Insured. Insurance shall be for one year, starting at the Contract Final inspection date.

5. Warrantee against Shrinkage: The Contractor shall furnish a standard one year manufacturer's warrantee, enhanced as follows: For three full years, starting from the date of Contract Final inspection, the Manufacturer agrees to reinstall or replace material which shrinks, creating a gap between mats of more than one-half (½") inch. Measurement shall be performed in an ambient temperature of 72o F + 5o F.

6. Manufacturer's Recommended Installation Instructions and Maintenance and Repair Instructions. Installation, maintenance and repair of all types of safety surfacing, including adhesives, graffiti removal, etc shall be per manufacturer's instructions. Instructions shall be submitted and subject to approval by the Engineer.

4. MEASUREMENT AND PAYMENT:

The quantity of SAFETY SURFACE of various types to be paid for under this item shall be the number of SQUARE FEET furnished and installed in accordance with the plans, specifications, and directions of the Engineer. No deduction shall be made for cut surfacing removed for cross section of posts.

The price bid shall be the unit price per SQUARE FOOT of each type and shall include the cost of all labor, materials and incidentals necessary to complete the work, in accordance with the plans and specifications to the satisfaction of the Engineer.

In addition, the Contractor shall deliver EXTRA MATERIALS as outlined above to County. Unless otherwise specified, one set of extra materials is required per contract, regardless of number of items. No additional payment shall be made for extra materials. Contractor shall include cost in the bid price.

Payment shall be made under the appropriate Items:

Item No.	Description	Unit
Item 502-S-4	Safety Surface – 4' Fall Height	SF
Item 502-S-8	Safety Surface – 8' Fall Height	SF

END OF SECTION

ITEM 504-S REPAIR AND REFINISH HANDBALL WALL

1. DESCRIPTION:

Under these Items, the Contractor shall repair damage to the concrete wall as necessary and refinish and repaint the wall in accordance with the plans, specifications, and directions of the Engineer.

The Work includes, but is not limited to, surface preparation, such as chipping of deteriorated concrete and cleaning, priming of reinforcement, filling of cracks, holes, defects, and all depressions up to four and one-half (4 ½") inch in depth with repair mortar; cleaning of wall surface, applying cementitious surface coating, and application of paint color system (including court lines and park leaf on handball backstop wall), as directed by the Engineer and in accordance with this specification and the manufacturer's directions.

QUALIFICATION TRAINING AND EXPERIENCE: All concrete reconstruction must be performed by a qualified mason, experienced in proper masonry techniques. The Contractor shall provide evidence the masonry sub/contractor has a minimum of three (3) years relevant experience. Project names and address of the person(s) for whom the work was performed shall be submitted. In addition, a letter from the manufacturer documenting Contractor's installation training and/or experience in the use of the product specified for this project shall be submitted. A minimum of two (2) projects of a similar nature within the last five (5) years is required to complete this reference list. Contractor shall contact the manufacturer's representative to arrange a convenient meeting time after award of Contract.

2. MATERIALS:

2.1. Vertical Repair Mortar:

Latex modified cementitious priming and repair mortars shall be selected based on the application:

A. Handball Backstop Repair:

Repairs shall be made in lifts of three-quarter (3/4") inch and shall be Strongcrete SW-82 with Corrogard corrosion inhibitor additives and Styrene Butadiene Rubber (SBR) rubber modifier as manufactured by Strongwall Industries, Inc., Ridgewood, NJ, or approved equal

B. Concrete Wall Repair:

Repairs shall be made in lifts of one and one-half (1-1/2") inch and shall be Strongcrete SW-88 with Corrogard corrosion inhibitor additives and Styrene Butadiene Rubber (SBR) rubber modifier as manufactured by Strongwall Industries, Inc., Ridgewood, NJ, or approved equal

2.2. Resurfacing Material:

Latex modified two (2) component, 90 mil, cementitious surface coating shall be Strongwall SWS-213 Court Wall System including Bond Coat (30ml), Base Coat (50ml), and Finishing Coat (10ml); or approved equal.

2.3. Bond Coat and Base Coat:

Both the Bond and Base Coats shall consist of SC #3 Liquid mixed with SC #3 powder, mixing ratio shall be in accordance with Strongwall 213 System installation instructions as manufactured by Strongwall Industries Inc., or approved equal.

2.4. Finishing Coat:
Paint shall be Resicolor #4 homopolymer topping, as manufactured by Strongwall Industries, Inc., or approved equal.

Mixing Ratios for Bond Coat, Base Coat, and Finishing Coat shall be as per manufacturer's recommendations and installation instructions. Apply primer with mason's brush to all concrete and steel surfaces that will receive mortar mix.

2.5. Expansion Joints:
Expansion joints shall be replaced to match those existing, DPR Standard, or as directed by Engineer.

3. EXECUTION:

Surface Preparation: The Contractor shall remove all layers of paint, clean and prepare the concrete surfaces as per recommendations of the manufacturer of the product to be applied. All loose or unsound concrete shall be chipped out with a lightweight (7-12 oz.) chipping hammer to remove all spalled concrete as well as visible active galvanic cells. Where reinforcement is exposed, chip and wire brush off scale and loose rust down to a sound, rust-free substrate. Where rust is leaching into the concrete behind the exposed portion of the rebar, wirebrush to remove loose scale and other contaminants from the exposed portion of the rebar down to clean metal, all rust must be completely removed from the substrate. All cracks one-eighth (1/8") inch and wider shall be routed out to sound concrete to a minimum width of one-half inch (1/2") over the entire length of the crack. This opening shall extend beyond the cracks until sound concrete is reached. Blow out to remove all dust and other debris. All other cracks smaller than one-eighth (1/8") inch shall be detailed with crack treatment component EM-100N as manufactured by Strongwall Industries Inc, or approved equal.

Cleaning: Thoroughly clean all surfaces to be reconstructed by wet sandblasting, high pressure water blasting, steam cleaning, heavy duty paint remover, or other approved means to remove dirt, oil, asphalt patches, algae, paint, graffiti, concrete sealers, or curing compounds, as directed by the Engineer. Sandblasting may be the method if approved in writing by the Agency.

Priming of Reinforcement: Wherever concrete deterioration has resulted in exposure of reinforcing steel, the steel must first be properly cleaned free of all rust, dirt and debris, down to a completely rust free substrate prior to being primed with application of Bond Coat. Apply Bond Coat using a mason's brush.

Priming of Substrate: The substrate of areas to be patched shall be soaked with clean water with no standing water (saturated surface dry, SSD). The damp surface shall be primed with the specified Bond Coat mix scrubbed in using a mason's brush, filling all voids and pores. Bond Coat shall only be applied to the clean substrate after reinforcement has also been cleaned down to rust free, clean metal.

Repair Material: Mix bag size batches of repair mortar materials using a paddle attached to a heavy-duty high-speed drill. Add powder to the liquid while mixing continuously for two (2) minutes maximum. Apply materials immediately after mixing. Use the specified vertical repair material based on substrate. Apply successive lifts within fifteen (15) minutes of mortar mix placement, between coats preparation is not necessary. The Contractor shall use the specified repair mortar to fill and resurface minor holes, cracks, shallow depressions, imperfections, honeycombs, and rough or otherwise defective areas in concrete substrate. Repair mortar shall be used to form a crown over the top surface of the court backstops, pitched

at approximately ten degrees (10°) to aid drainage.

Bond Coat: All holes and spalled areas shall be patched with the specified mortar mix. The Bond Coat shall be applied only when the substrate and air temperature are forty-five degrees F. (45°) and rising or above or when rain is not anticipated for at least three hours from final application.

Base Coat: Areas to be resurfaced shall be clean and free of contaminants and other coating materials, graffiti, loose particles and other bond inhibiting materials. Before application of the Base Coat, the walls shall be well dampened with clean water to attain moisture saturated, surface dry substrate. Base Coat material shall be applied in a single coat by hawk and trowel or an air powered hopper gun and finished with a steel trowel to achieve a smooth surface. The desired finish is a uniform, level, and fine textured surface.

Mixing and placement shall be done in accordance with the manufacturer's directions. The Contractor shall mix only enough two (2) part Base Coat material that can be completely applied within the time allowed by the pot life of the product. Material that started to cure before installation shall be disposed of and fresh material shall be batched.

Unless otherwise directed by the Engineer, the Contractor shall assume that the Base Coat will be applied over the entire area to be reconstructed. Actual area to receive the Base Coat shall be determined by the designer and/or the Resident Engineer, depending upon the uniformity of the existing surfaces.

Curing: Allow the Base Coat to fully cure overnight and finish with the specified Finishing Coat.

Application of Finish Coat: Apply paint when ambient air temperatures are between 45° degrees and 95° degrees Fahrenheit and when surfaces to be painted are free of moisture, dampness, and other foreign particles. Painting will not be allowed below the minimum ambient air temperature, nor before the surface is approved by the Engineer as being sufficiently clean. After all repair and resurfacing of concrete has cured and curing compounds removed for approximately eight (8) hours, apply two (2) coats of the Finish Coat on all wall surfaces.

All coating applications shall be done in a neat and workmanlike manner. The Contractor shall protect all portions of the site against disfigurement by spatters, splashes and smirches of coating materials. The Contractor shall provide and lay drop cloths where necessary to protect the base and site, and shall keep the site of the Work clean at all times. The paint shall be applied thoroughly and evenly using either brush or roller, leaving no skips or inadequately covered areas on the wall surfaces. Applications shall fill all cracks and fissures leaving no fins or runs. Clean any drips or spills immediately with lacquer thinner before it cures. Allow the first coat to dry per manufacturer’s instructions before application of topcoat. Unless otherwise shown on Contract Drawings, colors shall be designated as described below:

Painting Walls and Backstop: Concrete walls and backstop shall receive two (2) coats of Strongwall Resicolor #4 as manufactured by Strongwall Industries, Inc., or approved equal. The color shall be light gray, Federal Standard Color # 37150, with lusterless finish, unless otherwise shown on contract drawings. Drying time to recoat is a minimum of two (2) hours at ambient temperature and dry mil thickness is four (4) mils.

Painting Court Lines on Backstop: Paint for court lines on handball backstop shall be two (2) coats of

Resicolor #4, or approved equal. All Court Lines shall be carefully laid out and defined on the wall surface by chalk markings or stencils before being color coated, and shall be accurately coated within the limits shown on the Plans. All lines shall be clear and distinct, with sharply defined edges. Color shall be white.

Product Delivery, Storage and Handling:
The Contractor shall supply sufficient quantities of material necessary to complete the work. All material shall be used and disposed of in accordance with the Manufacturer's instructions and all relevant local, state and federal regulations. Workers and handlers shall use necessary safety equipment in accordance with O.S.H.A. guidelines. Contractor shall deliver all surplus paint supplies from the originally purchased 5 (five) gallon container of Finish Coat to D.P.R.

SUBMITTALS:
Masons Qualifications: The Contractor shall submit for approval, the name and qualifications of the proposed Sub/Contractor. The Contractor shall submit the following:

1. Proof of three (3) years of experience.
2. Documentation from manufacturer of required combination of training and experience.
3. Name, address and phone numbers for two (2) professional references associated with masonry work performed within the past five (5) years.

Sample: Paint chip color samples shall be submitted for approval prior to application of paint.

Mock-up: A sample four foot by four foot (4' x 4') area shall be resurfaced on the existing wall surface at the direction and discretion of the Engineer, to be approved by the Agency. If sample is found unacceptable, it shall be redone at no additional cost to the City until it is approved and accepted in writing. Once sample is approved by the Agency, it shall be the standard to which all Work is judged.

Guarantee: The Applicator and the Manufacturer shall provide the Agency with a five (5) year joint guarantee on the products and systems covered by this specification upon completion of work.

The Manufacturer of the specified products shall be under no obligation to provide a guarantee of the specified products in this specification, should a Contractor be selected other than an Applicator of the manufacturer specified.

4. MEASUREMENT AND PAYMENT:

The quantity of Repair and Refinish Handball Wall shall be paid for under this Item shall be the number of SQUARE FEET of wall or backstop cleaned, patched, and resurfaced in accordance with the plans, specifications, and directions of the Engineer.

The prices bid shall be a unit price per SQUARE FOOT of wall reconstructed and shall include the cost of all labor, materials, equipment and incidental expenses necessary to complete the reconstruction, including surface preparation, expansion joint reconstruction, application of repair mortar, application of resurfacing material, and application of paint system including court lines, all in accordance with the plans and specifications, to the satisfaction of the Engineer.

END OF SECTION

ITEM 506-S-6 – 6' HT. STEEL FENCE
ITEM 506-S-6-DG – 6' HT. STEEL DOUBLE GATE
ITEM 506-S-4 – 4' HT. STEEL FENCE
ITEM 506-S-4-DG – 4' HT. STEEL DOUBLE GATE
ITEM 506-S-4-SG – 4' HT. STEEL SINGLE GATE
ITEM 506-S-2.5 – 2.5' HT. STEEL FENCE

1 DESCRIPTION

UNDER THIS ITEM THE CONTRACTOR SHALL FURNISH ALL LABOR, MATERIALS, TOOLS, EQUIPMENT AND INCIDENTIALS NECESSARY TO PROVIDE A NEW INDUSTRIAL ORNAMENTAL STEEL FENCE SYSTEM OF THE SIZE AND TYPE AS SPECIFIED HEREIN AT LOCATIONS SHOWN ON THE CONTRACT DRAWINGS.

2 MATERIALS

THE MANUFACTURER SHALL SUPPLY A TOTAL STEEL ORNAMENTAL FENCE SYSTEM OF THE DESIGN DESCRIBED BELOW OR APPROVED EQUAL. THE SYSTEM SHALL INCLUDE ALL COMPONENTS (I.E. PICKETS, RAILS, POSTS, BRACKETS, GATES AND HARDWARE) REQUIRED.

PRODUCT MANUFACTURER - PROVIDE ONE OF THEFOLLOWING:

FORTRESS FENCE, PRODUCTS 1720 NORTH FIRST STREET GARLAND, TX 75040
PHONE: (844) 909-1999 FAX: (972) 644-3720; WEBSITE: WWW.FORTRESSFENCE.COM
EMAIL: SPECIFICATIONS@FORTRESSFENCE.COM

OR EQUAL APPROVED BY ENGINEER.

MANUFACTURER OF ORNAMENTAL FENCE SYSTEM SHALL GUARANTEE, IN WRITING, THE AVAILABILITY OF REPLACEMENT PARTS AND COMPONENTS FOR A PERIOD OF NOT LESS THAN 5 YEARS AFTER COMPLETION OF THE WORK.

MATERIALS: RAILS ARE GRADE A COLD ROLLED STEEL FORMED U-CHANNEL HAVING A 50,000 PSI YIELD STRENGTH. PICKETS ARE GRADE A COLD ROLLED STEEL FORMED AND WELDED TUBING HAVING A YIELD STRENGTH OF 45,000 PSI. BOTH CONFORMING TO ASTM A500 WITH G 60 ZINC COATING (0.60 OZ/FT^2) TOTAL INSIDE AND OUTSIDE SURFACES IN ACCORDANCE WITH THE ASTM A123 HOT DIPPED ELECTROPLATING PROCESS.

COMPONENTS:

A. RAILS: 1 ¾" SQUARE, 14 GA. FORMED U-CHANNEL ASTM 500 GALVANIZED STEEL.
B. PICKETS: 1" SQUARE, 14 GA., 16 GA., 18 GA. ASTM A500 GALVANIZED WELDED AND FORMED STEEL TUBING.
C. POSTS: 2 ½" SQUARE 16 GA., 14 GA., 12 GA., OR 3" SQUARE 14 GA., 12GA. ASTM A500

GALVANIZED FORMED AND WELDED STEEL TUBING WITH POWDER COATED FACTORY FINISH.

D. FASTENERS: ALL NUTS, BOLTS, AND SHEET METAL SCREWS ARE STAINLESS STEEL CONFORMING TO ASTM F593-02E2 STANDARD.

E. AVAILABLE COLORS: BLACK SAND, GLOSS BLACK, BRONZE, GREEN SAND, GREEN.

STYLE:

A. FORTRESS IRON'S TITAN ARCHITECTURAL FENCE IS MADE IN: FLAT TOP (FT), EXTENDED PICKET (EXT), PRESSED SPEAR (SP), AND CURVED TOP (CT).

B. 3 15/16" AIR SPACE BETWEEN PICKETS.

FABRICATION:

A. FENCE PANELS ARE FULLY ASSEMBLED AND FABRICATED IN STANDARD LENGTH OF 90 ½" AND STANDARD HEIGHTS OF 34", 46", 58", 70", 82", 94", 106", AND 118". ALL PANELS COMPLY WITH REQUIREMENTS INDICATED FOR MATERIALS, THICKNESS, DESIGN AND DETAILS OF CONSTRUCTION.

B. GROMMETS ARE INSERTED INTO PRE-PUNCHED RAILS, AND THEN THE PICKETS ARE INSERTED THROUGH THE GROMMETS.

C. PICKETS ARE ATTACHED TO THE RAIL VIA A PATENTED SLIDE LOCK SYSTEM.

D. ALL COMPONENTS ARE ACCURATELY CUT AND DRILLED TO RECEIVE HARDWARE, FASTENERS AND ACCESSORIES.

E. PANELS SHALL BE CAPABLE OF SUPPORTING A 680 LB. LOAD (APPLIED AT MID-SPAN) WITHOUT PERMANENT DEFORMATION. PANELS SHALL BE RACKABLE TO A 24" CHANGE IN GRADE.

FINISH:

A. MATERIALS ARE COATED WITH THE FORTRESS SHIELD PROCESS INCLUDING GALVANIZATION, ZINC PHOSPHATE, ELECTRODEPOSITION (E-COAT), AND ARCHITECTURAL GRADE POWDER COAT.

B. METAL PARTS ARE ASSEMBLED AND FINISHED INDIVIDUALLY PRIOR TO SHIPMENT.

C. GALVANIZED STEEL FENCE COMPONENTS ARE CLEANED WITH A NON-PETROLEUM SOLVENT FOLLOWED BY THE APPLICATION OF A SEALING ZINC PHOSPHATE COATING.

D. IMMEDIATELY AFTER SEALING, A TWO-STEP FINISHING PROCESS CONSISTING FIRST OF AN ELECTROSTATIC DIPPING PROCESS IN A LEAD FREE HIGH CORROSION RESISTANT EPOXY RESIN LEAVING A COATING OF APPROXIMATELY 20 MICRONS FOLLOWED BY A THERMOSETTING CARBOXYL POLYESTER RESIN TOP COAT WITH A MINIMUM DRY FILM THICKNESS OF 60 TO 70 MICRONS. THE SECOND COATING WILL BE APPLIED BY THE ELECTROSTATIC SPRAY PROCESS.

3 <u>SUBMITTALS</u>

THE CONTRACTOR SHALL PROVIDE SUBMITTALS IN ACCORDANCE WITH THE CONTRACT DOCUMENTS

PRIOR TOINSTALLATION.

1. SAMPLES-SUBMIT FOR APPROVAL SAMPLES OF RAILINGS, POSTS AND CONNECTIONS WITH THE SPECIFIED METAL FINISH, INCLUDING CONNECTIONS, NOT LESS THAN 6 INCHES LONG. SAMPLES SHALLBE REVIEWED FOR TEXTURE AND COLOR ONLY. COMPLIANCE WITH ALL OTHER REQUIREMENTS IS THE EXCLUSIVE RESPONSIBILITY OF THE CONTRACTOR.

2. SHOP DRAWINGS-SUBMIT FOR APPROVAL SIGNED AND SEALED SHOP DRAWINGS FORTHE FABRICATION AND ERECTION OF ORNAMENTAL FENCE SYSTEM. INCLUDE PLANS, ELEVATIONS, AND DETAILS OF SECTIONS AND CONNECTIONS. SHOW ANCHORAGE AND SPLICING ITEMS.

3. CERTIFICATION-FURNISH WRITTEN CERTIFICATION FROM MANUFACTURER FOR COMPLIANCE TO STRUCTURAL ANDFINISH STANDARDS SPECIFIED HEREIN.

PRODUCT DELIVERY, STORAGE AND HANDLING

1. PACK, SHIP, STORE AND HANDLE ALL RAILING AND COMPONENTS INA MANNER TO PROTECT MANUFACTURER'S FINISH.

4 <u>CONSTRUCTION DETAILS -</u>

STAKE LAYOUT SHOWING LOCATIONS OF ALL GATES AND POSTS. CONTACT "CALL BEFORE YOU DIG" PRIOR TO BEGINNING ANY EXCAVATION WORK.

INSTALLATION

A. INSTALL FENCES IN ACCORDANCE WITH WRITTEN INSTRUCTIONS AND IN ACCORDANCE WITH AUTHORITIES HAVING JURISDICTION.
B. CONCRETE SET POSTS: DRILL HOLE IN FIRM SOIL. POSTS HOLES WILL BE A MINIMUM OF 36" DEEP (ENVIRONMENTAL CONDITIONS OR LOCAL CODES MAY REQUIRE A GREATER DEPTH). FENCE POST SHALL BE SPACED 95" ± 1/4" ON-CENTER TO ACCOMMODATE INSTALLATION OF BRACKETS ON 2 ½" SQUARE POST. FOR NON-LEVEL INSTALLATIONS THE ON-CENTER POST SPACING MUST BE MEASURED ALONG THE GRADE
C. INSTALLATION IS TO CONFORM TO THE SPECIFICATIONS REFERENCED IN SECTION 1.02 OF THIS SPECIFICATION.
D. INSTALL FORTRESS BRACKETS ONTO FENCE SECTION AND POSTS AS INDICATED IN PRINTED INSTRUCTIONS FOR SPECIFIC FENCE STYLE. ATTACH FENCE SECTIONS TO BRACKETS WITH APPROVED FASTENERS AND TECHNIQUES TO INSURE THAT FENCE SECTIONS ARE PARALLEL TO GRADE WITHIN ¼" IN 12 FEET.
E. GATE INSTALLATION: INSTALL IN ACCORDANCE WITH PRINTED INSTRUCTIONS. DO NOT MOUNT GATE FROM WALL OF A STRUCTURE. PROVIDE GATE POST ON BOTH SIDES OF A GATE. FOR DOUBLE DRIVE GATE INSTALLATION, PROVIDE CONCRETE CENTER DROP TO FOUNDATION DEPTH AND DROP ROD RETAINERS AT CENTER. LUBRICATE TO INSURE SMOOTH OPERATION AND VERIFY PROPER LATCH OPERATION.

CLEANING

A. REMOVE ALL CUTTING AND DRILLING CHIPS THAT ARE ATTACHED TO THE FENCING, POST, BRACKETS OR ADDITIONS TO PREVENT CORROSION.
B. REPAIR SCRATCHES AND OTHER INSTALLATION-INCURRED DAMAGE. USING A SPRAY PAINT OF THE APPROPRIATE COLOR THAT INCLUDES A ZINC ADDITIVE, REPAINT AND SEAL ANY SCRATCHES OR HOLES DRILLED IN THE FENCING, POST, BRACKETS, OR ADDITIONS TO PREVENT RUST FROM FORMING.
C. CLEAN UP DEBRIS AND UNUSED MATERIAL, AND REMOVE FROM SITE.

TABLE 1

MINIMUM POST SIZES FOR TITAN INDUSTRIAL

LINE OF FENCE POSTS	PANEL HEIGHTS
2.5” X 12 GA	UP TO & INCLUDING 6’ HEIGHT
3” X 12 GA.	7’ UP TO 10’

TABLE 2

TITAN INDUSTRIAL POST SPACING BY BRACKET TYPE

SPACING	FLAT TOP, SPEAR TOP, EXTENDED PICKET AND CURVED TOP 8’ NOMINAL (90.5” RAIL)							
POST SIZE	2.5”	3”	2.5”	3”	2.5”	3”	2.5”	3”
BRACKET TYPE	ONE DIRECTION FLAT MOUNT (EX-107)		TWO DIRECTION LINE (EX-207)		THREE DIRECTION UNIVERSAL (EX-307)		SWIVEL FLAT MOUNT (EXS-107)	
POST SETTINGS + 1/4”O.C.	95”	95.5”	95”	95.5”	95”	95.5”	95”	95.5”

TABLE 3

TITAN INDUSTRIAL GATE POSTS SIZES

GATE LEAF	GATE HEIGHT		
	UP TO & INCLUDING 6’	OVER 6’ UP TO & INCLUDING 8’	OVER 8’ UP TO & INCLUDING 10’
UP TO 4’	3” X 12 GA.	3” X 12 GA.	4” X 11 GA.
4’1” TO 6’	3” X 12 GA.	3” X 12 GA.	4” X 11 GA.
6’1” TO 8’	4” X 11 GA.	6” X 3/16” WALL	6” X 3/16” WALL

5 <u>INSTALLATION:</u>

A. FENCE POST SHALL BE SPACED AS SHOWN ON THE PLAN, PLUS OR MINUS 5/16". FOR INSTALLATIONS THAT MUST BE RAKED TO FOLLOW SLOPING GRADES, THE POST SPACING DIMENSION MUST BE MEASURED ALONG THE GRADE. FENCE PANELS SHALL BE ATTACHED TO POSTS WITH BRACKETS SUPPLIED BY THE MANUFACTURER. POSTS SHALL BE SET IN CONCRETE FOOTERS HAVING A MINIMUM DEPTH OF 36" (NOTE: IN SOME CASES, LOCAL RESTRICTIONS OF FREEZING WEATHER CONDITIONS MAY REQUIRE A GREATER DEPTH). THE "EARTHWORK" AND "CONCRETE" SECTIONS OF THIS SPECIFICATION SHALL GOVERN MATERIAL REQUIREMENTS FOR THE CONCRETE FOOTER. POSTS SETTING BY OTHER METHODS SUCH AS PLATED POSTS OR GROUTED CORE-DRILLED FOOTERS ARE PERMISSIBLE ONLY IF SHOWN BY ENGINEERING ANALYSIS TO BE SUFFICIENT IN STRENGTH FOR THE INTENDED APPLICATION.

A. SEALING EXPOSED SURFACES
TO SEAL THE EXPOSED STEEL SURFACES WHEN CUTTING/DRILLING RAILS OR POSTS, THE FOLLOWING STEPS SHALL BE PERFORMED: 1) REMOVE ALL METAL SHAVINGS FROM CUT AREA. 2) APPLY ZINC-RICH PRIMER TO THOROUGHLY COVER CUT EDGE AND/OR DRILLED HOLE; LET DRY. 3) APPLY 2 COATS OF CUSTOM FINISH PAINT MATCHING FENCE COLOR. FAILURE TO SEAL EXPOSED SURFACES PER STEPS 1-3 ABOVE WILL NEGATE WARRANTY. AMERISTAR SPRAY CANS OR PAINT PENS SHALL BE USED TO PRIME AND FINISH EXPOSED SURFACES; IT IS RECOMMENDED THAT PAINT PENS BE USED TO PREVENT OVERSPRAY. USE OF NON-MASTER HALCO PARTS OR COMPONENTS WILL NEGATE THE MANUFACTURERS' WARRANTY.

B. GATE INSTALLATION
GATE POSTS SHALL BE SPACED ACCORDING TO THE MANUFACTURERS' GATE DRAWINGS, DEPENDENT ON STANDARD OUT-TO-OUT GATE LEAF DIMENSIONS AND GATE HARDWARE SELECTED. TYPE AND QUANTITY OF GATE HINGES SHALL BE BASED ON THE APPLICATION; WEIGHT, HEIGHT, AND NUMBER OF GATE CYCLES. THE MANUFACTURERS' GATE DRAWINGS SHALL IDENTIFY THE NECESSARY GATE HARDWARE REQUIRED FOR THE APPLICATION. GATE HARDWARE SHALL BE PROVIDED BY THE MANUFACTURE OF THE GATE AND SHALL BE INSTALLED PER MANUFACTURER'S RECOMMENDATIONS.

C. CLEANING
THE CONTRACTOR SHALL CLEAN THE JOBSITE OF EXCESS MATERIALS; POST-HOLE EXCAVATIONS SHALL BE SCATTERED UNIFORMLY AWAY FROM POSTS.

6 METHOD OF MEASUREMENT

THE QUANTITY TO BE PAID FOR UNDER THIS ITEM SHALL BE THE NUMBER OF LINEAR FEET OF ORNAMENTAL FENCE SYSTEM (AS MEASURED HORIZONTALLY BETWEEN THE CENTERLINES OFTHE END POSTS ALONG THE TOP RAIL) PROVIDED IN ACCORDANCE WITH THE CONTRACT DOCUMENTS AND ORDERS OF THE ENGINEER.

7 BASIS OF PAYMENT

THE UNIT PRICE BID PER LINEAR FOOT SHALL INCLUDE THE COST OF FURNISHING ALL LABOR,

MATERIALS, TOOLS, EQUIPMENT AND INCIDENTALS NECESSARY TO SATISFACTORILY COMPLETE THE ENTIRE INSTALLATION INCLUDING (BUT NOT LIMITED TO) ALL POSTS, PIPE RAILS, FITTINGS (TEES, ELBOWS, CONNECTOR SLEEVES, FLANGES), CONCRETE FOOTINGS, STRUCTURAL ADHESIVE, SEMS SCREWS, THREADED TUBULAR RIVETS, THROUGH BOLTS, SLEEVE ANCHOR BOLTS AND TEMPLATES.

PAYMENT SHALL BE MADE UNDER THE APPROPRIATE ITEMS:

ITEM NO.	DESCRIPTION	UNIT
ITEM 506-S-6	6’ HT. STEEL FENCE	LF
ITEM 506-S-6-DG	6’ HT. STEEL DOUBLE GATE	EA
ITEM 506-S-4	4’ HT. STEEL FENCE	LF
ITEM 506-S-4-DG	4’ HT. STEEL DOUBLE GATE	EA
ITEM 506-S-4-SG	4’ HT. STEEL SINGLE GATE	EA
ITEM 506-S-2.5	2.5’ HT. STEEL FENCE	LF

ITEM 508-S - REPAINT BASKETBALL BACKSTOP

1. DESCRIPTION:

Under this Item, the Contractor shall prepare and paint existing basketball backstop including replaced pipes and hardware, in accordance with the plans, specifications, and directions of the Engineer.

2. MATERIALS:

The existing basketball backstop shall be painted after removals and rehabilitation have been performed to the framework and prior to installation of new chain link fabric.

The framework can be painted with the original fabric in place, if the fabric is not required to be replaced. The rehabilitated framework will consist of various quantities of weathered aluminum, weathered or rusty galvanized steel, and new galvanized steel components.

3. CONSTRUCTION:

The entire basketball backstop, both new and weathered components, shall receive three (3) coats of paint.

Immediately prior to painting, all surfaces of framework shall be thoroughly cleaned. All surfaces shall be cleaned in accordance with SP-1, Solvent Cleaning. Cleaning shall be performed with a solvent such as mineral spirits, xylol, or turpentine to remove all dirt, grease, and foreign matter. Surfaces that show evidence of loose mill scale, non-adherent rust, peeling paint and other deleterious matter shall be cleaned in accordance with SP-2, Hand Tool Cleaning, a method generally confined to wirebrushing, sandpaper, hand scrapers, or hand impact tools or SP-3, Power Tool Cleaning, a method generally confined to power wirebrushes, impact tools, power sanders, and grinders in order to achieve a sound substrate. Paint shall be applied immediately after a final SP-1 solvent cleaning and drying.

After the framework has been cleaned and prepared, it shall be painted as follows:

For New Galvanized Components, Aluminum and Previously Painted Surfaces in Sound Condition:

First Coat: Con-Lux Bond-Plex White Primer by Sherwin Williams Company, Woodside, NY, or approved equal. Primer is a water borne urethane, low luster coating having a dry film thickness of 1-1.5 Mills. Paint requires eighteen (18) hours drying time before recoating. Paint adhesion shall be 100% retention in accordance with ASTM D3359, classification 5B.

For Weathered or Rusty Steel:

First Coat: Sherwin Williams # E41N1 Metal Primer, as manufactured by Sherwin Williams Company, Woodside, NY, or approved equal. Primer is an alkyd oil, flat finish coating having a dry film thickness of 3 to 4 Mills. Paint requires 24 hours drying time before recoating. Performance shall meet or exceed the standards of Federal Specification TT- P-86H.

The entire base framework shall have two topcoats applied over the primer:

Second and Sherwin Williams Steel Master 9500 Silicone Alkyd Black, or approved equal. Topcoat Third Coat: is a silicon alkyd, high gloss coating having a dry film thickness of 2-4 mils. Paint requires 16 hours drying time

@ 45 F; 8 hours @ 77 F. Paint shall perform in accordance with ASTM G-53.

All paints shall be applied when ambient air temperature is 50 degrees F. and rising and surfaces to be painted are moisture free. No painting will be allowed below the minimum ambient air temperature.

In addition, no painting will be allowed below the temperature at which moisture will condense on surfaces.

APPLICATION OF PAINT:
All painting shall be done in a neat and workmanlike manner. The paint shall be applied by brush, and thoroughly worked into the surface and into all cracks and fissures without leaving fins or runs. Drop cloths shall be used to protect existing ground surfaces and adjacent appurtenances.

PAINT SUBSTITUTION:
A written request for paint substitution must be submitted to the Engineer. Contractor shall submit paint manufacturer's data sheets for approval of an equal product prior to application of paint.

4. MEASUREMENT AND PAYMENT:

The quantity of PAINT BASKETBALL BACKSTOP to be paid for under this item shall be the number of hoops prepared and painted in accordance with plans, specifications, and directions of the Engineer.

The price bid shall be a unit prices for EACH BASKETBALL BACKSTOP prepared and painted and shall include the cost of all labor, materials, equipment, and any incidentals necessary to complete the work in accordance with the plans and specifications, to the satisfaction of the Engineer.

ITEM 510-S – INSTALL EXISTING ALUMINUM BLEACHERS

1. DESCRIPTION:

   Under this item, the contractor shall INSTALL EXISTING ALUMINUM BLEACHERS at locations as shown on the drawings and/or as directed by the Engineer.

2. MATERIALS:

   A. Existing aluminum bleachers

   B. Mounting: Use 3/8" x 3" bolt for anchoring.

   C. Contractor to submit shop drawing of mounting detail and product information.

3. CONSTRUCTION DETAILS:
   Install bleacher in accordance to plans and details.
   Each bolt to be anchored into a 24"x24"x5" deep concrete slab installed below the unit pavers.

4. METHOD OF MEASUREMENT:
   The quantity to be paid for under this item will be measured by the number (EACH) EXISTING ALUMINUM BLEACHER installed in accordance with the plans, specifications and directions of the Engineer.

5. BASIS OF PAYMENT:
   The unit price bid per EACH EXISTING ALUMINUM BLEACHER shall include the cost of furnishing all labor, and tools, equipment and incidentals necessary to install this item, including excavation, and backfill, excluding the bleacher itself, all in accordance with the specifications and drawings.

END OF SECTION

ITEM 511-S – 4 SEATS - TABLE AND CHAIRS
ITEM 511-S – 2 SEATS - TABLE AND CHAIRS

1. DESCRIPTION:

Under this item the contractor shall Furnish and Install Tables and Chairs at locations as shown on the drawings and/or as directed by the Engineer.

2. MATERIALS:

A. Acceptable Manufacturer:

Company: DuMor Inc.
Model 78 from DuMor Model 78 Series.
Representative: Eileen Harrigan
Address: 38 Industrial Circle, Mifflintown. PA, 17059
Phone: 1-800-598-4018 Fax: 717-436-9839
Email: sales@dumor.com
Website: www.dumor.com

Or approved equal.

B. Table top assembly shall be manufactured from 1/4" thick ASTM A36 steel plate, 3/8" thick ASTM A36 steel plate, 3" x 4" nominal wood slats and 10 gauge ASTM B209 aluminum plate. Seat assembly shall be manufactured from 2 1/2" x 2 1/2" x 1/4" wall ASTM A500 steel tubing, 3/8" thick ASTM A36 steel plate and 3" x 4" nominal wood slats.

C. Finishes:
1. Steel Color: Standard Black,
2. Slats: Recycled Plastic slats – color to be "cedar"

D. Mounting: Standard in footing as shown on drawings.

E. Model # 78-32PL for 2 Seat Option without game board
Model # 78-34PL for 4 Seat Option without game board

F. Submittals:
1. Product literature
2. CAD drawings
3. Made in the USA Statement
4. Proprietary information
5. Samples – submit manufacturer's color sample, standard or custom
6. Warranty – submit manufacturer's standard warranty

3. EXECUTION:

The installation shall be as per manufacturer's instructions and in accordance with the Plans and Details and/or as directed by the Engineer.

4. METHOD OF MEASUREMENT:

The quantity to be paid for under this item will be per TABLE AND CHAIRS installed (EACH) measured in place and accepted in accordance with the specifications and drawings.

5. BASIS OF PAYMENT:

The unit price bid per EACH TABLE AND CHAIRS shall include the cost of furnishing all labor, materials, and tools, equipment and incidentals necessary to install this item, including excavation, backfill, and concrete footings, all in accordance with the specifications and drawings.

Payment shall be made under the appropriate Items:

Item No.	Description	Unit
Item 511-S-4	Table and Chairs – 4 Seats	EA
Item 511-S-2	Table and Chairs – 2 Seats	EA

END OF SECTION

ITEM 512-S – ALUMINUM BLEACHERS

1. DESCRIPTION:

   Under this item, the contractor shall Furnish and Install ALUMINUM BLEACHERS at locations as shown on the drawings and/or as directed by the Engineer.

2. MATERIALS:

   A. Acceptable Manufacturer:

      1. Company: National Recreation Systems, Inc.
      2. Model Number NB: 0315ASTD Non Elevated 3 Row by 15' Bleacher
      3. Representative: Erica Peritore
      4. Address: 1300-D Airport North Office Park Fort Wayne, IN 46825
      5. Phone: 888.568.9064
      6. Email: sales@bleachers.net
      7. Website: http://www.bleachers.net
      8. Or approved equal

   B. Seats: Nominal 2" x 10" anodized aluminum with anodized end caps.

   C. Treads: Nominal one (1) 2" x 10" mill finish aluminum with anodized end caps on rows 2 & 3.

   D. Mounting: Use 3/8" x 5" bolt for anchoring to concrete pad as per manufacturer's instructions and as shown in the plans and details.

3. CONSTRUCTION DETAILS:

   Install bleacher in accordance to manufacturer's instructions and shop drawings.

4. METHOD OF MEASUREMENT:

   The quantity to be paid for under this item will be measured by the number (EACH) ALUMINUM BLEACHER installed in accordance with the plans, specifications and directions of the Engineer.

5. BASIS OF PAYMENT:

   The unit price bid per EACH ALUMINUM BLEACHER shall include the cost of furnishing all labor, materials, and tools, equipment and incidentals necessary to install this item, including excavation, backfill, and concrete pad, all in accordance with the specifications and drawings.

END OF SECTION

ITEM 513-S – DECORATIVE BENCH

1. DESCRIPTION:

   Under this item, the Contractor shall install DECORATIVE BENCHES at locations as shown on the drawings and/or as determined by the Engineer.

2. MATERIAL:

A. Benches shall be model EV28,
   Everett series, manufactured by
   Keystone Ridge Designs,
   670 Mercer Road, Butler, PA,
   16001. 1-800-284-8208 Fax: 724-284-1253,
   Website: www.keystoneridgedesigns.com

B. Finish: Keyshield ® polyester powder coat finish to a 7-15 mil. Thickness.

C. Color: Gloss Black, RAL: 38/80010.

D. Mounting: as shown on drawings and details. The anchoring bolts shall be 3/8" diameter and 6" long stainless steel or Hilti bolts as per manufacturer's instructions.

E. Or approved equal.

3. CONSTRUCTION:
   The installation shall be as per manufacturer's instructions and or as shown on Plans, Details, Specifications and/or as ordered by the Engineer.

4. METHOD OF MEASUREMENT:
   The quantity to be paid for under this item will be measured by the number (EACH) DECORATIVE BENCH installed in accordance with the plans, specifications and directions of the Engineer.

5. PAYMENT:
   The unit price bid per EACH DECORATIVE BENCH shall include the cost of furnishing all labor, materials, and tools, equipment and incidentals necessary to install this item, including excavation, backfill, and concrete footing slab, all in accordance with the specifications and drawings.

END OF SECTION

ITEM 514-S-1– IN-GROUND MOUNT - SPORTS BENCH
ITEM 514-S-2 – SURFACE MOUNT - SPORTS BENCH

1. DESCRIPTION:

Under this item, the Contractor shall install SPORTS BENCHES at locations as shown on the drawings and/or as determined by the Engineer.

2. MATERIAL:

A. Benches shall be model number: BE-DD00800
8' long backless bench with aluminum legs for permanent installation
Company: National Recreation Systems
Address: 130-D Airport North Office Park, Fort Wayne, IN 46825 Phone:
1-888-568-9064, Fax: 260-482-7449
Email: sales@bleachers.net
Website: www.bleachers.net

B. Mounting: Standard in footing and/or surface mount as shown on drawings.

C. Or approved equal.

3. CONSTRUCTION:

The installation shall be as per manufacturer's instructions and or as shown on Plans, Details, Specifications and/or as ordered by the Engineer.

4. METHOD OF MEASUREMENT:

The quantity to be paid for under this item will be measured by the number (EACH) SPORTS BENCHES installed in accordance with the plans, specifications and directions of the Engineer.

5. PAYMENT:

The unit price bid per EACH SPORTS BENCHES shall include the cost of furnishing all labor, materials, and tools, equipment and incidentals necessary to install this item, including excavation, backfill, and concrete footings, and/or surface-mount hardware, all in accordance with the specifications and drawings.

Payment shall be made under the appropriate Items:

Item No.	Description	Unit
Item 514-S-1	Sports Bench – In-Ground Mount	EA
Item 514-S-2	Sports Bench – Surface Mount	EA

END OF SECTION

ITEM 515-S - GAME TABLE AND CHAIRS

1. DESCRIPTION:

Under this item the contractor shall Furnish and Install a GAME TABLE AND CHAIRS at locations as shown on the drawings and/or as directed by the Engineer.

2. MATERIALS:

A. CONCRETE GAME TABLES AND STEEL LEG shall be as manufactured Kenneth Lynch & Sons, Oxford CT, or approved equal.

Marble Aggregate: Marble chips for terrazzo inserts shall be clean, crushed marble free from dust and dirt and in sizes 1 and 2 mixed. White marble chips shall be similar and equal to "Plymouth White". Green marble chips shall be similar and equal to "Royal Green".

Cast Stone: Shall be standard-weight concrete consisting of Type I Portland cement, pigments, aggregates, admixtures and water to produce the following properties:

a. Compressive Strength: 5,000 psi minmum at 28 days.
b. Total Air Content: Not less than 4% nor more than 6%.

Concrete Footing: Concrete for the footing shall be Average Concrete as specified in Section B "Materials and Methods of Construction".

Reinforcement: Shall be as shown in details and plans

Steel Tube Support Leg: Steel tube support leg shall conform to ASTM A500.

Graffiti-Resistant Coating: Shall be Professional Water Sealant (P.W.S.) Coatings, as manufactured by Professional Products of Kansas, Inc., Wichita, KA, or approved equal.

B. SEATS shall be as manufactured by

Seat Model: # 78-32PL for 2 Seat Option – seats only, table excluded
Company: DuMor Inc.
Representative: Eileen Harrigan
Address: 38 Industrial Circle, Mifflintown. PA, 17059
Phone: 1-800-598-4018 Fax: 717-436-9839
Email: sales@dumor.com
Website: www.dumor.com

Or approved equal.

Finishes:

1. Steel Color: Standard Black,
2. Slats: Recycled Plastic slats – color to be "cedar"

Mounting: Standard in footing as shown on drawings.

3. SUBMITTALS:

Shop Drawings - Submit shop drawings of game table, including construction details, layout of game board, footing detail and all required installation details, as well as layout of table with steel leg in context to chair installation for review by the Engineer.

Graffiti Resistant Coating: Shall be submitted for approval prior to shop application. Coating substitution will not be accepted unless a written request is submitted to the Engineer. The Contractor shall submit manufacturer's Data Sheets and installation instructions for approval of any proposed-as- equal product no less than two (2) weeks prior to application.

Certificate: A certificate on manufacturers' letterhead with suppliers original signature shall be submitted to verify that the Graffiti Resistant coating was shop applied per the technical specification.

Samples – submit manufacturer's color sample, standard or custom

Warranty – submit manufacturer's standard warranty

4. EXECUTION:

Table Top: The tables shall be of pre-cast reinforced stone concrete with terrazzo inserts. All profiles, lines, corners and edges shall be made as shown on the Plans. The pre-cast tables shall be made by an approved manufacturer having facilities for furnishing the quality of cast stone required.

Proportioning of Aggregate: Proportioning of aggregates for pre-cast stone concrete shall be within the following limits, with a constant water-cement ratio not to exceed six (6) gallons per bag (94 lbs.) of cement. Basic aggregate proportions shall be one (1) cubic foot cement to one and three-quarters (1-3/4) cubic feet sand to two (2) cubic feet gravel or crushed stone with average (wet) sand and gravel, and loose materials.

To the above mixture only sufficient water shall be added to produce a workable mix, and in no case shall added water exceed the following, nor shall the total free water, including mechanically held water, exceed six (6) gallons per bag of cement.

Condition of Aggregate	Maximum Allowable Added Water
-Very wet sand and gravel	3-3/4 gals. per bag
-Wet (average) sand and gravel	4 gals. per bag
-Moist or damp sand and gravel	4-1/2 gals. per bag

The ratio of sand to gravel may be varied sufficiently to produce workable mixes with aggregate conforming to the requirements of this specification, but in no case shall the cement content be less

than eight (8) 94 lb. bags per cubic yard of concrete nor shall the water-cement ratio exceed six (6) gallons per bag in the final mix with allowance for entrained water as noted above.

Admixtures: The use of calcium chloride as an accelerator will be permitted, but shall not exceed two
(2) per cent of the cement content of the mix by weight. Calcium chloride shall be thoroughly dissolved in the mixing water before the addition to the mix, and the total water content must be regarded as part of the mixing water.

Mixing: Aggregate, including cement, shall be thoroughly mixed in an approved type mechanical batch mixer, before and after the addition of the mixing water. Concrete shall be placed in forms as soon as practicable after mixing, but in no case later than thirty (30) minutes after mixing has ceased.

Remixing or retempering of partially set or segregated concrete will not be permitted.

Compacting: Concrete during and immediately after placing in non- leakable forms shall be carefully compacted by means of rods or other implements, and by tapping or vibrating forms so as to fill completely all corners, and around all reinforcing steel and inserts to produce finished work which shall be dense, uniform in color and texture and free from honeycomb.

Reinforcing: Reinforcing steel shall be carefully formed and placed in the concrete in accordance with the Plans.

Curing: Concrete work after the removal of forms shall be kept moist and cured by continuous dampening for a period of at least two (2) weeks.

Concrete Finish: All exposed concrete except tops of tables shall be finished with a steel trowel to a "slick" finish except when the method of manufacture will not permit trowelling, when a finish satisfactory to the Engineer may be used. All form marks on exposed surfaces shall be rubbed to a smooth, even finish. The exposed surfaces shall be smooth, uniform and dense, free from cement film, cement wash or patching, and all other surface defects.

Terrazzo Inlays: Sinkages shall be left in the table tops for inlaying terrazzo checker boards. Sinkages shall be one (1") inch deep, perfectly square and lined with No. 12 gauge brass anchor type

The bottom of each sinkage shall be spread with one half (1/2") inch thick bed of 1 to 3 Portland Cement mortar into which shall be set a grillage of No. 20 gauge brass anchor type terrazzo strip to form pattern shown on Plans. The pattern shall be made by filling alternate spaces with white and light green terrazzo composed of White Portland Cement, colored as required, and marble chips.

White Terrazzo shall be composed of White Portland Cement and white marble chips, to make as nearly as possible a uniformly toned surface approaching pure white. Green Terrazzo shall be composed of White Portland Cement colored to a bright green with mineral mortar color, and green marble chips, as herein before specified. Terrazzo shall be thoroughly compacted after being

trowelled smooth and shall be sprinkled with additional marble chips of the proper color, tamped in until the surface can hold no more chips. Terrazzo shall be seasoned for six (6) days under a layer of wet sand or saw dust.

After seasoning or terrazzo inlay, the entire top surface of the table shall be ground down to a perfectly smooth and true plane, free from all surface defects and then washed clean.

Galvanizing: After fabrication with base and top plates, leg shall be hot-dipped galvanized with two (2) ounces of zinc per square foot as per ASTM A120 prior to being painted.

Graffiti-Resistant Coating: The table surface shall be clean, dry and free from oil, dirt, grease, efflorescence or any other coating which may inhibit penetration and adhesion of graffiti resistant coating. Allow surfaces to cure for a minimum of 28 days before application of graffiti resistant coatings. Two coats of graffiti-resistant coating shall be shop applied per manufacturer's application instructions. All exposed surfaces of table (except post) shall be anti-graffiti-coated. Coatings shall be applied thoroughly and evenly using either spray, roller or brush, leaving no skips or inadequately covered areas on the surfaces. Allow the first coat to dry to the touch prior to applying the second coat.

Grounds for Rejection of the Graffiti-Resistant Coating: Roller marks, flash lines, gaps or pin holes in excessive quantities will be considered grounds for rejection of table.

Steel Tube Support Leg: After fabrication with base and top plates, leg shall be hot-dipped galvanized with two (2) ounces of zinc per square foot as per ASTM A120.

Painting Support Leg: The support leg shall receive three (3) coats of paint. Immediately prior to painting, all surfaces of the leg shall be thoroughly clean. All surfaces that are rust free shall be cleaned in accordance with SP-1, Solvent Cleaning. Cleaning shall be performed with a solvent such as mineral spirits, xylol or turpentine to remove all dirt, grease and foreign matter. Surfaces that show evidence of scale and rust shall be cleaned in accordance with SP-2, Hand Tool Cleaning, a method generally confined to wirebrushing, sandpaper, hand scrapers or hand impact tools or SP-3, Power Tool Cleaning, a method generally confined to power wirebrushes, impact tools, power sanders and grinders in order to achieve a sound substrate. After the leg has been cleaned and prepared, it shall be painted as follows:

> First Coat (Shop Applied): Sherwin Williams # Kem Bond® HS Metal Primer, B50NZ3, red oxide, as manufactured by Sherwin Williams Company, Woodside, NY, or approved equal.. Primer is an fast drying, 81% ± 2% weight solids, low VOC, rust inhibiting, modified alkyd metal primer with a dry film thickness of 3-4 mils. Paint requires two and a half (2 ½) hours drying time before recoating (with alkyds). Performance shall meet or exceed the standards of Federal Specification TT-P-86H, Type III and IV, and TT-P-664D.
>
> Second Coat and Third Coats (Field Applied):::: Sherwin Williams Steel Master 9500 Silicone Alkyd # B56-300, Black, or approved equal. Topcoat is a VOC compliant silicone alkyd high gloss coating having a dry film thickness of 2-4 mils (each coat). Paint requires eighteen(18) hours drying time @ 77 degrees F.

All paints shall be applied when ambient air temperature is 45 F minimum and rising. No painting will be allowed below the minimum ambient air temperature. Surfaces to be painted shall be moisture free. In addition, no painting will be allowed below the temperature at which moisture will condense on surfaces. Refer to the Dew Point Chart in Section C, Article 16 to find the minimum allowed moisture free temperature.

Grounds for Support Leg Rejection: Roller marks, flash lines, gaps or pin holes in excessive quantities will be considered grounds for rejection of table.

The tables shall be placed accurately in location, plumb, level and game direction. Game direction shall be oriented so that a person seated at the game table will have a white square in the lower right hand corner of the board. The tables shall be wedged up and braced to maintain that position during pouring and setting of the footing.

Seating: The installation of the seats shall be as per manufacturer's instructions and in accordance with the Plans and Details and/or as directed by the Engineer. Seats shall be installed opposite of eachother next to the table and to the dimensions as shown in the Details.

5. METHOD OF MEASUREMENT:

The quantity to be paid for under this item will be per GAME TABLE AND CHAIRS installed (EACH) measured in place and accepted in accordance with the specifications and drawings.

6. BASIS OF PAYMENT:

The price bid shall be a unit price for EACH GAME TABLE AND CHAIRS furnished and installed, and shall include the cost of all labor, materials and equipment, including shop drawings, footing, steel bar reinforcement, excavation, graffiti-resistant coating, painting support leg, and all other incidental expenses necessary to complete the work in accordance with the Plans and Specifications to the satisfaction of the Engineer

ITEM 516-S-1 – PICNIC TABLES
ITEM 516-S-2 – PICNIC TABLES - ACCESSIBLE

1. DESCRIPTION:

Under this item, the contractor shall Furnish and Install PICNIC TABLES at locations as shown on the drawings and/or as directed by the Engineer.

2. MATERIALS:

A. Acceptable Manufacturer:

Company: Victor Stanley, Inc.
Representative: Danna Stanford
Address: P.O. Drawer 330, Dunkirk, MD 20754 USA
Phone: (301) 855-8300 Fax: (410) 257-7579
Email: sales@victorstanley.com
Website: http://www.victorstanley.com

B. Model ST-6 from the Homestead Collection for standard picnic table

B. Model ST-8 from the Homestead Collection for ADA accessible picnic table

C. 2” x 4” recycled plastic slats; 1-1/2” x 2-1/2” tubular steel

D. Finish:

1. Steel Color: Black,
2. Slats: Recycled Plastic – color to be IPE

E. Mounting: Standard in footing as shown on drawings.

F. Or approved equal

G. Submittals:

1. Product literature
2. CAD drawings
3. Made in the USA Statement
4. Proprietary information
5. Samples – submit manufacturer’s color sample, standard or custom
6. Warranty – submit manufacturer’s standard warranty

3. EXECUTION:

The installation shall be as per manufacturer’s instructions and in accordance with the Plans and Details and/or as directed by the Engineer.

4. METHOD OF MEASUREMENT:

The quantity to be paid for under this item will be per PICNIC TABLE installed (EACH) measured in place and accepted in accordance with the specifications and drawings.

5. BASIS OF PAYMENT:

The unit price bid per EACH PICNIC TABLE shall include the cost of furnishing all labor, materials, and tools, equipment and incidentals necessary to install this item, including excavation, backfill, and concrete footings, all in accordance with the specifications and drawings.

Payment shall be made under the appropriate Items:

Item No.	Description	Unit
Item 516-S-1	Picnic Table – 6 feet	EA
Item 516-S-2	Picnic Table – 8 feet accessible	EA

END OF SECTION

ITEM 517-S – BBQ GRILL

1. DESCRIPTION:
   Under this item, the Contractor shall install BBQ GRILLS at locations as shown on the drawings and/or as determined by the Engineer.

2. MATERIAL:
   A. Acceptable Manufacturers: Ultra Site

      Model Number: 632
      1675 Locust Street
      Red Bud, IL 62278, 618-282-8200, Fax: 618-282-8202
      Website: www.ultra-site.com
      Email: info@ultra-site.com

   B. Or approved equal

   C. Grill measures 20-1/6"L x 18-5/16"D x 40"H

   D. Grill rotates a full 360 degrees, cantilever cooking grate

   E. Durable rust-resistant, high temp, black powder coated firebox

   F. All MIG welded 7 ga. Base plate with 10 ga. Side walls

   G. Finish: Powder coat, Color: Standard Black

   H. Mounting: In ground

3. CONSTRUCTION:
   The installation shall be as per manufacturer's instructions and or as shown on Plans, Details, and Specifications and/or as ordered by the Engineer.

4. METHOD OF MEASUREMENT:
   The quantity to be paid for under this item will be measured by the number (each) BBQ GRILL installed in accordance with the plans, specifications and directions of the Engineer.

5. PAYMENT:
   The unit price bid per EACH BBQ GRILL shall include the cost of furnishing all labor, materials, and tools, equipment and incidentals necessary to install this item, including excavation, backfill, and concrete footings, all in accordance with the specifications and drawings.

END OF SECTION

ITEM 518-S –BIKE RACK

1. DESCRIPTION:
   Under this item, the contractor shall furnish and install steel BIKE RACK at locations as shown on the drawings and/or as directed by the engineer.

2. MATERIALS:
   A. Acceptable Manufacturer: DuMor, Inc.

      Bicycle rack model 293-00/S-2
      Representative: Eileen Harrigan
      Address: 138 Industrial Circle, Mifflintown. PA, 17059. USA
      Phone: 1-800-598-4018 Fax: 717-436-9839
      Website: http://www.dumor.com

   B. Materials: Rack assembly shall be manufactured from 2" x 2" x 11 gauge ASTM A513 steel tubing, and 3/8" thick ASTM A36 steel plate.

   C. Mounting Methods: Anchor Stainless steel expansion anchors (4) Anchors for each rack, see plans and details for measurements.

   D. Finish to be powder coated, color to be Standard Black

   E. Or approved equal.

   F. Submittals:
      1. Product literature
      2. Shop drawings
      3. Made in the USA Statement
      4. Proprietary information
      5. Samples – submit manufacturer's color sample, standard or custom
      6. Warranty – submit manufacturer's standard warranty

3. EXECUTION:
   A. The installation shall be as per manufacturer's instructions and as shown and detailed on the Plans, Specifications and/or as instructed by the Engineer.

   B. Installation of bike rack shall be surface mount.

   C. It is the responsibility of the installer to ensure that all base materials into which the rack will be installed can support the rack and will not be damaged by any required installation procedures.

4. METHOD OF MEASUREMENT:

The quantity to be paid for under this item will be per BIKE RACK installed (EACH) measured in place and accepted in accordance with the specifications and drawings.

5. BASIS OF PAYMENT:
   The unit price bid per EACH BIKE RACK shall include the cost of furnishing all labor, materials, and tools, equipment and incidentals necessary to install this item, including excavation, backfill, and concrete footings slab, all in accordance with the specifications and drawings.

END OF SECTION

ITEM 519-S – LITTER RECEPTACLE

1. DESCRIPTION:
   Under this item, the contractor shall furnish and install LITTER RECEPTACLES at locations as shown on the drawings and/or as directed by the Engineer.

2. MATERIALS:

   A. Acceptable Manufacturers:

      1. Keystone Ridge Designs
      2. Model: EV3-24E Everett Litter Receptacle 24 gal
      3. Address: 670 Mercer Road, Butler, PA, 16001.
      4. Phone: 1-800-284-8208 Fax: 724-284-1253, Website: www.keystoneridgedesigns.com

   B. Materials: Welded commercial graded steel.

   C. Finish:Keyshield ® polyester powder coat finish applied to a 1-15 mil thickness

   D. Color: Gloss Black, RAL: 38/80010.

   E. The anchoring bolts shall be 3/8" diameter and 6" long stainless steel or Hilti bolts as per Manufacturer's instructions.

   F. Litter receptacle shall be surface mounted on a concrete pad as shown in the construction documents.

   G. Or approved equal.

   H. Submittals:

      1. Product literature
      2. Shop drawings
      3. Made in the USA Statement
      4. Proprietary information
      5. Samples – submit manufacturer's color sample, standard or custom
      6. Warranty – submit manufacturer's standard warranty

3. EXECUTION:
   The installation shall be as per manufacturer's instructions, and as shown on the Plans, Specifications and/or as ordered by the Engineer.

4. METHOD OF MEASUREMENT:
   The quantity to be paid for under this item will be per litter receptacle installed (EACH) LITTER RECEPTACLES measured in place and accepted in accordance with the specifications and drawings.

5. BASIS OF PAYMENT:
   The unit price bid per EACH LITTER RECEPTACLES shall include the cost of furnishing all labor, materials, and tools, equipment and incidentals necessary to install this item, including excavation, backfill, and concrete footing slab, all in accordance with the specifications and drawings.
   .

END OF SECTION

ITEM 520-S DRINKING FOUNTAIN WITH BOTTLE FILLER

1. DESRIPTION

Under these items, the Contractor shall provide all labor, materials, and equipment necessary or required to furnish and install DRINKING FOUNTAIN WITH BOTTLE FILLER including concrete foundation, all internal plumbing, access panels and all external plumbing work and connection to water service and drain within five feet (5') of the tubular body, all in accordance with the plans, specifications, and directions of the Engineer.

2. MATERIALS:

Broken Stone Base: Shall consist solely of crushed ledge rock. Stone shall be no. 3 size and shall be of approved size and quality as specified in ITEM 121 DRYBOUND BASE COURSE.

Geotextile –Drainage: shall be FX-60HS (nonwoven) as manufactured by 160N (nonwoven) by Mirafi, Inc., Charlotte, NC, as specified in ITEM 158A GEOTEXTILE, or approved equal.

Polyethylene Vapor Retarder: shall be a Reinforced Vapor Retarder 3-ply laminate, combining 2 layers of high-density polyethylene and 1 high strength non-woven cord grid similar to Griffolyn Type-65 as manufactured by Reef Industries, Inc., Houston, Texas or approved equal.

Concrete Pad, Concrete Pipe Support and Cleanout: (for Bottle filler) Concrete shall be 3,200 psi Average Concrete.

Cleanout Manhole Cover and Frame: (for Bottle filler) shall be heavy duty cast iron per ASTM A48, latest revision Class 30 or better. Manhole cover shall be a locking cover with frame, similar to Pattern No. 1000010 as manufactured by Campbell Foundry, Harrison, NJ or approved equal. See Hardware: paragraph.

Sand: surrounding cleanout shall be cushion sand.

Drain pipe: Shall be cast iron.

Cleanout ferrule: Shall be similar to model # CO-380 cast iron cleanout with gasketed brass countersunk plug, no hub connection as manufactured by Watts Drainage products, Spindale, NC or approved equal.

Expansion Joint with Sealant: material shall be one of the following: A premolded bituminous fiber joint filler, as specified in Section "B" (requires a bond breaker and sealant) or, a premolded closed cell expanded polyethylene foam joint filler, such as MasterSeal 920 by BASF Inc., Shakopee, MN (requires only sealant) or, an approved equal of any of the above. If bituminous fiber material is used, a bond breaker such as one-half inch (1/2") width polyethylene tape or five-eighths inch (5/8") diameter expanded polyethylene foam backer rod shall be installed as recommended by manufacturer. A bond breaker will not be required for a premolded foam joint or a shredded recycled rubber aggregate joint filler, but sealant is always required.

Prepared expansion joints shall be coated with a primer followed by installation of a bond breaker and a self-leveling two- component polyurethane-based elastomeric sealant. The Contractor shall apply Sikaflex 429 primer with Sikaflex - 2C SL sealant, manufactured by Sika Corp., Lyndhurst, N.J; or BASF MasterSeal P 173 with MasterSeal SL 2 sealant, by BASF, Inc., Shakopee, MN, or approved equal. Color of sealant shall be concrete gray. Asphalt cement will not be approved as a sealant.

Precast Concrete plumbing pit: (for Bottle Filler w/Hi-lo Drinking Fountain Basins) The Concrete Plumbing Pit shall be precast, manufactured by Key Cast Stone Company, Inc., Amityville, NY, Pro Concrete Precast, Jamaica, NY, or approved equal.

Cement: Air entrained Portland cement shall comply with the requirements of the ASTM Designation C150. It shall be Type IIA, moderate sulfate resistant.

Cast stone shall have a compressive strength of not less than forty-five hundred (4,500) pounds per square inch when tested as 2" x 2" x 2" cubes at an age of not more than twenty-eight (28) days and shall have an absorption rate not to exceed seven (7%) percent of the dry weight after being dried to constant weight at 150 degrees Fahrenheit. No chipped, broken, or checked stone showing fine hair cracks or checks on the surface will be accepted.

Aggregate: Natural Sand and gravel shall conform to the requirements of ASTM C33. Calcium Chloride:

Do not use calcium chloride in precast concrete.

Reinforcing Bars: ASTM A 615, Grade 40 or Grade 60 as necessary. Bars are to be used to handle transportation and handling stresses.

Welded Wire Fabric: Shall meet ASTM A1064/1064M.

Supports for Reinforcement: Provide supports for reinforcement including bolster, chairs, spacers, and other devices for spacing, supporting, and fastening reinforcing.

Miscellaneous Iron and Steel: Access into the concrete plumbing pit shall be via a two (2') foot diameter ductile cast iron frame and “Parks Leaf” manhole cover as shown on contract plans. Manhole Covers shall be of gray iron per ASTM A48, latest revision, Class 30 or better. Covers shall be as manufactured by Campbell Foundry Co., Harrison NJ or EJ USA, Inc., East Jordan, MI or approved equal. All covers shall be suitable for highway traffic, meeting the requirements for heavy duty H-20 loading, per AASHTO M306-10.

Hardware: Each cover shall be furnished with two (2) Stainless Steel Penta-Head bolts as supplied by Campbell Foundry Co., Harrison, NJ, or approved equal. Typical plastic end caps are to be supplied with hardware and installed on Penta-Head bolts.

Drinking Fountain with Bottle Filler: Shall be Model #10145-SM as manufactured by Most Dependable Fountains, Inc. Arlington, TN, or approved equal.

Manufacturer’s identification-shall be displayed discreetly on the unit’s access panel to facilitate ordering replacement parts.

Sensor operated bottle filler and freeze resistant valves are Not required under this specification.

Tubular Body: Shall be either pipe or tubular steel or fabricated 304 stainless steel, 12 gauge or better.

Access covers: shall be located for easy access to facilitate maintenance and replacement of parts and shall be fastened with vandal resistant stainless steel screws.

Surface mount: Shall be either stainless steel mount or optional stainless steel surface carrier.

Corrosion Resistant Treatment: All fabrication and welding shall be completed prior to application of the corrosion resistant coating, metal pieces shall be cleaned of all weld spatter, mill scale, varnish, rust, grease, and the like and the surface mechanically and chemically prepared to receive the coating. This corrosion resistant coating shall be a thermal spray zinc coating or electrostatic or immersion applied primer with a minimum thickness of 3 mils. All metal pieces, including Welds, shall receive the coating inside and out.

Polyester Powder Coating: A surface coat shall be applied to the thermal zinc coated metal pieces in such a manner that the coating will not peel off. The manufacturer shall perform all processes required to achieve a smooth material bond. An epoxy or acrylic polymer primer shall be applied prior to application of powdercoating. The surface coat shall be an electrostatically sprayed, lead- free, superdurable TGIC (triglycidyl isocynanurate) polyester powder coating applied to a minimum of three (3) mils thickness which shall be oven cured. The TGIC polyester powder coating shall be UV resistant and comply with the ASTM standards.

Material manufacturer's directions for storage and use shall be adhered to. Material surfaces shall be protected during shipment so as to arrive mar and scratch free in the field.

Color- shall be Blue, Green, Black or Silver/Gray, as shown on the drawings and/or as selected by the Landscape Architect. Where Silver/Gray color is specified, satin finish stainless steel (without powder coating) may be substituted.

Hardware: All hardware, fittings, and fastenings shall be tamper resistant 18-8 stainless steel, type 304 in accordance with ASTM F593 of sizes as indicated on the shop drawings and as required to complete the installation. Anchor bolts shall be minimum 3/8 inch, ten (10") inches long and may be either stainless steel or galvanized steel, quantity as required by the manufacturer.

Bubbler Head: Bubblers shall be rounded one piece design, vandal-resistant type, certified to be lead-free. Bubblers may be either 18-8 stainless steel type 304 or chrome plated cast brass.

Push Button: Shall be stainless steel valve body with a 1 ½" diameter feather touch vandal resistant push button. Push button for bottle filler and accessible "lo" basin shall be activated by a maximum five (5) pounds of pressure, in compliance with ADA.

Stainless Steel Bowls: Shall be 18 gauge or better stainless steel, type 304, satin finish to comply with ASTM A380 and ASTM A967 standards, install with tamper proof stainless steel screws.

Waste Strainer: Shall be satin chrome plated brass or stainless steel waste strainer with a 1-1/4" O.D. tailpiece. Plastic waste drain/strainers are not acceptable.

Plumbing: The manufacturer shall have all factory installed plumbing components pre-tested installed before delivery to site. All factory connections to be made by a licensed plumber.

PLUMBING: The Contractor shall furnish and install all pipe, fittings, valves, and other foundries to complete the plumbing for the connections and concrete pit. The drain pipe shall be extended five (5) feet beyond the foundation and connected to the sanitary drain line or dry well, as shown on the plans. The one and one-quarter (1 1/4") inch cold water line shall be extended five (5') feet beyond the foundation and connected to the water supply pipe, as shown on the plans.

Connection to water supply shall be made with a threaded, extra heavy fitting. The Contractor shall provide dielectric fitting at appropriate locations, as shown on plan.

Water Piping: Water Piping shall be one and one-quarter (1 1/4") inch rigid hard temper type "K" copper tubing as shown on the plans meeting the specification for ASTM B88. Fittings shall be approved wrought copper and bronze solder-joint pressure fitting (A.N.S.I. B16.22).

Pipes through precast concrete plumbing pit wall shall be protected with a sleeve caulked watertight with a silicone sealant. All appurtenances such as 1 1/4" Gate Valve, 3/4" drain cock, reducer coupling and 3/8" pressure regulator valve shall be installed as per plans, and as directed by the Engineer.

Pipe Supports: Pipe clamps shall be made up of 1" x 3/8" strap iron galvanized and shall be constructed to rigidly hold the pipes firmly in place. Clamps shall be held in place with anchor bolts set in fountain shaft or base.

3. INSTALLATION:

Water supply and drainage lines shall be installed as shown on the detail and the plans. Prior to placement of concrete pad or precast concrete plumbing pit, the subgrade and broken stone shall be level and compacted. Concrete pad shall be a smooth, flat, broom finished surface installed flush with adjacent pavement grade and in accordance with the plans and details. Adjacent pavement shall be pitched away from bottle filler.

Bottle Filler: The unit is to be handled at lifting locations designated by the manufacturer; no chipped, cracked, or otherwise defective Bottle Filler will be acceptable.

The fixture shall be surface mounted and installed in accordance with the manufacturer's written directions. Entire assemblies shall be installed in accurate locations, square and plumb in concrete foundation and in required locations to surrounding finished grade, as shown on the plans. Anchor bolts shall be accurately set, plumb and true, in concrete foundation, quantity as recommended by the manufacturer.

Field connection: All field connections to be made by a Licensed Plumber, as per Section C, Special Provisions, Article 19. The factory installed portion of the cold water supply and waste water lines shall be extended from the Bottle Filler/Drinking Fountain Base at lengths indicated on the drawings. Water and Drain lines shall be pitched away from the Bottle Filler/Drinking Fountain. Pockets in rigid piping that

cannot be drained by gravity will be rejected. The plumber will be required to reinstall piping until gravity drain is achieved.

Winterization: The unit shall be winterized by shutting off water supply and opening bleeder valve (outside of fountain). The bottle filler, and drinking fountain basins shall be designed to allow internal water to drain by gravity.

SUBMITTALS:

Shop Drawings: The Contractor shall submit a catalogue cut and a complete dimensional Shop Drawing of the bottle filler showing all components including color, internal plumbing, access panels, gauges of metal and thickness of wall construction at least twelve (12) weeks prior to proposed installation.

Warrantee: The Manufacturer warrants that the bottle filler and accessory to be free from defects in material and workmanship under normal use for (1) year from date of installation or eighteen (18) months from date of shipment from the factory, whichever occurs first. Manufacturer's standard one year warrantee shall be submitted.

Operation and Maintenance Manual: The Contractor shall furnish an Operation and Maintenance (O & M) Manual prepared in conjunction with the manufacturers of equipment in this specification. The O & M manual shall contain the following:

1) Description of system operation.
2) Troubleshooting and Repair Guide.
3) List of parts with their model numbers.

4. MEASUREMENT AND PAYMENT:

For each BOTTLE FILLER furnished and installed in accordance with the plans, specifications, and directions of the Engineer, the Contractor shall receive the unit price bid.

The price bid shall be a unit price for DRINKING FOUNTAIN WITH BOTTLE FILLER and shall include the cost of all labor, materials, equipment, and incidentals necessary or required to complete the work including excavation, broken stone base, sand, polyethylene vapor retarder, geotextile, concrete, stainless steel anchor bolts, cleanout pipe, ferrule, manhole frame and cover, vandal resistant bolts, expansion joint with sealant, submittals, all components integral with the bottle filler, all plumbing work and connections to water and drain service within five (5') feet from the center of the tubular body, all in accordance with the plans and specifications, to the satisfaction of the Engineer.

521-S - FURNISH AND INSTALL MINIATURE SOCCER PITCH FIELD

1. DESCRIPTION:

Under this Item, the Contractor shall furnish all labor, tools, materials and equipment necessary to install a MINIATURE SOCCER PITCH FIELD as shown on the Plans and Details, and/or directed by the Engineer.

2. SUBMITTALS:

a. Contractor shall furnish detailed shop drawings for the MINIATURE SOCCER PITCH FIELD, including front and side sections/elevations, layout of field, fencing details, wall and goal details, – stamped and signed by a professional engineer licensed in the state of New York.
b. Contractor shall submit maintenance procedures
c. Color and material samples of all components of MINIATURE SOCCER PITCH FIELD to be submitted to the Engineer for approval.

3. MATERIALS:

a. The Contractor shall furnish and install custom designed MINIATURE SOCCER PITCH FIELD, as detailed in the Construction Documents, supplied and installed by a single source.

   A. Field size to be 40 foot x 65 foot
   B. Field shall be a synthetic turn field with 1 ¾ inch polyethylene turf fiber pile height, and durafill/ sandfill, anti-microbial, non-absorbent acrylic coated round sand infill.
   C. 4 foot high walls surrounding all four sides of field
   D. 2 goals - 6 foot by 4 foot
   E. 1 door portal
   F. 18 foot high corner posts with 16 foot high-end line netting
   G. 2 player benches
   H. 12 foot high side-line netting & 14 storage counterweight containers
   I. Delivery and installation
   J. 90 day wellness check

b. Acceptable Manufacturers: Urban Soccer Park

c. Contact: Austin Allison, Urban Soccer Park, 6663 S Eisenman Rd #130, Boise, ID, 83716; Tel: (415)-347-9895; Website: www.UrbanSoccerPark.com; Email: austin@urbansoccerpark.com

d. Or approved equal.

4. CONSTRUCTION DETAILS:

A. Install MINIATURE SOCCER PITCH FIELD where shown on Drawings and according to approved Shop Drawings.

5. METHOD OF MEASUREMENT

a. The total quantity to be paid under this Item shall be the supply and installation of EACH MINIATURE SOCCER PITCH FIELD.

6. BASIS OF PAYMENT

a. The unit bid price shall include, but not be limited to all necessary labor, insurance, shipping, consultant design fee, stamped shop drawings, material, and incidentals necessary to complete the work, including, but not limited to, fabrication and installation of MINIATURE SOCCER PITCH FIELD, concrete foundations, all excavation and backfilling, all in accordance with the plans, the specifications and the directions of the Engineer.

END OF SECTION

ITEM 522-S - TENNIS COURT ACCESSORIES SET

1. DESCRIPTION:

Under this Item, the Contractor shall furnish and install TENNIS COURT ACCESSORIES SET, in accordance with the plans, specifications, and directions of the Engineer.

2. MATERIALS:

Unless otherwise specified herein, all materials and methods of construction shall be in accordance with the plans, specifications and directions of the Engineer.

Post: Each set of Tennis Court Accessories shall consist of one (1) net with center strap anchor supported by two (2) posts. Posts shall be extra heavy weight Schedule 80 hot-dipped galvanized steel pipe of the sizes shown on the plans.

Fittings: The reducing collars, deck plates, covers at top, and tapered rings or sockets at bottom of setting sleeves shall be made of the best quality ductile cast iron, galvanized after threading and other necessary machining, secured as shown on the plans. All cleats and clamps for cables shall be made of best quality malleable cast iron, galvanized and secured with stainless steel machine screws.

Pulley Top: The pulley tops shall be of the best quality galvanized malleable cast iron, with pulley axles and fastening pins of stainless steel. Castings shall be perfectly sound and smooth and free from all flaws.

Net Tightener (Winch): The net tightener shall be powdercoated steel, as manufactured by Shelby, Model No, 5403, nine hundred pound (900 lb.) capacity, or approved equal.

Nets: Net size shall be forty-two feet (42') by three and one-quarter feet (3 1/4'). Mesh opening of nets shall not exceed one and three-quarter inch (1 3/4"). Mesh shall be fabricated of three strand twisted nylon cord with the top nine (9) rows double mesh. The headband, side and bottom bindings shall be extra heavy nylon reinforced vinyl or polyester fabric. The top hood shall be white, minimum two and one-half inches (2 1/2") wide and attached to the net with four (4) rows of heavy, polyester lock stitching. The side and bottom bindings shall be a minimum of one inch (1") wide and have a double row of heavy polyester lock stitching. The top cable supporting the net shall be a five (5) mm vinyl-coated galvanized or stainless steel cable.

The center strap shall be a two-inch (2") wide adjustable nylon strap with rustproof snap hook. The net shall be similar to Model #20103 Hercules Tennis Net as manufactured by Carron Net Co., Inc., Two Rivers, Wisconsin, or approved equal.

Anchor Box: The center strap anchor box shall conform to the standard details, as shown on the plans, and shall consist of a 1 5/8" by 10" galvanized pipe with ¼" pin set in concrete. The anchor box shall be similar to Catalogue VB24, as manufactured by Bison Recreational Products, Lincoln, NE, or approved equal.

3. CONSTRUCTION:

Posts shall be set in standard weight galvanized steel pipe sleeves of the sizes shown on the plans. Each sleeve shall be equipped with a deck plate of the size shown, for which an approved operating key shall be furnished by the Contractor. Posts shall be erected truly vertical.

Footings: Sleeves shall be set in concrete footings of the size and construction shown on the plans. The footings shall be erected on a crushed stone bed.

SHOP DRAWINGS: The Contractor shall submit shop drawings where required, in accordance with the requirements of the General Conditions, Section C, Special Requirements, Article 11.

EXTRA MATERIALS: The Contractor shall furnish (supply & deliver only, not install) extra materials and deliver to Nassau County Parks Department as follows:

One(1) - Extra tennis net. The tennis net shall meet the specification listed under the "MATERIALS" heading of this Item. The extra net shall be delivered in its original packaging from the manufacturer. This is in addition to the installed nets.

One (1) - Squeegee with an adjustable angle with extruded rubber blade. Blade to be 50 durometer rubber, 36" wide. Handle to be six feet (6') long.

Eight (8) - Supply eight (8) extra rubber durometer blades

4. MEASUREMENT AND PAYMENT:

The quantity of TENNIS COURT ACCESSORIES SET to be paid for under this Item shall be the number of sets furnished and erected complete, in accordance with the plans, specifications, and directions of the Engineer.

The price bid shall be a unit price for EACH set of Tennis Court Accessories furnished and installed and shall include the cost of furnishing all labor, materials, tools, equipment and other expenses necessary, including concrete footings, setting sleeves, excavation, crushed stone bed, net, posts, center strap and anchor box all in accordance with the plans and specifications to the satisfaction of the Engineer.

In addition, the Contractor shall deliver EXTRA MATERIALS as outlined above to Nassau County Parks Department. No additional payment shall be made for extra materials. The Contractor shall include the cost in the bid price.

END OF SECTION

ITEM 523-S – FLAGPOLE AND FOUNDATION

1. GENERAL:

Under this Item, the Contractor shall furnish all labor, tools, materials and equipment necessary to supply and install Flagpole as shown on plans or directed by the Client's representative.

2. MATERIALS:

A. Flagpole: Model # PT305A-CLR as manufactured by Pole-Tech Company Inc, 97 Gnarled Hollow Road, East Setauket, New York, 11733; Phone: (631) 689-5525, Fax: (631) 689-5528, Email: Info@poletech.com, or approved equal.

1. Exposed Height: 30 Feet
2. Pole: Cone tapered 6063-T6 seamless extruded aluminum
3. Finish: Clear Anodized Finish (CLR)
4. Foundation Tube: Standard Corrugated Steel Tube
5. Sleeve: PVC pipe foundation sleeve, made to fit

B. Submittals:

a. Submit two copies of manufacturer's shop drawings,
b. Detailed drawings of the pole footing stamped and signed by a Professional Engineer licensed in the State of New York
c. Maintenance procedures.
d. Guarantee documentation.

3. CONSTRUCTION DETAILS:

C. Install flagpole where shown and according to Shop Drawings and manufacturer's written instructions.

D. Place foundation tube center and brace to prevent displacement during concreting. Place concrete. Plumb and level foundation tube and allow concrete to cure. Install flagpole, plumb, in foundation tube.

E. The installation shall be in accordance with the Plans and Details and as per manufacturer's recommendations.

4. METHOD OF MEASUREMENT

The total quantity to be paid under this Item shall be the supply and installation of EACH Flagpole.

5. BASIS OF PAYMENT

The unit bid price shall include, but not be limited to all necessary labor, insurance, material, and incidentals necessary to complete the work, including, but not limited to, fabrication of the Flagpole, shipping, concrete foundations, rebars, all excavation and backfilling, and shop drawings, reviewed and stamped by a Structural Engineer, all in accordance with the plans, the specifications and the directions of the Engineer.

END OF SECTION

ITEM 524-S-A – FURNISH AND INSTALL SHADE STRUCTURES (PLAYGROUND)

ITEM 524-S-B – FURNISH AND INSTALL SHADE STRUCTURES (SEATING AREA)

1. GENERAL

1.1 RELATED DOCUMENTS

A. Drawings and general provisions of the Contract, including General Conditions and Division 1 Specification Sections, apply to this section.

1.2 SUMMARY

A. A single fabric shade structure manufacturer shall be responsible for the design, wet-stamped engineering drawings, fabrication, and supply of the fabric shade structure specified herein.

1.3 SUBSTITUTIONS

A. To qualify as an approved equal, please submit the following manufacturer, installer and product documentation at least ten days prior to the bid:
   a. 2 full sets of fabric samples
   b. Detailed material and performance specifications for ALL fabric, steel, hardware and cables used in shade structure
   c. 2 full sets of powder coating color metal “chips”
   d. List of at least 10 reference sites within 50 miles of bid location
   e. List of at least 10 customer references within 50 miles of bid location
   f. Proof of compliance with all quality assurance criteria, as per Section 1.5
   g. Full set of wet stamped (by an engineer in the state of New York engineering drawings for the proposed structures
   h. Proof of installation competency and/or certification for type and size of structure specified.
   i. List of any and all deviations from product specifications in section 2.1.

B. No substitutions will be allowed after the deadline. Any approval of alternate manufacturers and structures shall be by addendum prior to the bid date and shall not be allowed without written notification.

1.4 SUBMITTALS

1.4.1 With Bid Submittals:

A. Provide proof of existing reference sites with structures of similar project scope and scale, and that are engineered to IBC 2018 specifications.

B. Provide a minimum of 18 fabric samples to demonstrate fabric color range, and a digital (PDF) or paper document showing a minimum of 9 powder coat color choices. Also, provide a letter of authorization from the fabric manufacturer delineating authorized use of the specified fabric.

C. Manufacturer to provide proof of all quality assurance items, including;

1. A list of at least 5 reference projects in REGION that have been installed a minimum of 12 years.

2. Proof of current status as an ISNetworld Member Contractor.

1.5 QUALITY ASSURANCE

Fabrication and erection are limited to firms with proven experience in the design, fabrication, and erection of fabric shade structures, and such firms shall meet the following minimum requirements. No substitutions shall be allowed for the following:

A. A single shade structure manufacturer shall design, engineer and manufacture the shade structure.

B. All manufacturers shall have at least 15 years' experience in the design, engineering, manufacture, and erection of fabric shade structures, engineered to IBC requirements with similar scope, and a successful construction record of in-service performance.

C. Manufacturer shall be accredited by the IAS (International Accreditation Service) for Structural Steel Fabrication under IBC 2006 Section 1704.2.5.2.

D. The fabric shade structure contractor shall have a Corporate Quality Control program/manual, which describes their complete quality assurance program.

E. All manufacturers must be a current Member Contractor with ISNetworld, which confirms the bidder's strict adherence to Safety, Insurance, Quality, and Regulatory standards.

1.6 WARRANTY

A. The successful bidder shall provide a 12-month warranty on all labor and materials.

B. A supplemental warranty from the manufacturer shall be provided for a period of 10 years (pro-rated) on fabric and 10 years on the structural integrity of the steel, from date of substantial completion.

C. The warranty shall not deprive the Owner of other rights the Owner may have under the provisions of the Contract Documents, and will be in addition to and run concurrent with other warranties made by the Contractor under requirements of the Contract Documents.

2. MATERIALS

2.1 GENERAL

A. The structures shall consist of: Structure A – (6) 53'x53'x53' Joined 3-Point Sails (10', 12', 14', 16', 18', 20' Entry Heights), Structure B – (4) 40'x40'x40' Joined 3-Point Sails (10' & 16' Entry Heights), Structure C – (2) 40'x40'x40' Joined 3-Point Sails (10' & 16' Entry Heights). The columns shall be a minimum of 10" structural steel.

B. The structures shall be manufactured by Shade Structures, Inc., d/b/a USA SHADE & Fabric Structures, or approved equal

C. Contact:

Sal Romanello at Playsafe Playground Systems of NY, Inc.
Phone: (516) 677-9240
E-mail: playgroundman@msn.com

Angel Rich, Regional Sales Manager at USA Shade, Inc.
Phone: (954) 649-6757
E-mail: arich@usa-shade.com

D. The fabric shade structure(s) shall conform to the current adopted version of the International Building Code 2018.

E. All fabric shade structures are designed and engineered to meet the minimum of 115mph "Ultimate" Wind Load, Risk Category II, Exposure C, and a Live Load of 5psf. All fabric shade structures shall be engineered with a zero wind pass-through factor on the fabric.

F. Steel:

1. All steel members of the fabric shade structure shall be designed in strict accordance with the requirements of the "American Institute of Steel Construction" (AISC) Specifications and the "American Iron and Steel Institute" (AISI) Specifications for Cold-Formed Members and manufactured in a IAS- (International Accreditation Service) accredited facility for Structural Steel Fabrication under IBC 2006 Section 1704.2.5.2.

2. All connections shall have a maximum internal sleeving tolerance of .0625" using high-tensile strength steel sections with a minimum sleeve length of 6".

3. All non-hollow structural steel members shall comply to ASTM A-36. All hollow structural steel members shall be cold-formed, high-strength steel and comply with ASTM A-500-10, Grade B. All steel plates shall comply with ASTM A-572, Grade 50. All galvanized steel tubing shall be triple-coated for rust protection using an in-line electroplating coat process. All galvanized steel tubing shall be internally coated with zinc and organic coatings to prevent corrosion.

G. Bolts:

1. All structural field connections of the shade structure shall be designed and made with high-strength bolted connections using ASTM A-325, Grade B.
2. Where applicable, all stainless steel bolts shall comply with ASTM F-593, Alloy Group 1 or 2. All bolt fittings shall include rubber washers for water-tight seal at the joints. All nuts shall comply with ASTM F-594, Alloy Group 1 or 2.

H. Welding:

1. All shop-welded connections of the fabric shade structure shall be designed and performed in strict accordance with the requirements of the "American Welding Society" (AWS) Specifications. Structural welds shall be made in compliance with the requirements of the "pre-qualified" welded joints, where applicable and by certified welders. No onsite or field welding shall be permitted.

2. All full penetration welds shall be continuously inspected by an independent inspection agency and shall be tested to the requirement of IBC 2018.

I. Powder Coating:

1. Galvanized steel tubing preparation prior to powder coating shall be executed in accordance with solvent cleaning SSPC-SP1. Solvents such as water, mineral spirits, xylol, and toluol, which are to be used to remove foreign matter from the surface. A mechanical method prior to solvent cleaning, and prior to surface preparation, shall be executed according to Power Tool Cleaning SSPC-SP3, utilizing wire brushes, abrasive wheels, needle gun, etc.

2. Carbon structural steel tubing preparation prior to powder coating shall be executed in accordance with commercial blast cleaning SSPC-SP6 or NACE #3. A commercial blast cleaned surface, when viewed without magnification, shall be free of all visible oil, grease, dirt, mill scale, rust, coating, oxides, corrosion, and other foreign material.

3. Powder coating shall be sufficiently applied (minimum 3 mils thickness) and cured at the recommended temperature to provide proper adhesion and stability to meet salt spray and adhesion tests, as defined by the American Society of Testing Materials.

4. Raw powder used in the powder coat process shall have the following characteristics:
   a. Specific gravity: 1.68 +/- 0.05
   b. Theoretical coverage: 114 +/- 4ft^2/mil
   c. Mass loss during cure: <1%
   d. Maximum storage temperature: 80°F
   e. Interpon® 800 is a high-durability TGIC powder coating designed for exterior exposure. Tested against the most severe specifications, Interpon 800 gives significantly improved gloss retention and resistance to color change.

5. When the fabric shade structure(s) will be located within 10 miles of the ocean or in other potentially corrosive environments (pools, reclaimed water irrigation, other standing bodies of water) hot dip galvanizing of Carbon steel will be required

6. When fabric shade structures are within 10-15 miles rust protection undercoat primer will be required on all structures. Sherwin-Williams® POWDURA® epoxy powder coating Z.R Primer shall be applied to Carbon steel in accordance with the manufacturer's specifications. Primer should be fused only and then top coated with the selected powder coat to ensure proper inter-coat adhesion.

   a. The primer's attributes shall be:

a.	Specific gravity (g/ml):	2.37
b.	Coverage at 1.0 mil (ft^2/lb):	81.6
c.	Adhesion: ASTM D-3359	5B
d.	Flexibility: ASTM D-552	Pass 1/8"
e.	Pencil hardness: ASTM D-3363	H-2H
f.	Impact resistance (in.lb): ASTM D-2794	Dir & Rev, 120 in-lbs
g.	Salt spray resistance: ASTM B-117	2000 hours
h.	Humidity resistance: ASTM D-4585	2000 hours
i.	60° Gloss: ASTM D-523	50 ~ 70
j.	Cure schedule (metal temp):	10min @ 200°C (390°F) 25min @ 135°C (275°F)
k.	Film thickness range (mils):	2.0 ~ 3.0

K. Tension Cable: Steel wire rope cable is determined based on calculated engineering loads. Standard cabling is galvanized. Stainless steel cabling required when hot dip galvanized frame or primer frame are required.

1. 0.25" (nominal) galvanized 7x19 strand core wire rope shall be used for tension loads up to 4,500 lbs.

2. 0.375" (nominal) galvanized 7x19 strand core wire rope shall be used for tension loads up to 9,000 lbs.

3. 0.5" (nominal) galvanized 6x19 strand core wire rope shall be used for tension loads up to 13,500 lbs.

L. Fabric Roof Systems:

1. UV Shade Fabric:
   a. Shadesure® shade fabric is made of a UV-stabilized, high-density polyethylene (HDPE), as manufactured by Multiknit® (Pty) Ltd. HDPE mesh shall be a heat-stentered, three bar Rachel-knitted, lockstitch fabric with one monofilament and two tape yarns to ensure that the material will not unravel if cut. Raw fabric rolls shall be 9.8425 feet wide.
   b. Fabric Properties:
      ~ Life Expectancy: minimum 8 years with continuous exposure to the sun

~ Fading: minimum fading after 5 years (3 years for Red)
~ Fabric Mass: 5.31 oz/yd^2 ~ 5.6 oz/yd^2 (180gsm ~ 190gsm)
~ Fabric Width: 9.8425 feet (3m)
~ Roll Length: 164.04 feet (50m)
~ Roll Dimensions: 62.99 inches x 16.5354 inches (160cm x 42cm)
~ Roll Weight +/- 66 lbs (+/- 30kg)
~ Minimum Temp: -13°F (-25°C)
~ Maximum Temp: +176°F (80°C)

c. Fabric shall meet the following flame spread and fire propagation tests:
   1) ASTM E-84
   2) NFPA 701 Test Method 2

2. Stitching & Thread:
   a. All sewing seams are to be double-stitched.
   b. The thread shall be GORE® TENARA® mildew-resistant sewing thread, manufactured from 100% expanded PTFE (Teflon™). Thread shall meet or exceed the following:
      1) Flexible temperature range
      2) Very low shrinkage factor
      3) Extremely high strength, durable in outdoor climates
      4) Resists flex and abrasion of fabric
      5) Unaffected by cleaning agents, acid rain, mildew, salt water, and is unaffected by most industrial pollutants
      6) Treated for prolonged exposure to the sun
      7) Rot resistant

3. Shade and UV Factors:
   a. Shade protection and UV screen protection factors shall be as follows:

Color	Shade %	UV Block %
Laguna Blue	91%	96%
Royal Blue	86%	94%
Navy Blue	90%	94%
Turquoise	83%	92%
Rainforest	89%	96%
Desert Sand	80%	92%
Black	95%	96%
Sunflower Yellow	70%	94%
Terracotta	84%	90%
Arizona	84%	92%
White	57%	86%
Silver	88%	93%
Red	80%	86%
Electric Purple	83%	91%
Zesty Lime	84%	92%
Cinnamon	92%	94%
Olive	89%	95%
Chocolate	92%	93%

4. Storage Bins for Sails During Winter Season
   a. Contractor shall provide enough storage bins for all sails for storage during winter season.

3. CONSTRUCTION

3.1 INSTALLATION

A. The installation of fabric shade structures shall be performed by manufacturer or manufacturer-approved contractor. All installation personnel must have experience in the erection of tensioned fabric structures.

B. The installation shall comply with the manufacturer's instructions for assembly, installation, and erection, per approved drawings.

C. Concrete:

1. Unless noted otherwise for footings and piers by the Project Engineer, the concrete specification for footings, piers, slabs, curbs, and walkways shall meet a minimum 3,000psi at 28-day strength.

2. Concrete work shall be executed in accordance with the latest edition of American Concrete Building Code ACI 318-14.

3. Concrete specifications shall comply in accordance with the Section 03300 Cast-in-Place Concrete, detailed as per plans, and shall be as follows:

a. 28 Days Strength F'c = 3000 psi
b. Aggregate: HR
c. Slump: 3 ~ 5 inch
d. Portland Cement shall conform to C-150
e. Aggregate shall conform to ASTM C-33

4. All reinforcement shall conform to ASTM A-615 grade 60.

5. Reinforcing steel shall be detailed, fabricated, and placed in accordance with the latest ACI Detailing Manual and Manual of Standard Practice.

6. Whenever daily ambient temperatures are below 80 degrees Fahrenheit, the contractor may have mix accelerators and hot water added at the batch plant (See Table 1).

7. The contractor shall not pour any concrete when the daily ambient temperature is to be below 55 degrees Fahrenheit.

TABLE 1

Temperature Range	% Accelerator	Type Accelerator
75~80 degrees F	1%	High Early (non calcium)
70~75 degrees F	2%	High Early (non calcium)
Below 70 degrees F	3%	High Early (non calcium)

D. Foundations:

1. All anchor bolts set in new concrete shall comply with ASTM F1554 GR 55.

2. All anchor bolts shall be Hot-Dip Galvanized.

3. Footings and full rebar cages shall be drilled, set, and poured as per manufacturer's specifications.

4. METHOD OF MEASUREMENT

The total quantity to be paid under this Item shall be a lump sum amount for the supply and installation of the SHADE STRUCTURES in accordance with the Plans, Specifications and/or the direction of the Engineer.

5. BASIS OF PAYMENT

The unit bid price shall include, but not be limited to all necessary labor, insurance, shipping, material, and incidentals necessary to complete the work, including, but not limited to, fabrication and installation of SHADE STRUCTURES, concrete foundations, all excavation and backfilling, and stamped shop drawings,

storage bins for sails during winter season, all in accordance with the plans, the specifications and the directions of the Engineer.

Payment shall be made under the appropriate Items:

Item No.	Description	Unit
Item 524-S-A	Shade Structures – Playground Area	LS
Item 524-S-B	Shade Structures – Seating Area	LS

END OF SECTION

ITEM 525-S - STEEL PLAY EQUIPMENT

1. DESCRIPTION

Under this item, the Contractor shall furnish and install all STEEL PLAY EQUIPMENT in accordance with the plans, specifications and directions of the Engineer. In addition, the Contractor shall furnish extra materials to Nassau County Parks Department, as specified under the heading EXTRA MATERIALS.

NOTE:

Final installation of the steel play equipment (concrete footings) shall not proceed until the Contractor has demonstrated to the satisfaction of the Engineer that the use zones comply with ASTM 1487-Latest Rev., and CPSC guidelines. The safety surfacing shall be installed as soon as possible after the play equipment installation is complete. The Contractor shall be responsible for temporarily barricading the Play Equipment prior to completion of the safety surfacing installation.

GENERAL:

Play Equipment shall be as shown on the drawings. All play equipment shall be BURKE, as manufactured by American Recreational Products, 144-1 Remington Blvd., Ronkonkoma, NY 11779;
Phone: (631) 244-0011; Email: erica@americanrecreational.com; See Attachment A.

Or approve equal.

STANDARDS: All play equipment design and construction shall meet or exceed the requirements as published in the Handbook for Public Playground Safety issued by the U.S. Consumer Product Safety Commission, the Consumer Product Safety Improvement Act (CPSIA) of 2008, and ASTM Designation F1487-Latest Rev., "Standard Consumer Safety Performance Specification for Playground Equipment for Public Use." Play equipment design and construction shall also comply with "Guide to ADA Accessibility Guidelines for Play Areas", Final Ruling (ADA). Each Playground Equipment Manufacturer must be a member of the International Play Equipment Manufacturers Association (IPEMA) a third party certification inspection organization which continually validates a manufacturer's compliance with ASTM F1487-Latest Rev.; or demonstrate that the standards and experience required for membership are possessed.

2. MATERIALS:

FOOTINGS: Concrete for footings shall be 3,200 psi Average Concrete.

STEEL MEMBERS:

Posts: Posts and vertical members shall be Schedule 40 pipe or Structural Steel tubing as specified below. Tubing for posts shall have a minimum thickness of 0.120" (11 gauge).

Railings and Fixtures: Railings and fixtures shall be schedule 40 pipe or structural tubing of such thickness that the railings shall not sag or bend during use. Any tubing that bends, sags or does not meet ASTM F1487-Latest Rev., Section 12.5 shall be replaced and upgraded by the manufacturer at no additional cost to the City.

Tubular Steel: Tubular steel shall be structural tubing of the sizes and shapes shown in the approved shop drawings. Steel shall meet the specifications for ASTM A500, Grade B which has a minimum tensile strength of 58,000 psi (for round and shaped) and a minimum yield point of 42,000 psi for round structural tubing and a minimum yield point of 46,000 psi for shaped structural tubing. Material shall be load-tested under ASTM 1487-Latest Rev., after fabrication.

Pipe: Pipe for climbers, ladders, shall be Schedule 40 or structural tubing steel pipe conforming to the requirements of ASTM A53 and shall be of the same sizes, indicated on the plans. Steel pipe shall be load tested under ASTM F1487-Latest Rev., requirements after fabrication. The outside diameter of all hand gripping components including rungs on horizontal ladders, climbing bars, handrails, etc. shall comply with the anthropometric dimensions as listed in the ASTM 1487-Latest Rev. standards.

Pipe Caps: All exposed ends of steel members shall be plugged with metal caps riveted in place with self-sealing rivets or spot welded.

FITTINGS AND CLAMPS: All fittings and clamps shall be as indicated on the approved shop drawings and as may be required to complete the installation. All fittings shall be of the best quality malleable iron, drop-forged steel or steel plate as indicated. Clamp fittings shall be cast aluminum or 12 gauge drawn quality or better steel and finished to match vertical components and shall be smoothly constructed with no projections or sharp edges. All clamps shall have tamper resistant fasteners. Clamps used on component subjected to vertical loads shall be pinned to prevent slipping and twisting.

FASTENERS: All fasteners including, but not limited to, bolts, lag screws, tie rods, threaded rods, nuts, and washers, shall be of the sizes indicated on the approved shop drawings. Fasteners shall be either stainless steel per ASTM F879 or carbon steel treated with a corrosion resistant coating per applicable ASTM plating specifications. All threaded fasteners shall include a locking patch-type material that will meet the minimum torque requirements of Industrial Fastener's Institute (IFI)-125 "Test Procedure for the Locking Ability Performance of Chemical Coated Lock Screws". The play equipment Manufacturer shall provide special tools for pinned tamperproof fasteners. All protruding bolts, screws and other threaded connectors shall be cut off to within two threads of nut, washer, etc., then satisfactorily peened to prevent removal by unscrewing, and filed completely smooth to remove all sharp edges.

CHAIN: Chain for climber shall be stainless steel, minimum size 7/32", 4/0 welded link chain.

PLASTIC LUMBER: Plastic lumber shall be made from UV stabilized recycled high density polyethylene. Recycled lumber shall be protected during transportation. Unless otherwise specified, color shall be "Natural". Recycled plastic lumber may not be used on spans greater than two (2') feet unless additional structural support is provided. An engineering analysis of structural integrity based on ASTM F1487 shall be submitted upon request. Plastic Lumber shall be smooth on all sides and ends. Plastic Lumber shall be free from all but minor marks, blemishes, discolorations, warp, wane, twist, quirk or other imperfections. The intersection of all planes of faces, edges and ends shall be eased to one-eighth (1/8") inch radius.

ROTATIONALLY MOLDED POLYETHYLENE: Parts shall be rotationally molded from color-compounded, first quality, linear low-density polyethylene with a tensile strength of 2,500 psi per ASTM D638 and with color and UV-stabilizing additives. Dry-blended or molded-in resins are not acceptable. Polyethylene shall be ultraviolet stabilized to UV-8 and have anti-static additives. Wall thickness shall vary by component and as shown on the approved shop drawings.

SHEET PLASTIC PARTS: Sheet plastic parts shall be manufactured from three-quarter (3/4") inch high-density polyethylene that has been specially formulated for optimum UV stability and color retention. Products shall have a minimum density of 0.933 G/cc in accordance with ASTM D1505 and a minimum tensile strength of 2,400 psi in accordance with ASTM D638. All edges shall be free of burrs, sharp edges, and points.

STEEL FABRICATION: All steel components to be welded shall be welded in complete accordance with the standards of the American Welding Society. All welds shall be continuous around the entire perimeter. All welds shall be ground smooth. NO TACK WELDING AND NO FIELD WELDING SHALL BE PERMITTED.

CORROSION RESISTANT TREATMENT: All fabrication and welding shall be completed prior to application of the corrosion resistant coating, metal pieces shall be cleaned of all weld spatter, mill scale, varnish, rust, grease, and the like and the surface mechanically and chemically prepared to receive the coating. This corrosion resistant coating shall a thermal spray zinc coating or electrostatic applied primer with a minimum thickness of 3 mils. All metal pieces, including welds, shall receive the coating.

POLYESTER POWDER COATING: A surface coat shall be applied to the thermal zinc coated metal pieces in such a manner that the coating will not peel off. The manufacturer shall perform all processes required to achieve a smooth material bond. An epoxy or acrylic polymer primer shall be applied prior to application of powdercoating. The surface coat shall be an electrostatically sprayed, lead-free, superdurable TGIC (triglycidyl isocynanurate) polyester powder coating applied to a minimum of five(5) mil thickness which shall be oven cured. The TGIC polyester powder coating shall comply with the ASTM standards below:

PHYSICAL PROPERTIES	TEST METHODS	ACCEPTANCE CRITERIA
Adhesion cross hatching	D3359B	5B (0% area removed)
Flexibility conical mandrel	D522	Pass 3/8” mandrel
Pencil hardness	D3363	Pencil hardness 2H minimum
Impact resistance	D2794	80 inch pounds minimum
Overbake resistance- Adhesion	D2454	5B
Overbake resistance- Hardness	D2454	Pencil hardness 2H minimum
Overbake resistance- Direct Impact	D2454	80 inch pounds minimum
Humidity resistance-250 hours	D4585	No visible change to surface
Weatherability	D822	No visible change to surface
Salt Spray Resistance	B117	1000 Hours
Corrosion Resistance	D1654	Rating 6 or greater
UV Exposure	G154, 340 bulb	2,000 hours, rating delta E of 2 90 percent gloss retention

Colors shall be as shown on the drawings. (Submittals required, see Submittals). Material manufacturer’s directions for storage and use shall be adhered to. Material surfaces shall be protected during shipment so as to arrive mar and scratch free in the field.

SPECIFIED COMPONENTS AND ATTACHMENTS: All components and attachments used for the steel play equipment shall be validated by the IPEMA Third Party Process, or an approved equal

third party validation process, to demonstrate compliance with ASTM F1487.

STEEL DECKS/STEPS: Steel decks and steps shall consist of a single piece of low carbon, 12 gauge (0.105”), minimum thick sheet steel conforming to ASTM A1011. The steel sheet shall be perforated with a return flange formed on the perimeter to provide necessary reinforcement to ensure structural integrity. Steel decks and steps shall be reinforced and cross-braced as necessary to prevent any noticeable deflection. Perforation shall be small enough to eliminate potential finger entrapment. Decks shall be flush with the outside edge of the supporting posts. There shall be no unsupported area larger than four (4 sf) square feet.

Decks and steps shall be coated with a hot dipped polyvinyl chloride (PVC) system or thermoplastic polyethylene coating with a gritty non-slip surface. Deck/Step surface must be slip resistant in both wet and dry conditions. The PVC coating shall have a hardness of Shore A 83 +/-5 normal durometer range. The material shall be classed as "Self Extinguishing", meets or exceeds DOT MVSS 302 or UL 94HB, and contains ultraviolet inhibitors to help prolong the life of the coating. The PVC coating shall meet all applicable phthalate levels as specified under CPSIA.

PLASTIC LUMBER DECKS. Plastic lumber decking shall be sized as shown on the drawings and shall be affixed to supporting members in a tamper resistant method with spacers as necessary to prevent potential pinching.

SAFETY RAILINGS: Safety rails shall provide enclosure and shall have no gaps greater than 3.5" and less than 9". Tubing and pipe used for safety rails shall not exceed 1.54" in outer diameter and shall have corrosive protection and powder coating as specified above. All welds shall be complete and ground smooth. These requirements shall conform to ASTM F1487-Latest Rev. standards.

TIRE SWING: Tire swing shall consist of an overhead beam, reinforcing insert, connector plates, automotive type universal joint assembly with protective rubber bellows or an universal joint assembly with bearings, swing chain, ‘tire’ type swing seat and all required hardware for assembly. ‘Tire’ type swing seat shall be designed and manufactured especially for playground use. Standard fiberglass and/or steel belted automobile tires are not acceptable. The ‘tire’ type swing seat shall have a twenty eight (28") inch minimum outer diameter and a fourteen (14") inch minimum inner diameter and shall be fitted with a reinforcing ring. Chain attachment area shall minimize the likelihood of fingers becoming caught. Drainage holes shall be provided in the underside of the tire.

SLIDES: Spiral and straight slides shall be constructed of either stainless steel or rotationally molded polyethylene as shown on the approved shop drawing. Rotationally molded polyethylene shall meet the specifications above. Stainless steel slides shall be constructed of 16 gauge or better stainless steel with a 2B finish. The underside of the stainless steel slide shall be constructed such that there are no projections or sharp or rough edges. Slide bed and enclosure shall conform to CPSC guidelines for spiral slides. The slide bed and sides shall be shaped and dimensioned such that the rider will not tip or slide over outside edge of the slide. Gaps between the slide and main support post are not acceptable. Gaps shall be closed through either mechanical fasteners, welding, or methods approved by the Engineer. Spiral slide chutes shall either installed by manufacturers factory trained certified installers, or completely assembled at the factory and shipped to site ready for field erection.

FLEX BRIDGES: Flex Bridges shall be constructed with metal straps or steel reinforcedrope/cable. Flex

Bridges constructed with chains are not acceptable components under this specification.

CLIMBING CABLE (ROPE): Cable shall comprise of six-stranded and tempered steel reinforced rope. The galvanized steel wire cores of the six strands shall be inductively fused to the polyamide or polyester outer coating. The coating shall be abrasion-resistant and colorfast to ultraviolet degradation. The breaking strength of the cable shall exceed the applicable load applied to the net climber. The climbing cable net shall be completely factory assembled in a configuration that is ready for attachment to the frame on site.

AGE APPROPRIATE SIGNAGE: In accordance with CPSC Handbook for Public Playground Safety, Sections 2.2.5 and 2.2.6 and ASTM F1487, play equipment units shall have age appropriate signage in a clearly conspicuous place near or on the equipment platform at the entry point. This signage shall state one of the following: 1) "This play equipment is designed for Preschool Children Ages 2 to 5 years. Adult supervision is recommended"; or 2) "This play equipment is designed for School Age Children ages 5 to 12 years. Adult supervision is recommended". Unless otherwise shown on the Drawings, the sign shall be routed two color sheet plastic, or approved equal.

Manufacturer Identification Sticker: The play equipment shall have an identification sticker placed in an inconspicuous place on the equipment for M & O reference. (For example, under a slide bed at the lowest point). The sticker shall identify the manufacturer's address and a toll free phone number.

3. INSTALLATION:

The work under this item shall be performed by a Contractor with experience erecting steel play equipment in accordance with ASTM F1487-Latest Rev. and CPSC guidelines. If the general contractor lacks this experience, a subcontractor certified by the play equipment manufacturer shall be hired to perform this work. Final installation of the steel play equipment (concrete footings) shall not proceed until the Contractor has demonstrated to the satisfaction of Engineer that the use zones and the no-encroachment zones comply with ASTM 1487-Latest Rev. and CPSC guidelines.

Asphalt pavement shall be neatly saw-cut prior to excavation for footings. All tubular steel posts shall be set square and plumb in concrete footings as shown on the approved shop drawing to grade required assuring level installation of platform angle frames and rails. Footings shall have the top surface finished so as to provide sheet drainage away from steel uprights, level and free of surface fluctuations that could contribute to an uneven surface in overlying safety surfacing.

Equipment shall be assembled to configuration as shown on the approved shop drawings. All fastenings shall be made as shown on the drawings and shall be securely tightened with an impact and/or torque wrench (as per manufacturer's specification). The Contractor shall take precautions while trimming bolt projections, if necessary, to prevent metallic contamination (rust bloom) of the corrosion resistant bolts to the satisfaction of the Engineer. These precautions include the use of previously unused grinding wheels, and applying zinc rich paint on trimmed galvanized bolts. All work shall be done so that no hazardous projections or rust bloom shall be left in the finished work.

FIELD INSPECTION: An authorized manufacturer's representative shall inspect and approve the installation of the play equipment prior to final acceptance by Nassau County. The play equipment representative shall certify that the play equipment was correctly installed in accordance with the manufacturer's written instructions, all fastenings are securely installed meeting the manufacturers' maximum torque value, and meeting all

requirements set forth in ASTM F1487- Latest Rev. A Document of Acceptance shall be provided by the manufacturer's representative stating that a field inspection was conducted and the installation is accepted by the manufacturer's representative (See Submittals).

THIRD PARTY RESOLUTION: If a disagreement arises between Nassau County and the play equipment manufacturer regarding the safety of a particular play component, the Contractor shall be directed to hire an independent Certified Playground Safety Inspector (CPSI), as part of the bid price of this item, to assess if the play equipment component complies with the safety standards referenced above. The Contractor shall submit the qualifications of the CPSI for approval by the Landscape Architect prior to hiring. The independent CPSI shall inspect the play equipment on site and submit a final report detailing the determination of their inspection. If the play component is deemed to be unsafe by the independent CPSI, the Contractor shall make all necessary corrections at no additional cost to the City based on the CPSI's recommendation. If Nassau County wish to modify a play component after the independent CPSI deemed it to be meeting all safety standards, all materials and methods necessary to perform the requested modification shall be eligible for a change order extra.

EXTRA MATERIALS: The Contractor shall furnish and deliver, to Nassau County Parks Department, additional new materials obtained from the approved play equipment manufacturer. Contractor shall also furnish to the Engineer any catalogs, invoices, statements, etc. for verification that a complete set of all maintenance and operations manuals, tools, extra paint, materials, etc. have been furnished. All furnished material shall be properly identified with the name of park and contract number. Extra new materials shall include the following:

192 oz. - Graffiti Remover, for polyester powdercoated steel surfaces - One hundred ninety two (192) ounces in spray bottles: six (6) thirty two (32) ounce spray bottles; or twelve (12) sixteen (16) ounce spray bottles. Graffiti Remover shall be Go-Away graffiti remover, as manufactured by Nexgen, North Hollywood, CA.; Erase Graffiti Cleaner as manufactured by Landscape Structures, Delano, MN; or Gametime Graffiti Remover as manufactured by Gametime, Fort Payne, AL, or approved equal. Each container shall be clearly labeled, using a minimum of 1/4-inch high lettering: "For Play Equipment".

90 oz. - Touch-Up Paint, complete for all color surfaces, as provided by manufacturer. Twenty (20) cans of custom spray paint 4.5 oz. each can or a minimum of 90 ounces of paint (total all colors) shall be provided.

1 (One) - Tools And Hardware Maintenance Repair Kit, complete with tool box, special tools for tamper proof fasteners, fastener wrench and hardware (nuts, bolts screws etc.), to be provided by manufacturer. The repair kit shall be clearly marked with the Contract Number and the Playground name. Marking shall be done with permanent magic marker or other method approved by the Engineer.

40 (forty) Stainless Steel Chain shackles with hexdrive flush pins, forty (40) each, Suncor # S0115- NS10 as manufactured by Suncor Stainless, Inc. Plymouth MA or approved equal.

4 oz (each color) Vinyl Repair Kit in color(s) to match vinyl covered steel decks, complete in bottles or tubes. Vinyl repair material shall be "Plast-O-Meric" as manufactured by Gametime, Fort Payne, Alabama or approved equal. Front face of each container shall be clearly labeled using minimum of 1/4 inch high lettering: "For Vinyl-Coated Steel Decks".

SUBMITTALS: All submittals shall be submitted and approved prior to manufacture and in accordance with the requirements of the General Conditions, Section C, Special Provisions, Article 11.

Shop Drawings: The Contractor shall submit shop drawings no later than three (3) months prior to the scheduled

completion of the project. The shop drawings shall indicate as a minimum: the play equipment layout, the required minimum limits of the use zone, elevations, footings layout, and compliance with ADA requirements including access details and the ratio of elevated versus ground level events. The shop drawings shall show the distance in linear feet from outside edge of the safety surfacing to a minimum of three (3) closest adjacent fixed outside structures such as curbs, fences, benches or trees. The Contractor shall submit the following information if required by the Landscape Architect: materials, finishes, supports, hardware, fastener torque schedule, fittings and accessories.

Deviations From Layout: Any deviations from the contract drawings must be submitted for review and approval by the Landscape Architect.

Color Samples: Color samples shall be submitted for approval by the Landscape Architect before any powder coating is done.

Document of Acceptance: An authorized representative of the play equipment manufacturer must inspect and approve the completed installation. The play equipment will not be accepted by the play equipment manufacturer or the Parks Department until they are satisfied with the installation. No additional compensation will be given for any necessary corrective work. A Document of Acceptance signed by the authorized Manufacturers' representative must be submitted to the Engineer before the final 20% payment is made to the Contractor for this item.

Third Party Resolution: If arbitration is required, the Contractor shall submit qualifications for the independent CPSI for approval prior to hiring. The Contractor shall also submit a final report prepared by the independent CPSI detailing the result of the inspection.

Insurance Certificate: The Contractor shall furnish the Manufacturer' Certificate of Product Liability Insurance for one (1) million dollars.

Guarantee: The manufacturer shall guarantee replacement of any items or components found to be defective during the manufacturers' guarantee period. The Resident shall submit the original guarantee certificate to the Capital Liaison in the Maintenance Division at the completion of the project. The Contractor shall furnish the original and 4 (four) copies of the manufacturers' guarantee.

One (1) - Installation and Maintenance Manual, complete, as provided by manufacturer.

4. MEASUREMENT AND PAYMENT:

For furnishing and installing all STEEL PLAY EQUIPMENT in accordance with the plans, approved shop drawings, specifications and directions of the Engineer, the Contractor shall receive the LUMP SUM price bid.

The price bid shall be a LUMP SUM for all steel play equipment and shall include the cost of all labor, materials, equipment and incidentals necessary to complete the work, including excavation, concrete footings, the cost of hiring of an independent CPSI, if required, and all submittals, in accordance with the plans, approved shop drawings and specifications, to the satisfaction of the Engineer.

Upon submission and approval of the required shop drawings the Contractor shall receive three (3%) percent of the total bid price. Partial payment for stored materials may be granted as approved by the Engineer. Twenty (20%) percent of the total bid price for this Item shall be withheld until all specified certificates and

Document Of Acceptance have been submitted.

In addition, the Contractor shall deliver EXTRA MATERIALS as outlined above to Nassau County Parks Department. No additional payment shall be made for extra materials.

END OF SECTION

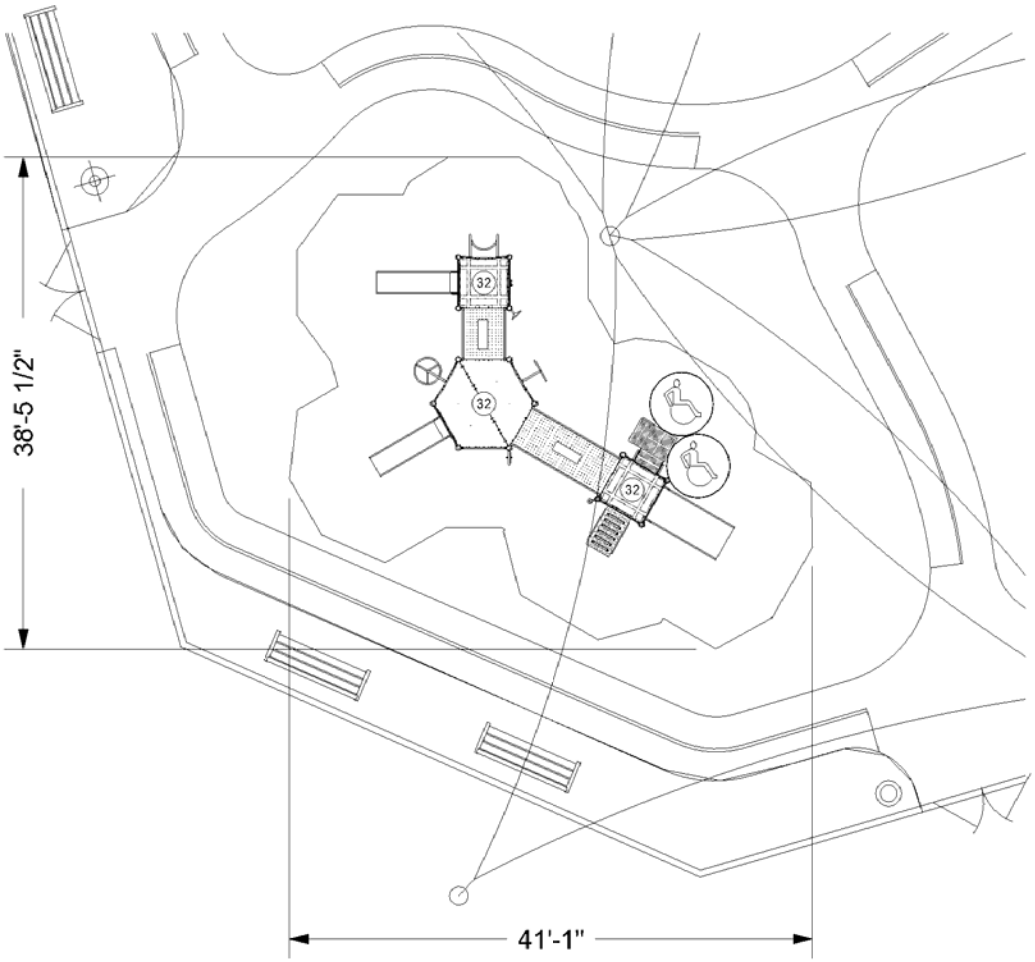

NOTE: ALTHOUGH ALL ATTEMPTS HAVE BEEN MADE TO PROVIDE AN ACCURATE SITE IT MAY NOT TRULY REPRESENT THE AREA WHERE THIS STRUCTURE IS TO BE PLACED.

AREA: 1,965 SQ. FT.

SCALE IN FEET
0 5 10

INFORMATION

MINIMUM FALL ZONE SURFACED WITH RESILIENT MATERIAL

AREA

988 SQ.FT.

PERIMETER

141 FT.

STRUCTURE SIZE

38' 5" x 41' 1"

STRUCTURE IS DESIGNED FOR CHILDREN AGES:

- [ ] 6-23 MONTH OLDS
- [x] 2-5 YEAR OLDS
- [ ] 5-12 YEAR OLDS
- [ ] 13 + YEAR OLDS

NSF Registered to ISO 9001

NSF Registered to ISO 14001

INTERNATIONAL PLAY EQUIPMENT MANUFACTURERS ASSOCIATION — PUBLIC PLAY EQUIPMENT — IPEMA CERTIFIED TO ASTM F1487

To verify product certification, visit www.ipema.org

The play components identified in this plan are IPEMA certified. The use and layout of these components conform to the requirements of ASTM F1487. To verify product certification, visit www.ipema.org

The space requirements shown here are to ASTM standards. Requirements for other standards may be different.

The use and layout of play components identified in this plan conform to the CPSC guidelines. U.S. CPSC recommends the separation of age groups in playground layouts.

ADA ACCESSIBILITY GUIDELINE (ADAAG CONFORMANCE)

NUMBER OF PLAY EVENTS:	11	
NUMBER OF ELEVATED PLAY EVENTS:	8	
NUMBER OF ELEVATED PLAY EVENTS ACCESSIBLE BY RAMP:	PROVIDED: 0	REQ'D: 0
NUMBER OF ELEVATED PLAY EVENTS ACCESSIBLE BY TRANSFER SYSTEM:	PROVIDED: 8	
NUMBER OF ELEVATED PLAY EVENTS ACCESSIBLE BY RAMP OR TRANSFER SYSTEM:		REQ'D: 4
NUMBER OF GROUND LEVEL PLAY EVENTS:	PROVIDED: 3	REQ'D: 3
NUMBER OF TYPES OF GROUND LEVEL PLAY EVENTS:	PROVIDED: 3	REQ'D: 3

WARNING!

ACCESSIBLE SAFETY SURFACING MATERIAL IS REQUIRED BENEATH AND AROUND THIS EQUIPMENT.

FOR SLIDE FALL ZONE SURFACING AREA SEE CPSC's Handbook for Public Playground Safety.

PLATFORM HEIGHTS ARE IN INCHES ABOVE RESILIENT MATERIAL.

Burke

SERIES: Nucleus

SITE PLAN

DRAWN BY: Pa Der Vang

Centennial Park Toddler Area

1 E. Centennial Avenue

Roosevelt, NY 11575

American Recreational Products

119-130075-1

June 01, 2020

H41876-01G

Nassau County DPW
BCI Burke Company, LLC PO Box 549 Fond du Lac, Wisconsin 54936-0549 Telephone 920-921-9220

ITEM	COMP	DESCRIPTION
1	270-0112	UNITARY ENCLOSURE
2	270-0130	SQUARE PLATFORM
3	270-0131	HEXAGONAL PLATFORM S5P
4	270-0184	LONG STRAIGHT BRIDGE W/BAR
5	270-0190	MINI ARCH BRIDGE W/BARRIERS
6	370-0149	SNAKE CLIMBER 32" - 48"
7	370-0164	LOOP RUNG LADDER 32" - 48"
8	370-0182	SATURN CLIMBER 32" - 40"
9	370-0306	DECK TO DECK PLANK GROUND
10	370-0718	TRANSFER STATION, HANDRAIL
11	370-0860	TREE BRANCH CLIMBER 32"
12	470-0605	SS DOUBLE WIDE SLIDE 32"-40"
13	470-0761	STEEL SLIDE 32"-40"
14	570-0716	CLICKER ACTIVITY PANEL
15	570-2626	NATURE PLAY PIPE WALL
16	670-0031	POST MOUNTED STEERING WHI
17	670-0156	POST MOUNTED BELL

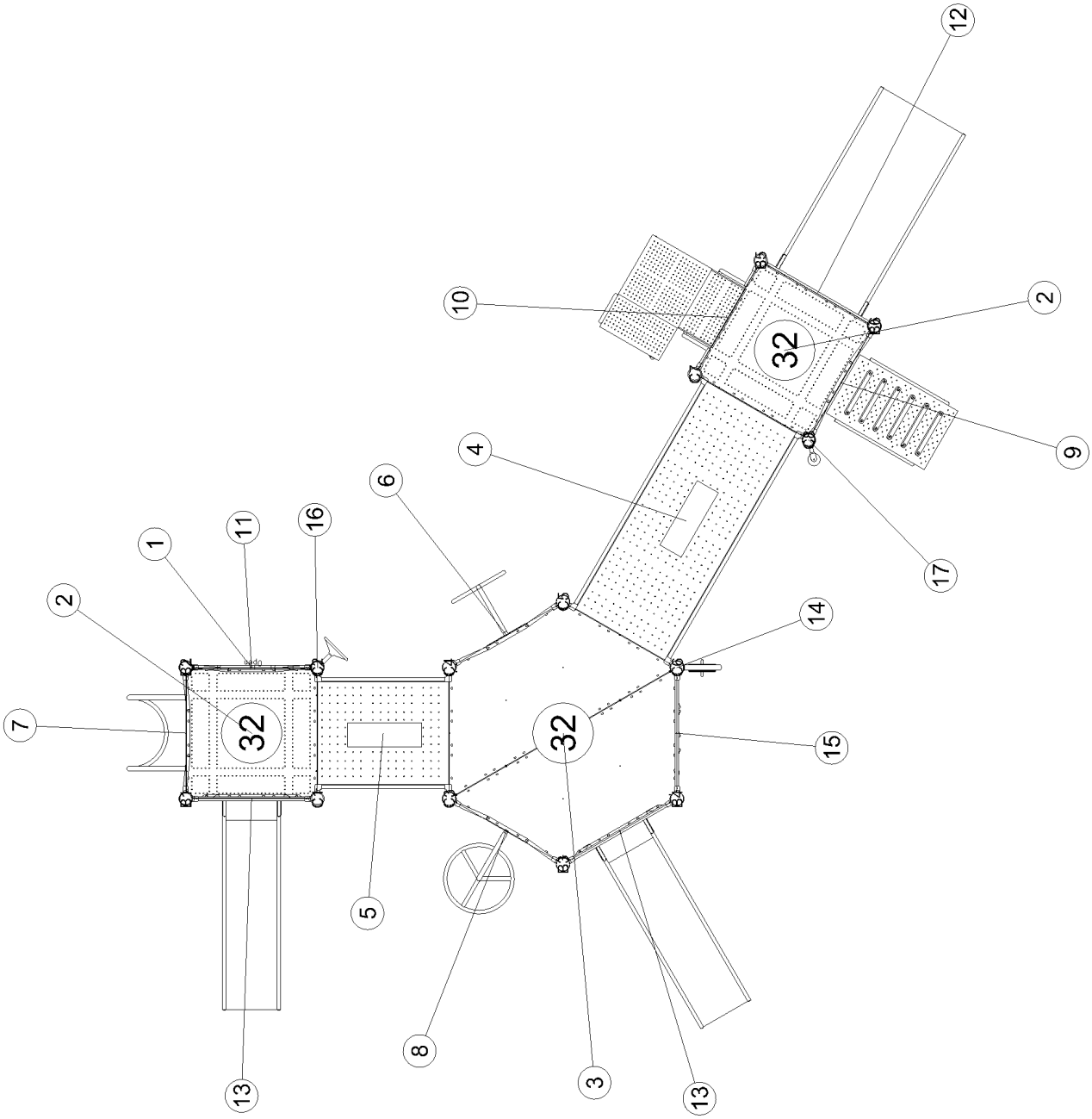

June 01, 2020

SERIES: Nucleus

COMPONENT PLAN

DRAWN BY: Pa Der Vang

Centennial Park Toddler Area

1 E. Centennial Avenue

Roosevelt, NY 11575

American Recreational Products

119-130075-1

H41876-01G

BCI Burke Company, LLC PO Box 549 Fond du Lac, Wisconsin 54936-0549 Telephone 920-921-9220

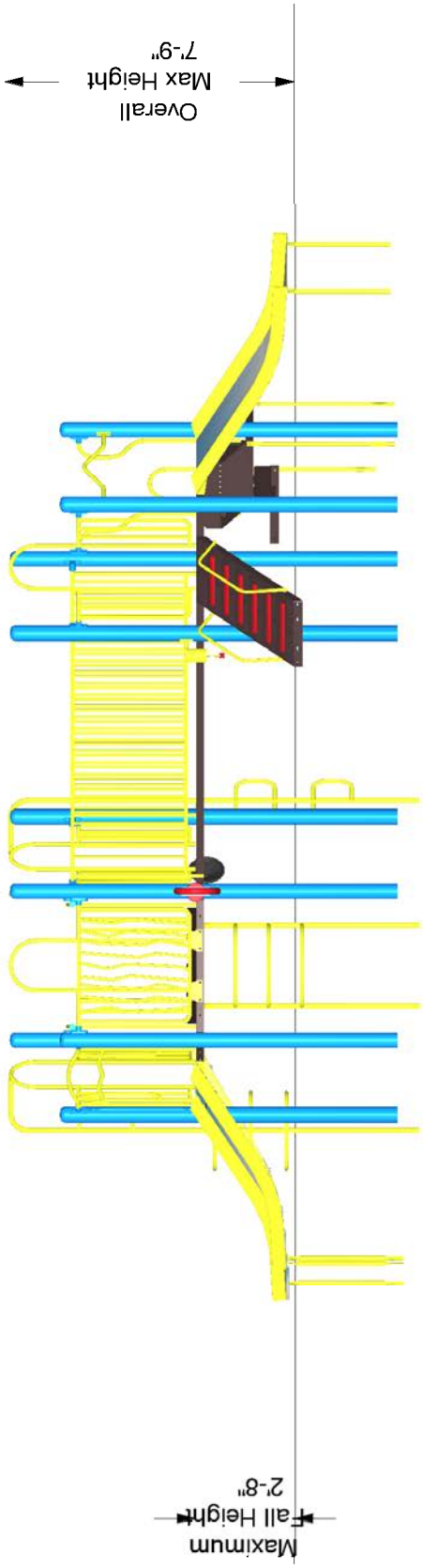

The protective surfacing for this design must accomodate the critical fall height.

Burke

June 01, 2020

SERIES: Nucleus

ELEVATION PLAN

DRAWN BY: Pa Der Vang

Centennial Park Toddler Area

1 E. Centennial Avenue

Roosevelt, NY 11575

American Recreational Products

119-130075-1

H41876-01G

BCI Burke Company, LLC PO Box 549 Fond du Lac, Wisconsin 54936-0549 Telephone 920-921-9220

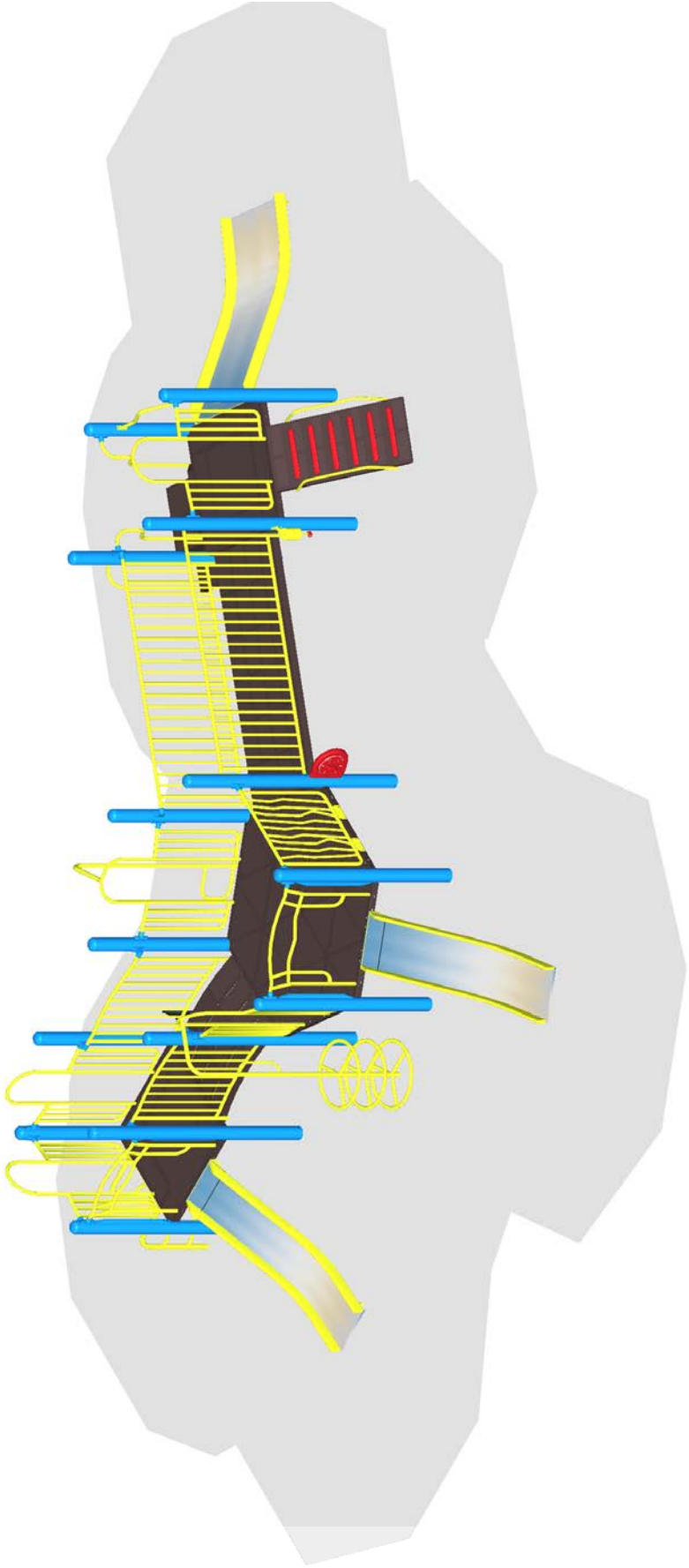

Burke

June 01, 2020

SERIES: Nucleus

ISOMETRIC PLAN

DRAWN BY: Pa Der Vang

Centennial Park Toddler Area

1 E. Centennial Avenue

Roosevelt, NY 11575

American Recreational Products

119-130075-1

H41876-01G

BCI Burke Company, LLC PO Box 549 Fond du Lac, Wisconsin 54936-0549 Telephone 920-921-9220

Project Location:
Centennial Park Toddler Area
1 E. Centennial Avenue
Roosevelt, NY 11575

American Recreational Products
144-1 Remington Blvd
Ronkonkoma, NY 11779 Phone:
631-244-0011
Fax: 631-750-2624
bob@americanrecreational.com;

Erica Peritore
Phone: 631-244-0011
Fax: 631-750-2624
erica@americanrecreational.com

Component No.	Description	Qty	User Cap	Ext. User Cap	Weight	Ext. Weight
Nucleus						
270-0112	UNITARY ENCLOSURE	1	0	0	34	34
270-0130	SQUARE PLATFORM	2	6	12	106	212
270-0131	HEXAGONAL PLATFORM S5P	1	12	12	287	287
270-0184	LONG STRAIGHT BRIDGE W/BARRIE...	1	10	10	365	365
270-0190	MINI ARCH BRIDGE W/BARRIERS	1	5	5	180	180
370-0149	SNAKE CLIMBER 32" - 48"	1	3	3	70	70
370-0164	LOOP RUNG LADDER 32" - 48"	1	1	1	99	99
370-0182	SATURN CLIMBER 32" - 40"	1	2	2	98	98
370-0306	DECK TO DECK PLANK GROUND LEV...	1	4	4	134	134
370-0718	TRANSFER STATION, HANDRAIL 32"	1	4	4	162	162
370-0860	TREE BRANCH CLIMBER 32"	1	2	2	17	17
470-0605	SS DOUBLE WIDE SLIDE 32"-40"	1	2	2	108	108
470-0761	STEEL SLIDE 32"-40"	2	2	4	105	210
570-0716	CLICKER ACTIVITY PANEL	1	2	2	10	10
570-2626	NATURE PLAY PIPE WALL	1	0	0	39	39
600-0104	NPPS SUPERVISION SAFETY KIT	1	0	0	3	3
660-0103	MAINTENANCE KIT, STRUCTURE	1	0	0	7	7
660-0104	INSTALLATION KIT, STRUCTURE	1	0	0	5	5
670-0002	POST ASSEMBLY 5" OD X 107"	6	0	0	58	348
670-0031	POST MOUNTED STEERING WHEEL A...	1	1	1	6	6
670-0156	POST MOUNTED BELL	1	1	1	5	5
670-0165	POST ASSEMBLY 5" OD X 123"	8	0	0	66	528

Total User Capacity: 65
Total Weight: 2,927 lbs.
Total Price: $31,319

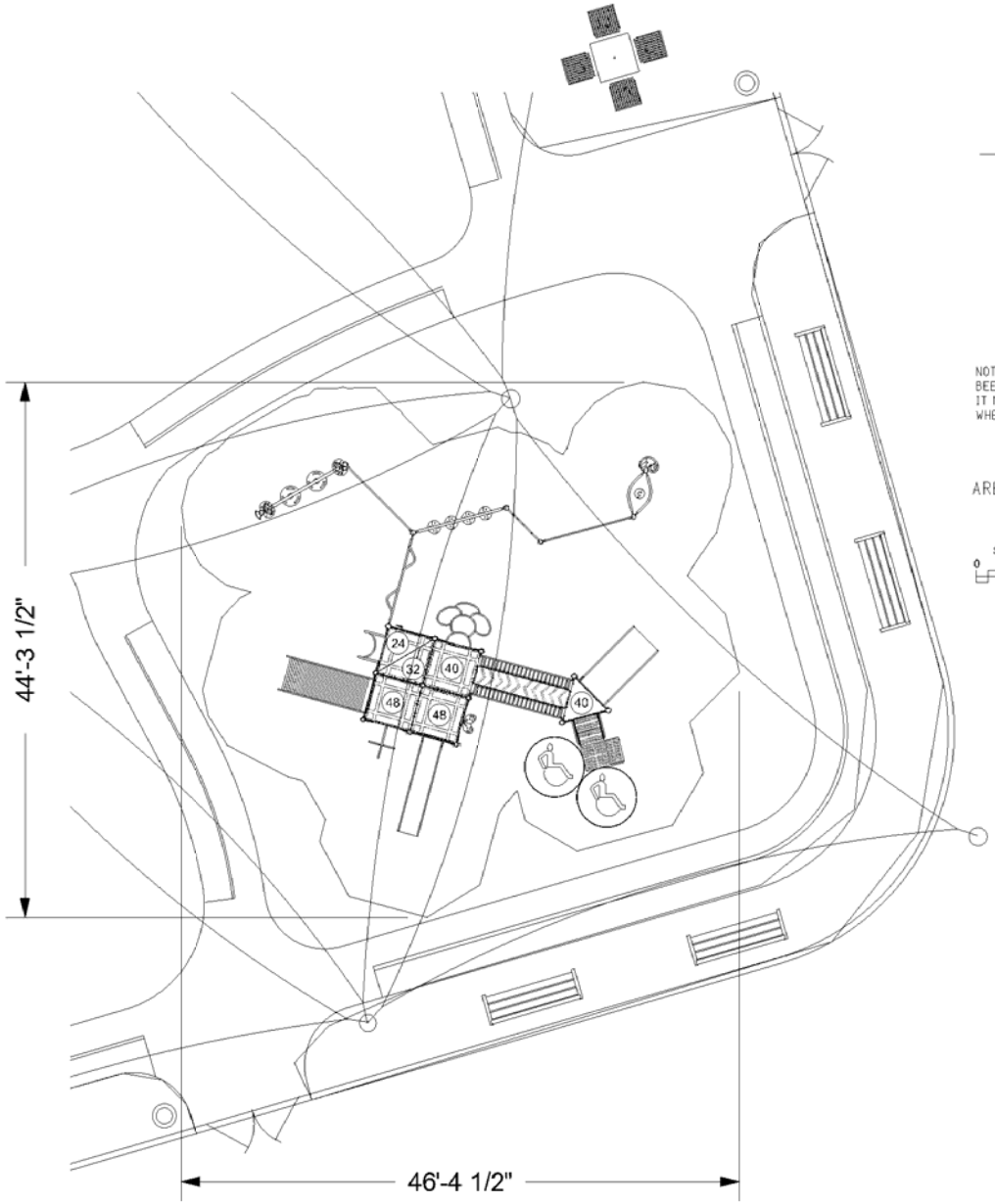

NOTE: ALTHOUGH ALL ATTEMPTS HAVE BEEN MADE TO PROVIDE AN ACCURATE SITE IT MAY NOT TRULY REPRESENT THE AREA WHERE THIS STRUCTURE IS TO BE PLACED.

AREA: 2,215 SQ. FT.

SCALE IN FEET
0 5 10

INFORMATION
MINIMUM FALL ZONE SURFACED WITH RESILIENT MATERIAL

AREA
1478 SQ.FT.

PERIMETER
173 FT.

STRUCTURE SIZE
44' 4" x 46' 4"

STRUCTURE IS DESIGNED FOR CHILDREN AGES:

- [ ] 6-23 MONTH OLDS
- [x] 2-5 YEAR OLDS
- [ ] 5-12 YEAR OLDS
- [ ] 13 + YEAR OLDS

NSF Registered to ISO 9001
NSF Registered to ISO 14001

INTERNATIONAL PLAY EQUIPMENT PUBLIC PLAY EQUIPMENT IPEMA CERTIFIED TO ASTM F1487 MANUFACTURERS ASSOCIATION
To verify product certification, visit www.ipema.org

The play components identified in this plan are IPEMA certified. The use and layout of these components conform to the requirements of ASTM F1487. To verify product certification, visit www.ipema.org

The space requirements shown here are to ASTM standards. Requirements for other standards may be different.

The use and layout of play components identified in this plan conform to the CPSC guidelines. U.S. CPSC recommends the separation of age groups in playground layouts.

ADA ACCESSIBILITY GUIDELINE (ADAAG CONFORMANCE)

NUMBER OF PLAY EVENTS:	15	
NUMBER OF ELEVATED PLAY EVENTS:	9	
NUMBER OF ELEVATED PLAY EVENTS ACCESSIBLE BY RAMP:	PROVIDED: 0	REQ'D: 0
NUMBER OF ELEVATED PLAY EVENTS ACCESSIBLE BY TRANSFER SYSTEM:	PROVIDED: 9	
NUMBER OF ELEVATED PLAY EVENTS ACCESSIBLE BY RAMP OR TRANSFER SYSTEM:		REQ'D: 5
NUMBER OF GROUND LEVEL PLAY EVENTS:	PROVIDED: 6	REQ'D: 3
NUMBER OF TYPES OF GROUND LEVEL PLAY EVENTS	PROVIDED: 3	REQ'D: 3

WARNING!

ACCESSIBLE SAFETY SURFACING MATERIAL IS REQUIRED BENEATH AND AROUND THIS EQUIPMENT.

FOR SLIDE FALL ZONE SURFACING AREA SEE CPSC's Handbook for Public Playground Safety.

PLATFORM HEIGHTS ARE IN INCHES ABOVE RESILIENT MATERIAL.

Burke

SERIES: Intensity, Nucleus
SITE PLAN
DRAWN BY: Pa Der Vang

Centennial Park 2-5 Area
1 E. Centennial Avenue
Roosevelt, NY 11575

American Recreational Products
119-130073-1

June 01, 2020

Nassau County DPW
BCI Burke Company, LLC PO Box 549 Fond du Lac, Wisconsin 54936-0549 Telephone 920-921-9220

H41876-01G

ITEM	COMP.	DESCRIPTION
1	270-0001	OFFSET ENCLOSURE
2	270-0050	8" CLOSURE PLATE
3	270-0129	TRIANGLE PLATFORM
4	270-0130	SQUARE PLATFORM
5	270-0136	SPLIT SQUARE PLATFORM
6	270-0185	PLATFORM LADDER 16"
7	270-0219	ARCHED CATWALK BRIDGE 96"
8	370-0001	AGILITY ARC
9	370-0002	PEP STEP
10	370-0029	DYNAMIC DISCS 2-5
11	370-0031	POWER PIPES CLIMBER 2-5
12	370-0034	ODYSSEY POST LINK SINGLE
13	370-0035	LATERAL POST LINK
14	370-0175	LOOP RUNG LADDER 24"
15	370-0212	RING MOUNTAIN 32"-40"
16	370-0422	LEAF CLIMBER 40" - 48"
17	370-0446	LINKING RING CLIMBER 32"-48"
18	370-0711	POWERFUL PODS
19	370-0719	TRANSFER STATION, HANDRAIL
20	370-0866	TREE BRANCH CLIMBER-2
21	370-1608	OVISTEP LAUNCH PAD
22	370-1623	CRUNCH BAR STATION
23	470-0605	SS DOUBLE WIDE SLIDE 32"-40"
24	470-0756	ROLLER SLIDE 48"-56"
25	470-0762	STEEL SLIDE 48"-56"

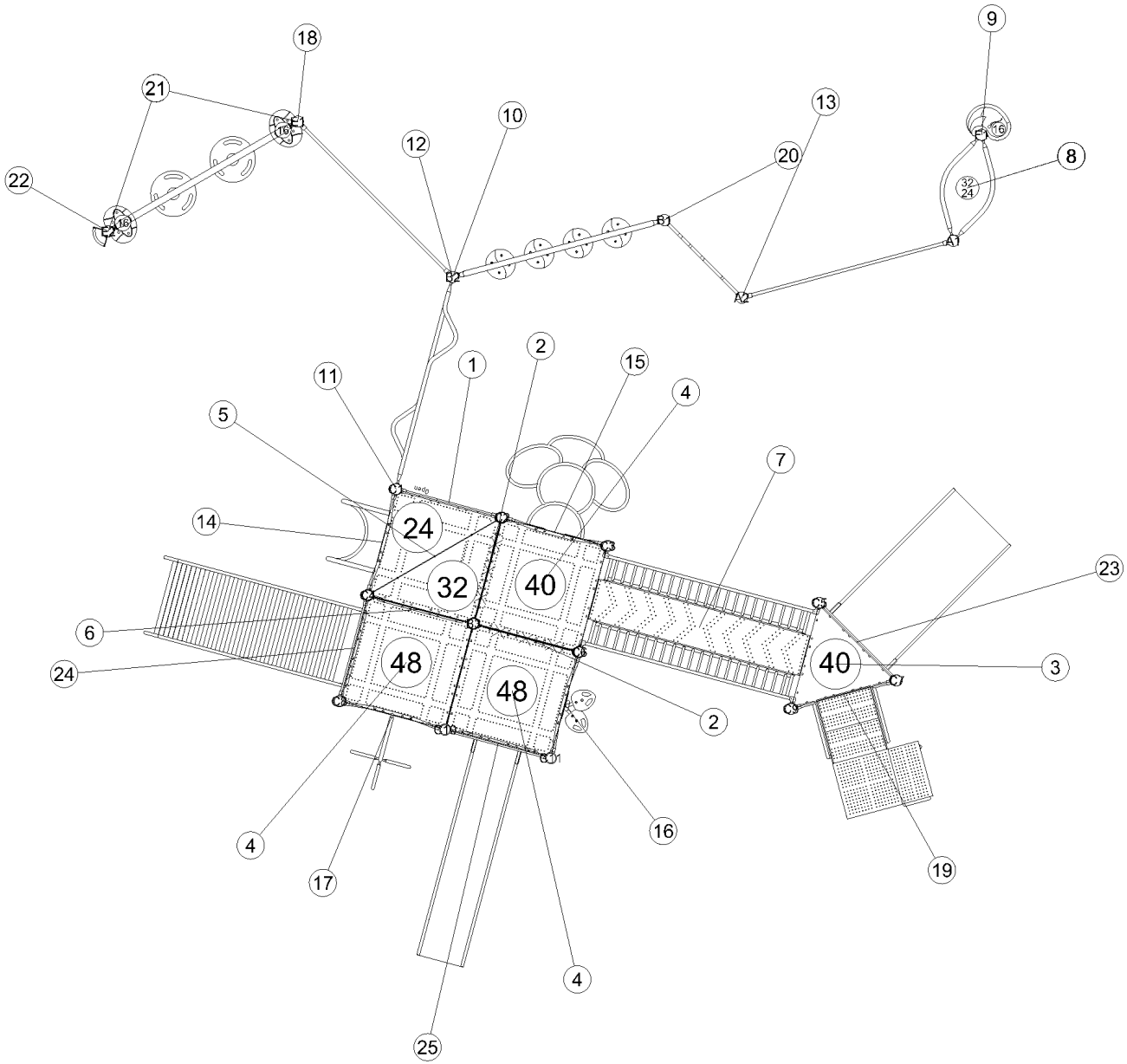

Burke

SERIES: Intensity, Nucleus
COMPONENT PLAN
DRAWN BY: Pa Der Vang

Centennial Park 2-5 Area
1 E. Centennial Avenue
Roosevelt, NY 11575

American Recreational Products
119-130073-1

June 01, 2020

H41876-01G

Nassau County DPW
BCI Burke Company, LLC PO Box 549 Fond du Lac, Wisconsin 54936-0549 Telephone 920-921-9220

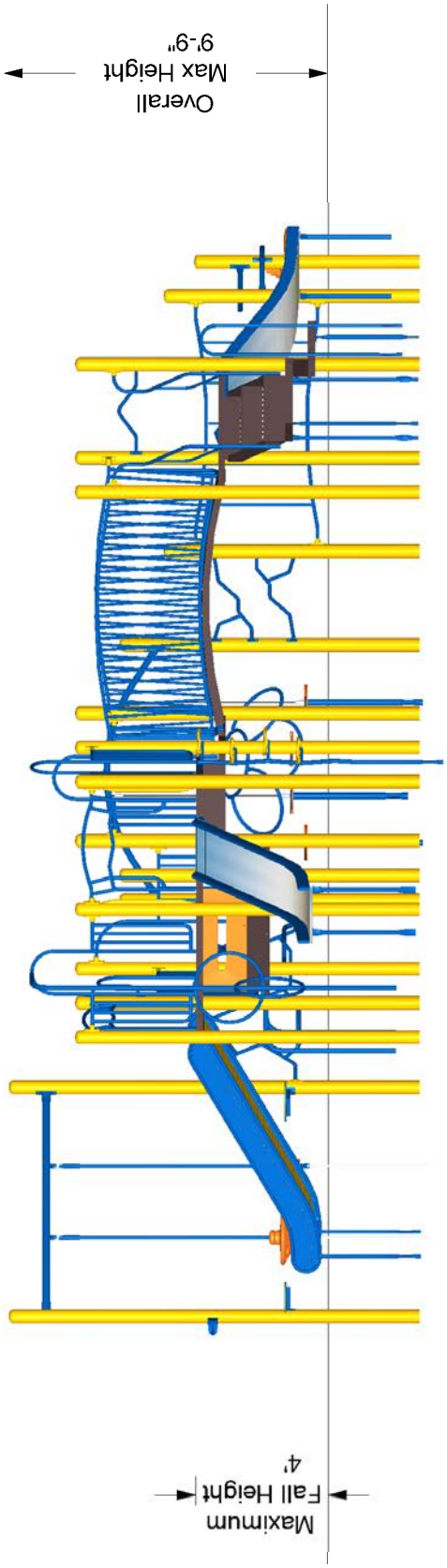

The protective surfacing for this design must accomodate the critical fall height.

Burke

June 01, 2020

SERIES: Intensity, Nucleus
ELEVATION PLAN
DRAWN BY: Pa Der Vang

Centennial Park 2-5 Area
1 E. Centennial Avenue
Roosevelt, NY 11575

American Recreational Products
119-130073-1

H41876-01G

BCI Burke Company, LLC PO Box 549 Fond du Lac, Wisconsin 54936-0549 Telephone 920-921-9220

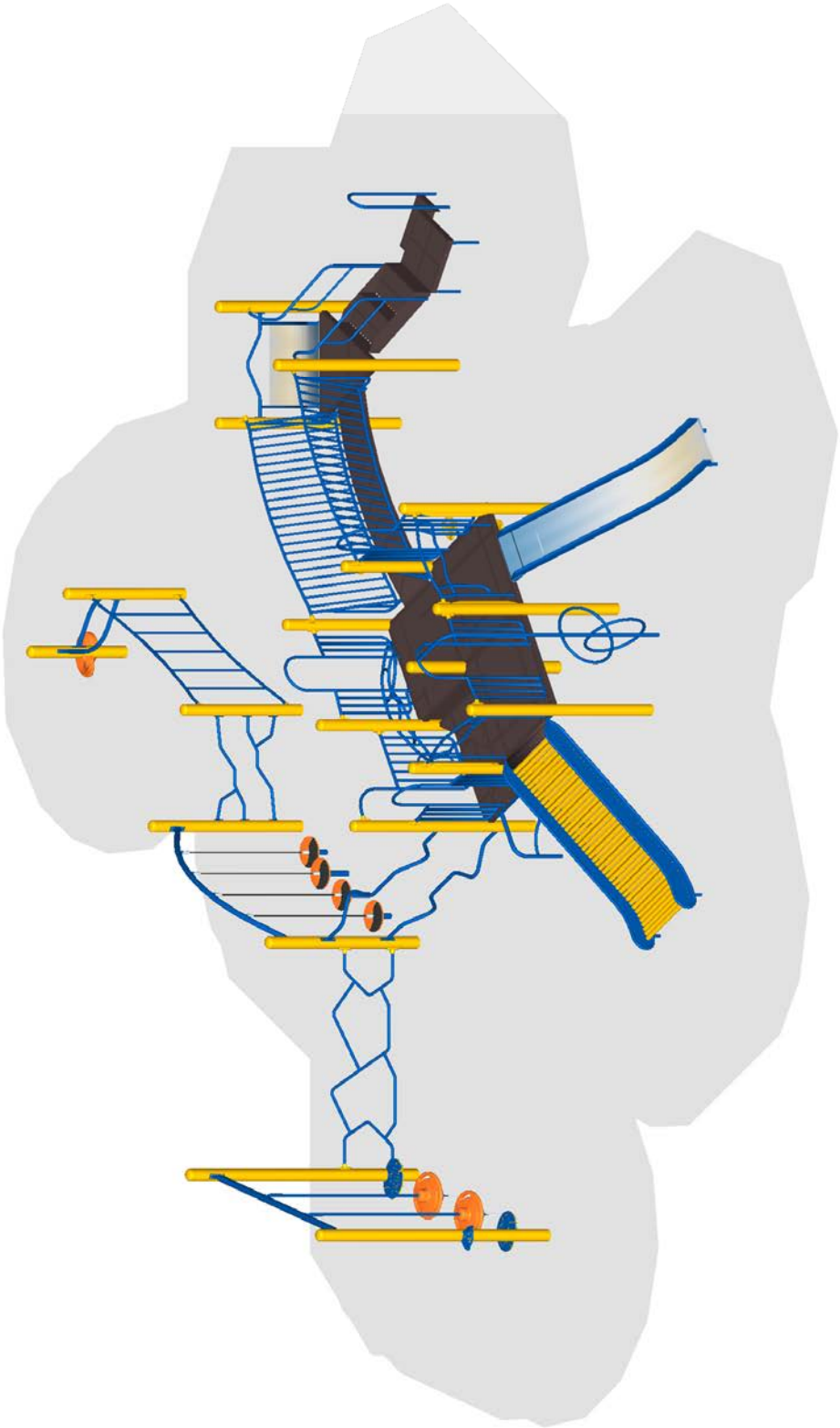

Burke

June 01, 2020

SERIES: Intensity, Nucleus

ISOMETRIC PLAN

DRAWN BY: Pa Der Vang

Centennial Park 2-5 Area

1 E. Centennial Avenue

Roosevelt, NY 11575

American Recreational Products

119-130073-1

H41876-01G

BCI Burke Company, LLC PO Box 549 Fond du Lac, Wisconsin 54936-0549 Telephone 920-921-9220

Project Location:
Centennial Park 2-5 Area
1 E. Centennial Avenue
Roosevelt, NY 11575

American Recreational Products
144-1 Remington Blvd
Ronkonkoma, NY 11779 Phone:
631-244-0011
Fax: 631-750-2624
bob@americanrecreational.com;

Erica Peritore
Phone: 631-244-0011
Fax: 631-750-2624
erica@americanrecreational.com

Component No.	Description	Qty	User Cap	Ext. User Cap	Weight	Ext. Weight
Intensity						
370-0001	AGILITY ARC	2	1	2	11	22
370-0002	PEP STEP	1	1	1	11	11
370-0029	DYNAMIC DISCS 2-5	1	6	6	121	121
370-0031	POWER PIPES CLIMBER 2-5	1	6	6	33	33
370-0034	ODYSSEY POST LINK SINGLE	1	2	2	39	39
370-0035	LATERAL POST LINK	1	4	4	33	33
370-0711	POWERFUL PODS	1	2	2	93	93
370-0866	TREE BRANCH CLIMBER-2	1	2	2	16	16
370-1608	OVISTEP LAUNCH PAD	2	1	2	10	20
Nucleus						
270-0001	OFFSET ENCLOSURE	1	0	0	30	30
270-0050	8" CLOSURE PLATE	2	0	0	10	20
270-0129	TRIANGLE PLATFORM	1	2	2	48	48
270-0130	SQUARE PLATFORM	3	6	18	106	318
270-0136	SPLIT SQUARE PLATFORM	1	4	4	103	103
270-0185	PLATFORM LADDER 16"	1	1	1	10	10
270-0219	ARCHED CATWALK BRIDGE 96"	1	6	6	368	368
370-0175	LOOP RUNG LADDER 24"	1	1	1	75	75
370-0212	RING MOUNTAIN 32"-40"	1	3	3	65	65
370-0422	LEAF CLIMBER 40" - 48"	1	4	4	77	77
370-0446	LINKING RING CLIMBER 32"-48"	1	2	2	80	80
370-0719	TRANSFER STATION, HANDRAIL 40"	1	5	5	199	199
370-1623	CRUNCH BAR STATION	1	1	1	4	4
470-0605	SS DOUBLE WIDE SLIDE 32"-40"	1	2	2	108	108
470-0756	ROLLER SLIDE 48"-56"	1	3	3	721	721
470-0762	STEEL SLIDE 48"-56"	1	2	2	125	125
600-0104	NPPS SUPERVISION SAFETY KIT	1	0	0	3	3
660-0103	MAINTENANCE KIT, STRUCTURE	1	0	0	7	7
660-0104	INSTALLATION KIT, STRUCTURE	1	0	0	5	5
670-0001	POST ASSEMBLY 5" OD X 91"	2	0	0	49	98
670-0002	POST ASSEMBLY 5" OD X 107"	3	0	0	58	174
670-0150	POST ASSEMBLY 5" OD X 80"	1	0	0	44	44
670-0165	POST ASSEMBLY 5" OD X 123"	11	0	0	66	726
670-0167	POST ASSEMBLY 5" OD X 147"	2	0	0	78	156

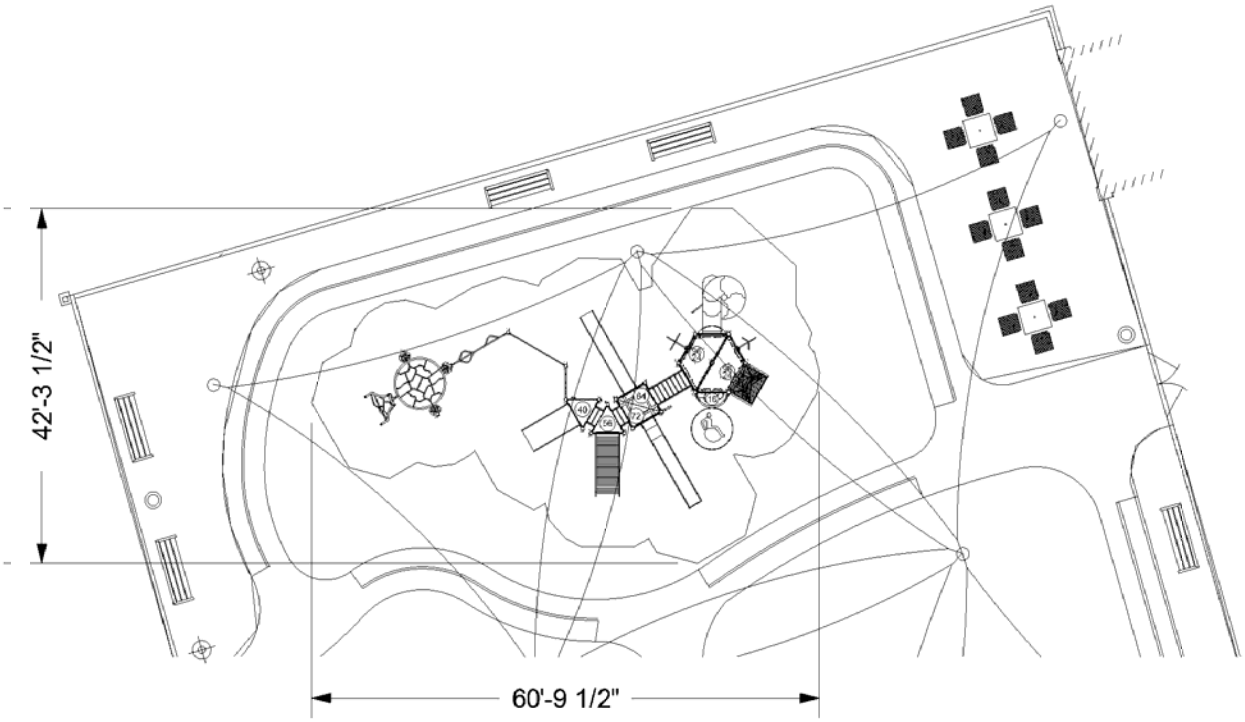

NOTE: ALTHOUGH ALL ATTEMPTS HAVE BEEN MADE TO PROVIDE AN ACCURATE SITE IT MAY NOT TRULY REPRESENT THE AREA WHERE THIS STRUCTURE IS TO BE PLACED.

AREA: 2,845 SQ. FT.

SCALE IN FEET 0 5 10

INFORMATION

MINIMUM FALL ZONE SURFACED WITH RESILIENT MATERIAL

AREA

1578 SQ.FT.

PERIMETER

185 FT.

STRUCTURE SIZE

42' 4" x 60' 9"

STRUCTURE IS DESIGNED FOR CHILDREN AGES:

- [ ] 6-23 MONTH OLDS
- [ ] 2-5 YEAR OLDS
- [x] 5-12 YEAR OLDS
- [ ] 13 + YEAR OLDS

NSF Registered to ISO 9001

NSF Registered to ISO 14001

INTERNATIONAL PLAY EQUIPMENT MANUFACTURERS ASSOCIATION — PUBLIC PLAY EQUIPMENT — IPEMA CERTIFIED TO ASTM F1487

To verify product certification, visit www.ipema.org

The play components identified in this plan are IPEMA certified. The use and layout of these components conform to the requirements of ASTM F1487. To verify product certification, visit www.ipema.org

The space requirements shown here are to ASTM standards. Requirements for other standards may be different.

The use and layout of play components identified in this plan conform to the CPSC guidelines. U.S. CPSC recommends the separation of age groups in playground layouts.

ADA ACCESSIBILITY GUIDELINE (ADAAG CONFORMANCE)

NUMBER OF PLAY EVENTS:	14	
NUMBER OF ELEVATED PLAY EVENTS:	9	
NUMBER OF ELEVATED PLAY EVENTS ACCESSIBLE BY RAMP:	PROVIDED: 0	REQ'D: 0
NUMBER OF ELEVATED PLAY EVENTS ACCESSIBLE BY TRANSFER SYSTEM:	PROVIDED: 6	
NUMBER OF ELEVATED PLAY EVENTS ACCESSIBLE BY RAMP OR TRANSFER SYSTEM:		REQ'D: 5
NUMBER OF GROUND LEVEL PLAY EVENTS:	PROVIDED: 5	REQ'D: 3
NUMBER OF TYPES OF GROUND LEVEL PLAY EVENTS:	PROVIDED: 3	REQ'D: 3

WARNING!

ACCESSIBLE SAFETY SURFACING MATERIAL IS REQUIRED BENEATH AND AROUND THIS EQUIPMENT.

FOR SLIDE FALL ZONE SURFACING AREA SEE CPSC's Handbook for Public Playground Safety.

PLATFORM HEIGHTS ARE IN INCHES ABOVE RESILIENT MATERIAL.

Burke

SERIES: Intensity, Nucleus

SITE PLAN

DRAWN BY: Pa Der Vang

Nassau County DPW

Centennial Park 5-12 Area

1 E. Centennial Avenue

Roosevelt, NY 11575

American Recreational Products

119-130083-1

June 01, 2020

H41876-01G

BCI Burke Company, LLC PO Box 549 Fond du Lac, Wisconsin 54936-0549 Telephone 920-921-9220

ITEM	COMP.	DESCRIPTION
1	270-0001	OFFSET ENCLOSURE
2	270-0050	8" CLOSURE PLATE
3	270-0112	UNITARY ENCLOSURE
4	270-0129	TRIANGLE PLATFORM
5	270-0132	HALF HEXAGON PLATFORM
6	270-0136	SPLIT SQUARE PLATFORM
7	370-0004	POWER PIPES CLIMBER
8	370-0033	ODYSSEY POST LINK DOUBLE
9	370-0466	16" TRANSITION STAIR W/BARRI
10	370-0469	40" TRANSITION STAIR W/BARRI
11	370-0556	ATOM CLIMBER 80"-96"
12	370-0557	LINKING RING CLIMBER 80"-96"
13	370-0829	PLEXUS OVERHEAD
14	370-0832	PLEXUS TANGLE CLIMBER
15	370-0834	OVERHEAD POST ATTACHMENT
16	370-0868	TREE BRANCH CLIMBER-4
17	370-1608	OVISTEP LAUNCH PAD
18	370-1649	EVOLUTION, DECK TO ROOF CLI
19	470-0075	HILLSIDE SLIDE ENTRANCE PLA
20	470-0605	SS DOUBLE WIDE SLIDE 32"-40"
21	470-0756	ROLLER SLIDE 48"-56"
22	470-0763	STEEL SLIDE 64"-72"
23	470-0767	STAINLESS STEEL WAVY SLIDE
24	470-0805	SLIDE HOOD, HIGH SIDE WALL
25	470-0808	EVOLUTION ROOF BOTTOM EDG
26	470-0813	EVOLUTION HEX ROOF
27	470-0831	VIPER SPIRAL 96 W/O HOOD
28	570-0717	RAINDROPS ACTIVITY PANEL
29	570-1557	EVOLUTION TALL CURVED TOP
30	570-1558	EVOLUTION TALL CURVED TOP
31	570-2626	NATURE PLAY PIPE WALL

Burke

June 01, 2020

SERIES: Intensity, Nucleus

COMPONENT PLAN

DRAWN BY: Pa Der Vang

Centennial Park 5-12 Area

1 E. Centennial Avenue

Roosevelt, NY 11575

American Recreational Products

119-130083-1

H41876-01G

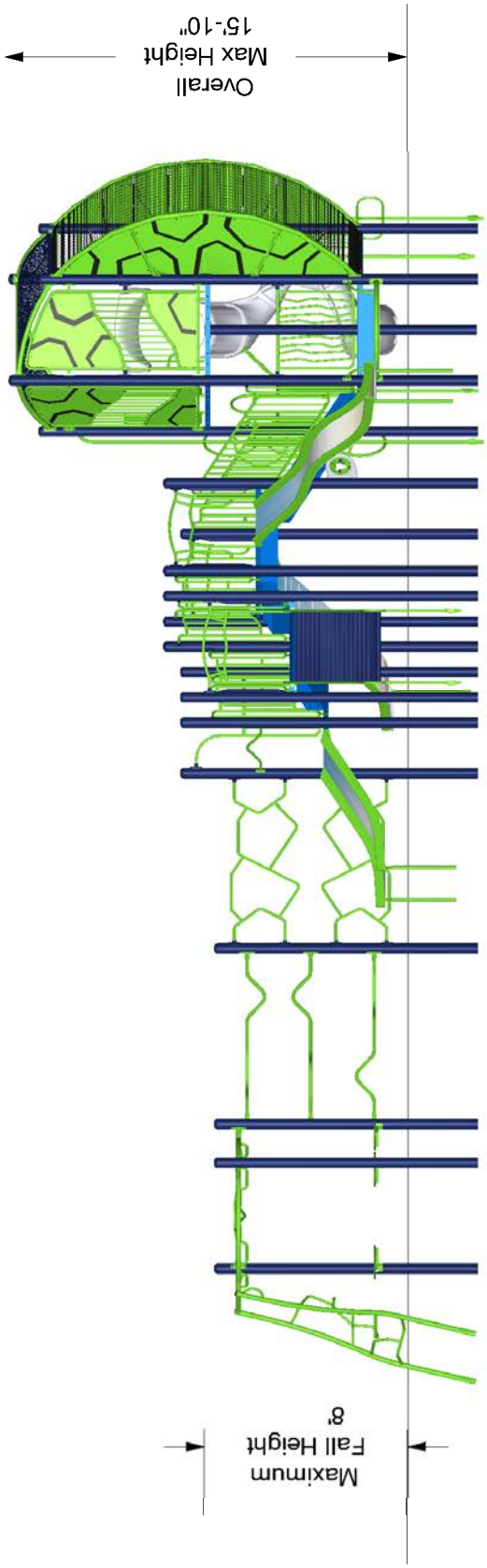

The protective surfacing for this design must accomodate the critical fall height.

Burke

June 01, 2020

SERIES: Intensity, Nucleus
ELEVATION PLAN
DRAWN BY: Pa Der Vang

Centennial Park 5-12 Area
1 E. Centennial Avenue
Roosevelt, NY 11575

American Recreational Products
119-130083-1

Nassau County DPW

H41876-01G

BCI Burke Company, LLC PO Box 549 Fond du Lac, Wisconsin 54936-0549 Telephone 920-921-9220

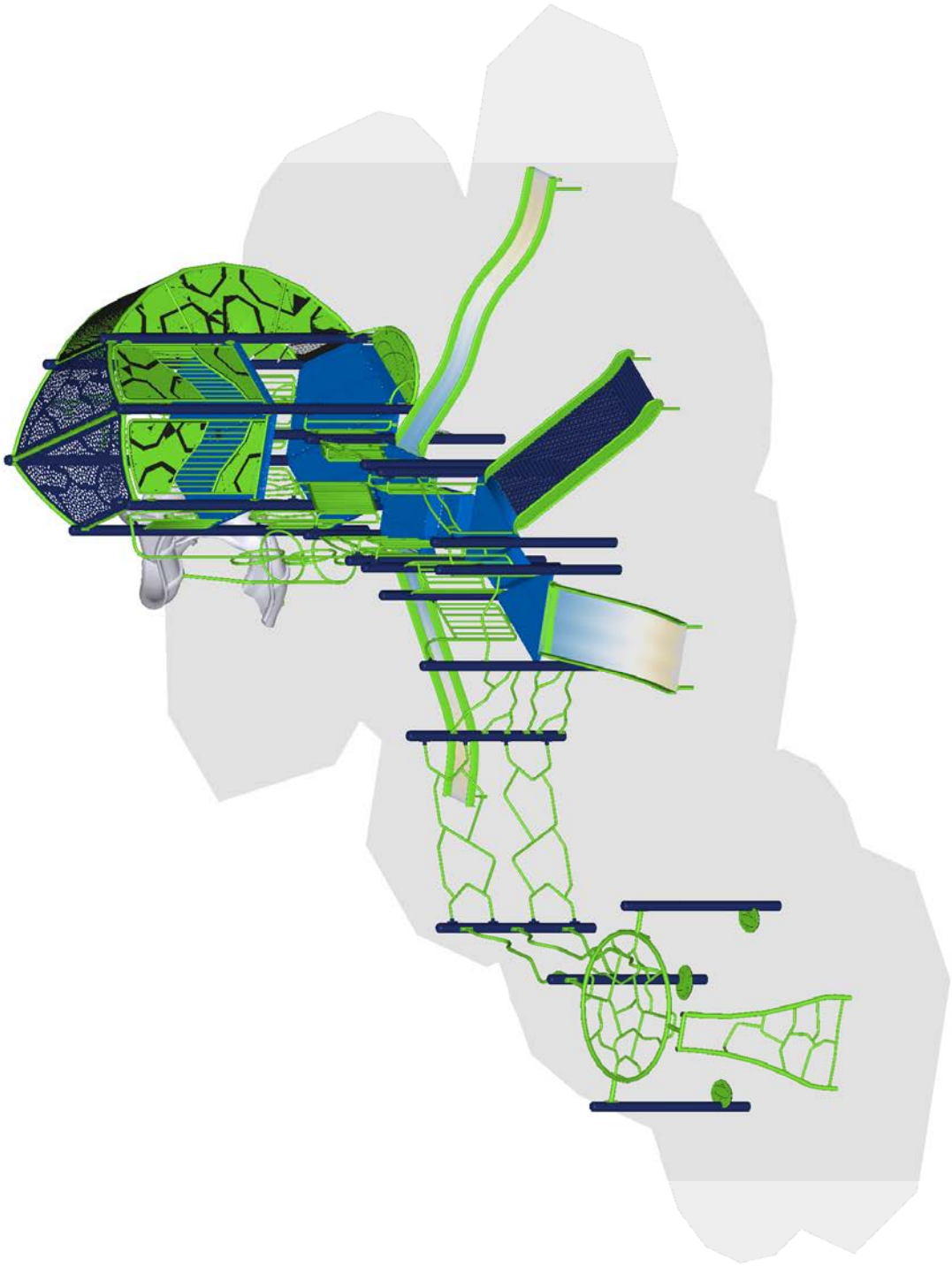

Burke

June 01, 2020

SERIES: Intensity, Nucleus

ISOMETRIC PLAN

DRAWN BY: Pa Der Vang

Centennial Park 5-12 Area

1 E. Centennial Avenue

Roosevelt, NY 11575

American Recreational Products

119-130083-1

H41876-01G

BCI Burke Company, LLC PO Box 549 Fond du Lac, Wisconsin 54936-0549 Telephone 920-921-9220

Project Location:
Centennial Park 5-12 Area
1 E. Centennial Avenue
Roosevelt, NY 11575

American Recreational Products
144-1 Remington Blvd
Ronkonkoma, NY 11779 Phone:
631-244-0011
Fax: 631-750-2624
bob@americanrecreational.com;

Erica Peritore
Phone: 631-244-0011
Fax: 631-750-2624
erica@americanrecreational.com

Component No.	Description	Qty	User Cap	Ext. User Cap	Weight	Ext. Weight
Intensity						
370-0004	POWER PIPES CLIMBER	1	6	6	47	47
370-0033	ODYSSEY POST LINK DOUBLE	1	4	4	78	78
370-0829	PLEXUS OVERHEAD	1	14	14	96	96
370-0832	PLEXUS TANGLE CLIMBER	1	2	2	89	89
370-0834	OVERHEAD POST ATTACHMENT	3	0	0	3	9
370-0868	TREE BRANCH CLIMBER-4	1	4	4	33	33
370-1608	OVISTEP LAUNCH PAD	3	1	3	10	30
Nucleus						
270-0001	OFFSET ENCLOSURE	1	0	0	30	30
270-0050	8" CLOSURE PLATE	1	0	0	10	10
270-0112	UNITARY ENCLOSURE	2	0	0	34	68
270-0129	TRIANGLE PLATFORM	2	2	4	48	96
270-0132	HALF HEXAGON PLATFORM	4	6	24	144	576
270-0136	SPLIT SQUARE PLATFORM	1	4	4	103	103
370-0466	16" TRANSITION STAIR W/BARRIE...	2	1	2	109	218
370-0469	40" TRANSITION STAIR W/BARRIE...	1	4	4	279	279
370-0556	ATOM CLIMBER 80"-96"	1	4	4	85	85
370-0557	LINKING RING CLIMBER 80"-96"	1	4	4	100	100
370-1649	EVOLUTION, DECK TO ROOF CLIMB...	1	7	7	472	472
470-0075	HILLSIDE SLIDE ENTRANCE PLATF...	1	1	1	52	52
470-0605	SS DOUBLE WIDE SLIDE 32"-40"	1	2	2	108	108
470-0756	ROLLER SLIDE 48"-56"	1	3	3	721	721
470-0763	STEEL SLIDE 64"-72"	1	2	2	154	154
470-0767	STAINLESS STEEL WAVY SLIDE 64...	1	2	2	160	160
470-0805	SLIDE HOOD, HIGH SIDE WALL	1	0	0	32	32
470-0808	EVOLUTION ROOF BOTTOM EDGE	1	0	0	13	13
470-0813	EVOLUTION HEX ROOF	1	0	0	211	211
470-0831	VIPER SPIRAL 96 W/O HOOD	1	4	4	270	270
570-0717	RAINDROPS ACTIVITY PANEL	1	2	2	8	8
570-1557	EVOLUTION TALL CURVED TOP BAR...	1	0	0	114	114
570-1558	EVOLUTION TALL CURVED TOP BAR...	1	0	0	114	114
570-2626	NATURE PLAY PIPE WALL	1	0	0	39	39
600-0104	NPPS SUPERVISION SAFETY KIT	1	0	0	3	3
660-0103	MAINTENANCE KIT, STRUCTURE	1	0	0	7	7
660-0104	INSTALLATION KIT, STRUCTURE	1	0	0	5	5

ITEM 526-S DECORATIVE STEEL SPRAY FIXTURES

1. DESCRIPTION:

Under this Item, the Contractor shall furnish and install DECORATIVE STEEL SPRAY FIXTURES (including Activation Bollard, where indicated) on concrete footings, all in accordance with the plans, specifications, and directions of the Engineer. In addition, the Contractor shall furnish extra material to D.P.R. M&O as specified under the heading EXTRA MATERIALS.

2. MATERIALS:

Footings: Shall be 3,200 psi Average Concrete.

Decorative Steel Spray Fixtures: Spray fixtures shall be as manufactured by; VORTEX Aquatic Structures International, Inc., Montreal, Quebec, Canada, or approved equal.

Reference specification from VORTEX, - see Attachment A

Reference cut sheets for spray fixtures, layout and installation – see Attachment B

Contact: PlaySafe Playground Systems of New York;
Sales Representative: Sal Romanello; +
Phone: (516) 677-9240, Email: Playgroundman@msn.com; Website: www.playsafeNY

Spray fixtures shall be constructed of Schedule10, Type 304/304L stainless steel to form various features of varying heights as shown on the drawings. A variety of spray features including but not limited to water arch, water cactus, water cane, water column, etc., shall be set on a concrete foundation, at the proper elevations, as per the manufacturer's recommendations. All components shall include all anchor hardware and stainless steel fasteners.

Each fixture shall have a one inch (1") male or a one and one half inch (1-1/2") threaded female water inlet attached at a point relative to the bottom of the fixture to facilitate water hook up.

In-Ground Sprays: In-ground sprays shall be constructed of minimum Schedule10, Type 304/304L stainless steel as per the sizes shown on the drawings. Each fixture shall have a one inch (1") threaded female water inlet attached at a point relative to the bottom of the fixture to facilitate water hookup. Sprays shall be equipped with a removable brass cover and shall be set on a concrete base in the locations indicated on the plans and approved Shop Drawings.

Flush Mounted Jets: Flush mounted jets shall be constructed of 2" diameter, Schedule10 (minimum) Type 304/304L stainless steel housing threaded to accept tamper resistant brass nozzle. The nozzle shall produce a single water stream. The direction of the water stream shall be adjustable to a maximum of 25 degrees from the vertical. A special tamper resistant tool and a winter cap shall be included with the assembly. The water inlet connection shall be 3⁄4" NPT male stainless steel. Flush mounted jets shall be set on a concrete

base in the locations indicated on the plans and approved Shop Drawings.

Nozzles: Where applicable, spray fixtures shall contain either interchangeable five (5) piece solid brass nozzles, or one piece in-pipe brass nozzles, and shall be concealed in a recessed nozzle socket to ensure that all spray devices are concealed within the spray fixture. Nozzles must be of tamper resistant design, secured in the nozzle socket by means of security tooling specifically designed to fit only hardware, nozzles, and fasteners. All nozzle installation shall be performed after the thorough flushing of the entire system (see Testing). Nozzles shall be secured as per manufacturer's installation instructions to the satisfaction of the Engineer.

Coating: Fixtures shall receive a polyester powder coat, similar to that manufactured by Tiger Drylac U.S.A. Inc., or approved equal. The shop coat shall conform to manufacturer's recommendations for surface preparation and mil. thickness of coating. The color shall be as indicated on the plans.

Activation Bollard: Where shown on the drawings, activation bollard shall be provided by the manufacturer. The bollard shall be constructed of stainless steel, Schedule 10, Type 304/304L, with powder coated external finish (see Coating). There shall be a stainless steel connection supplied for drainage.

The activator shall operate on 24V and shall be accessible by removing the activation cap or back door with a special tamper-resistant tool provided by the manufacturer of spray fixtures. There shall be an internal stainless steel conduit from the activator to the underground conduit. A reducing coupler shall be provided as needed to connect to the conduit. All wiring shall be as specified and approved by the manufacturer of spray fixtures.

Programmable Controller: The controller shall be a UL approved control panel with following specifications:

- Time Switch: The time switch shall be a 24 Hour/ 7 Day programmable digital time switch with a 100 hour battery backup system in case of power failure. The switch shall have the ability to program a different schedule for each day of the week or have several days operate on the same schedule.
- Timers: Timers shall be two solid states to activate the valves. They shall be individually set and each has range of 0.1min to 30hours.
- Transformer: Transformer shall be 120V primary/24V secondary with a built in electrostatic shield -protection.
- Selector switches: Selector switches shall be three positions to select among automatic manual and off mode.
- Enclosure: Enclosure shall be watertight fiber reinforced electrical enclosure with quick release latches that can be secured with a padlock.

Solenoid Valves: The Solenoid valves shall be a normally closed 24 VAC, 50/60 Hz, solenoid actuated glove pattern with a balanced pressure diaphragm as manufactured by Rain Bird Sprinkler Corp., Glendora, California or approved equal.

The valve shall have a manual flow control for manual opening and closing the valve without electrically energizing the solenoid. The valve shall have a flow range of 5 to 40 GPM for 1" diameter and 20 to 130 GPM for 1 1⁄2" diameter. The operating pressure shall be 15 to 220 PSI. At 24AVC average, inrush current shall

not exceed 0.41 amps. Average holding current shall not exceed 0.23 amp. The valve body and bonnet shall be constructed of brass and all other internal parts shall be made of bronze and stainless steel to ensure corrosion resistance.

Flow Distribution Manifold: The manifold shall be constructed of three (3") inch, Schedule 10 (minimum) Type 304/304L stainless steel pipe, with female threading at both ends. Unit shall be factory assembled and water pressure tested. It shall be equipped with pressure gauge, mounting brackets and anchor bolts for mounting on a concrete wall.

Copper Tubing: The water service pipe shall be hard temper Type "K" copper tubing meeting the Department of Purchase Specification No. 32-T-1.64 and ASTM No. B88-1974. All tubing and fittings shall be as specified and paid for in the 'Copper Tubing' Item. Copper tubing and fittings are to be supplied from valves on the water supply line to the fixtures, with the connection at the fixture to be made with a dielectric coupling.

Fittings: Fittings shall be approved red brass Class "A" threadless type, containing no less than eighty five percent (85%) copper, adaptable for copper tubing.

Joints: Joints shall be made by soldering, using 95-5 tin antimony solder.

Hardware: All hardware, fittings, and fastenings shall be as indicated on the shop drawings and as required to complete the installation. Lag bolts shall be of best quality stainless steel with side- slot flat type vandal proof head in the sizes indicated on the plans. Anchors shall be stainless steel in the sizes required. Tamper proof hardware shall be stainless steel.

Exterior Control Wires: Control wires shall be 24-volt solid wires U.L. approved for installation in conduit. Minimum wire size: 14 gauge; 12 gauge for common wire.

PVC Conduit for Control Wiring: All underground exterior 24 volts control wiring for activation bollard shall be installed in PVC rigid (non-metallic) conduit with fittings, approved equal to UL listed Carlon Plus 40 Rigid PVC non-metallic conduit. The conduit shall be manufactured to NEMA TC-2 Federal Specifications and UL 651 Specifications and carry respective UL listing and UL labels. The cement for PVC rigid conduit shall be approved equal to all weather quick set cement (5° – 100°F) Series VC9981 through VC9984.

Sleeves For Control Wires: Sleeves shall be installed under all walks and paving and where indicated on drawings. Sleeves shall be PVC schedule 40 or galvanized heavy wall steel pipe conduit, as shown on the drawings.

Above Grade Equipment Cabinet: Shall be Vortex outdoor aluminum cabinet of the appropriate size and dimensions to accept and house the water distribution system for the Decorative Steel Spray Fixtures and should include but not be limited to the manifold, thread connections for water inlets and outlets, prewired solenoid valves sized to operate the system and any other related components to be installed for the successful operation of the completed system.

3. EXECUTION:

Excavating for Foundation: All excavation shall be cut accurately to required lines and dimensions for work

on drawings, and shall be large enough to provide adequate clearance for the proper execution of the work within them.

Cast in Place Footings Inspection: When the excavation has been carried to the required depth, as shown on the drawings, the Contractor shall do no more work until after the inspection by the Engineer, who shall order the foundation work to proceed, or further excavation as the conditions indicate, and no other work shall be done until the excavation has been approved by the Engineer.

Forms: Forms for footings shall be lined with exterior grade plywood. The formwork shall be coated with an approved oil or lacquer.

Curing: All finished concrete shall be protected and kept moist continuously for three days, as directed by the Engineer.

Water Feature Fixtures: Spray fixtures shall be installed in accordance with the manufacturers written directions. Entire assemblies shall be installed in accurate locations, square and plumb on concrete footings and in required locations to surrounding finished grade, as shown on the plans. Anchor bolts shall be accurately set, plumb and true, in concrete footings, using templates supplied by the manufacturer.

Electrical work: A Licensed Electrician shall perform all electrical work. This includes the connection of the power supply and activation bollard to the controller. All field wiring shall be waterproof with heat shrink-wrapping.

Field Connection: All field connections to be made by a Licensed Plumber,

Testing: Before backfilling, the entire system shall be pretested and inspected. This shall include maintaining full pressure on the entire system for no less than one hour. Following the pressure test, it is imperative that all components be flushed by running the water supply through the fixture for a period of time to ensure all debris has been removed from the entire system prior to installation of any nozzles and in the presence of the Engineer. Nozzles shall be secured to the spray fixtures utilizing the security tooling provided by the manufacturer and all work shall be performed to the satisfaction of the Engineer. After paving is completed, all nozzles shall be adjusted and secured for proper operation and spray patterns, to the satisfaction of the Engineer.

M & O Training and Demonstration: After testing is completed and approved by the Engineer, a training and demonstration session shall be held for the M&O staff. The installed spray feature system shall be demonstrated for the district M & O Staff. The demonstrations shall include manual and automatic operations. The demonstration shall also include identification and operation of each component, trouble shooting for each component, winterizing the system, removal and replacement of defective components, general and specific requirements for system maintenance, and a check list for frequent attention of components. Highlights of the demonstration, including identification of components shall be videotaped for future M&O training.

O & M Manual & Videotape: The Contractor shall furnish six (6) copies (see Submittals) of the O & M Manual (Operation & Maintenance Manual) for the spray shower system and the associated mechanical system. The manual shall include a checklist for trouble shooting and corrective measures in addition to operation and

maintenance instructions. The Contractor shall also furnish an instructional video (DVD or flashdrive) of highlights of the M & O Training and Demonstration, including identification of components of the spray shower system.

EXTRA MATERIALS: The Contractor shall furnish (furnish only, not install) and deliver, to Nassau County Parks Department Maintenance and Operations, additional new materials obtained from the approved spray equipment manufacturer. Contractor shall also furnish to the Project Resident Engineer any catalogs, invoices, statements, etc. for verification that a complete set of all maintenance and operations manuals, Repair Kit tools, materials, etc. have been furnished. All furnished material shall be properly identified with the installation location. Extra new materials shall include the following:

1 (One) - Tools and Hardware Maintenance Repair Kit, complete with toolbox, fastener, tamper resistant tool wrenches for each nozzle size included with the equipment. The repair kit shall be clearly marked with the Contract Number and the Playground name. Marking shall be done with permanent marker or other method approved by the Engineer.

10 (Ten) – Winterizing Caps for In-Ground Sprays shall be provided if these spray features are included in the equipment.

4. SUBMITTALS:

Shop Drawings: The Contractor shall submit Shop Drawings of the spray fixtures (including spray nozzles and colors), activation bollard, programmable controller, solenoid valve, flow distribution manifold for approval.

Operation and Maintenance Manual: The Contractor shall furnish an Operation and Maintenance (O & M) Manual prepared in conjunction with the manufacturers of equipment in this specification. The O & M manual shall contain the following:

1) Description of system operation and operating modes.
2) Start-Up Procedures.
3) Troubleshooting and Repair Guide.
4) List of parts with their model numbers.
5) Electrical diagram showing the valve assembly, the controller, the activation bollard, the power supply, and all operating switches.
6) O & M Manual & Videotape: The six (6) copies of the Operation & Maintenance Manual and one (1) instructional videotape (all labeled with name of site and contract number) shall be distributed by the Engineer as follows:
   - One (1) laminated manual to be kept at the site, either in the equipment room or in the equipment vault.
   - One (1) O&M manual and one (1) instructional videotape to Parks Training Maintenance Staff.
   - Two (2) manuals to Borough Supervisor of Mechanics (S.O.M.).
   - Two (2) manuals to Construction division (file, map file).

5. MEASUREMENT AND PAYMENT:

For furnishing and installing all DECORATIVE STEEL SPRAY FIXTURES (including Activation Bollard, where indicated) complete, in accordance with the plans, specifications, and directions of the Engineer, the Contractor shall receive the LUMP SUM price bid.

The price bid shall be a LUMP SUM, and shall include the cost of all labor, materials, equipment, and incidentals necessary or required to complete the work including unclassified excavation, backfill, concrete footings, hardware, fittings, cabinets, dielectric coupler, activation bollard, programmable controller, control panel, solenoid valves, drain valves, flow distribution manifold, Electrical conduit & control wiring (from electrical panel to activation bollard), testing, training and all components integral with the spray fixtures, in accordance with the plans and specifications, to the satisfaction of the Engineer.

The Agency will retain ten (10%) of DECORATIVE STEEL SPRAY FIXTURE(S) bid amount until the Contractor completes the requirements of the Testing, M & O Training and Demonstration, and O & M Manual & Videotape sections of this specification, to the satisfaction of the Engineer.

In addition, the Contractor shall deliver EXTRA MATERIALS as outlined above to Nassau County Parks Department. M&O. No additional payment shall be made for extra materials. The Contractor shall include cost in the bid price. Failure to supply EXTRA MATERIALS shall result in the County taking a Total Credit of $150.00 (one hundred and fifty dollars), regardless of number of units installed.

Backflow Preventer, Water Meter, Booster Pump, Copper Tubing, Gate Valves, Globe Valves, Valve Boxes, Broken Stone and Electric service to the panel, where applicable, shall be paid for separately under their respective Contract Items.

END OF SECTION

VORTEX

Part 1: GENERAL CLAUSES

The aquatic play products shall be suitable for installation in municipal and commercial aquatic facilities and public play areas.

Products shall be specifically designed for the use by children and adults and follow the ASTM F2461-09 norm. The manufacturer should have an ISO 9001:2015 Certified Quality Management System. In addition, products shall be manufactured by a company that has at least five (5) years of experience in the design and engineering of children's aquatic play areas.

Any aquatic play product belonging to a new product line or series should demonstrate meeting the effective norm or show the conformity and resistance of the prescribed materials if it is proposed equivalency. The contractor or manufacturer must demonstrate meeting specifications by providing technical documents and drawings to be included in their bid proposal.

1.1 PRODUCT CONSTRUCTION

A. **Play Products:** All aquatic play products installed above and below grade shall be manufactured from 304/304L stainless steel. The anchoring system shall be manufactured from 304/304L stainless steel. Rigid centricast fiber reinforced (FRP) and/or molded fiberglass, PVC, filament wound tubing, Galvanized Steel, or Aluminum shall **not** be utilized for any above or below grade play product structures.

B. **Mounting and Assembly Hardware:** All hardware and anchoring systems shall be 304/304L or 316 stainless steel. All Play Products and Ground Spay systems shall include an integrated anchoring and leveling system facilitating installation and a flush surface finish. Exposed and accessible hardware shall be tamper resistant, requiring a special tool for removal to deter vandalism and theft.

C. **Spray nozzles, caps and heads:** Shall be manufactured from lead free brass, UHMWPE or Polyurethane and shall use tamper resistant tools for installation and removal. PVC, Nylon, and Delrin™, shall not be utilized. All grade level play products are to be furnished with appropriate winterization caps.

D. **Painted Finish:** Shall be a polyester smooth glossy heat-cured powder coat that is UV and chemical resistant and suitable for public spaces.

E. **Material for Paneling, Signage, Water Deflection, and Toe Guards:** All Polyethylene, Polyurethane, Elastomers and Seeflow Polymers used for paneling, signage or water deflection shall be resistant to chlorinated water and be ultraviolet stabilized to inhibit sunlight fading.

F. **Safety & Craftsmanship:** All accessible edges shall be machined to a rounded finish. All welds shall be watertight, buffed smooth or polished to a non-visible finish and factory pressure tested. Accessible nozzles and spray heads shall be recessed to ensure a completely safe play environment with no pinch points, head entrapments or protrusion hazards. All products shall be designed in accordance with ASTM F1487, ASTM F-2461 and CSA Z614-98 regulations for public playgrounds.

G. **Lexan Polymer:** The Lexan Polymer shall be specially selected for aquatic play products and shall have the following characteristics: translucent, highly resistant to shock and impact vandalism and must be non-flammable. The polymer shall present dimensional stability a high resistance towards chemical products, ultra violets rays and be transparent presenting crystal clear surface throughout.

H. **Seeflow Polymer:** The Seeflow Polymer shall be specially selected for aquatic play products and shall have the following characteristics: translucent, highly resistant to shock and impact vandalism and must be non-flammable. The polymer shall present dimensional stability a high resistance towards chemical products, ultra violets rays and be transparent presenting crystal clear surface throughout.

VORTEX

0611.2008

Please refer to PART 1: VORTEX GENERAL CLAUSES for all Play Product construction and installation information.

1.0 Play Product Specifications:

1.1. **Play Product Structure:** The Bollard Activator VOR-611.2008 shall be constructed of 304/304L stainless steel structural tubing with an outside diameter of 4½" (11.4cm) and a wall thickness of 0.120" (3mm). The upper part of the feature is constructed with a 45° elbow. The activator shall have no moving parts and run on a low voltage electrical supply. A capacitive sensorswitch to be used as an interface for processing user input activation. The activation cap shall consist of a high impact-resistant protective cap. The protective cap shall be constructed of 316 Stainless steel and powder coated, the s Steel Button integrated and shall be secured in place using tamper-resistant fasteners. The SAFESWAP™ anchoring and leveling system shall be used.

1.2. **Overall play product dimensions:** The Bollard Activator shall have an overall height of 39" (99cm) above the final grade.

1.3. **Play Product Interactivity:** The Bollard Activator shall be the direct interface between the users of the aquatic play area and the aquatic Play Products. The pre-programmed sequences of the aquatic Play Products shall be activated only when the touch-activated button on the Bollard Activator is touched by the user. The Bollard Activator has a led light activation signal.

1.4. **Hydraulic Activity/Components:** not applicable

1.5. **Hydraulic Requirements:** not applicable

VORTEX AQUATIC STRUCTURES INTERNATIONAL 328 AVRO, POINTE-CLAIRE, QUEBEC, CANADA H9R 5W5
email: info@vortex-intl.com - Website: www.vortex-intl.com - Tel: (514) 694.3868 - Fax: (514) 335.5413

VORTEX

55000.0430

Please refer to PART 1: VORTEX GENERAL CLAUSES for all Play Product construction and installation information.

1.0 Play Product Specifications:

1.1. **Play Product Structure:** SAFESWAP™ No1, 55000.0430, shall be constructed of 304/304L stainless steel. The SAFESWAP™ Anchoring System shall provide the ability to add/remove/interchange select play products without having to incur any additional infrastructure costs. The anchoring system shall have an integrated leveling system facilitating installation and a flush finish to the activity deck surface without any protruding bolts or hardware. The 4" pipe size play product shall be fastened directly to the SAFESWAP™ Anchoring system. The dead and live loads shall be distributed onto the SAFESWAP™ Anchoring system flange plate. A neoprene sealing gasket shall provide a water tight seal between the play product flange and the SAFESWAP™ flange. Mechanical fastening of the Play Products shall be used.

1.2. **Overall play product dimensions:** The overall height of the Product shall be 5 1/8" (13cm) with 11" (28cm) diameter.

1.3. **Play Product Interactivity:** Not applicable

1.4. **Hydraulic Activity/Components:** Not applicable

1.5. **Hydraulic Requirements:** Not applicable

VORTEX AQUATIC STRUCTURES INTERNATIONAL 328 AVRO, POINTE-CLAIRE, QUEBEC, CANADA H9R 5W5
Email: info@vortex-intl.com - Website: www.vortex-intl.com - Tel: (514) 694.3868 - Fax: (514) 335.5413

VORTEX

1001.4000

Please refer to PART 1: VORTEX GENERAL CLAUSES for all Play Product construction and installation information.

1.0 Play Product Specifications:

1.1. **Play Product Structure:** The Playsafe Drain No1, VOR-1001.4000 consists of a frame and a removable cover. The frame shall be constructed of a stainless steel 1/8" thickness X 2" width X 30" outside diameter bent flat bar and a stainless steel 29 3/4" outside diameter bent square tube. The deckgrating cover shall be stainless steel and constructed with 29 1/2" diameter and 1/4" thickness. The open area of the playsafe drain is 134.5 sq.in. (867.7 sq. cm) and the gap of the openings is 1/4 in (0.6 cm). This removable cover has an antiskid surface. The Playsafe Drain No1 has also an optional strainer basket. A form with the playsafe drain which has the capabilities to be leveled shall be inserted in the hole to create concrete drain box pit. Once the drain box pit is created, the form shall be removed. The Playsafe Drain No1 allows for multi drain access points. Each water line outlet connected to the drain box shall be a maximum of 8" in diameter at a minimum slope of 1% . The maximum GPM will be 629 at a maximum of 1.5 ft/sec through the grating.

1.2. **Overall play product dimensions:** The overall height of the Play Product shall be 0" (0 cm) above ground. The diameter of this feature shall be no less than 30" (76.2cm).

1.3. **Play Product Interactivity:** N.A.

1.4. **Hydraulic Activity/Components:** N.A.

1.5. **Hydraulic Requirements:** N.A.

VORTEX AQUATIC STRUCTURES INTERNATIONAL 328 AVRO, POINTE-CLAIRE, QUEBEC, CANADA H9R 5W5
[illegible]@vortex-intl.com - Website: www.[illegible] - Tel: (514) 694.3868 - Fax: (514) 335.5413

VORTEX

1.2 PLAY PRODUCT INSTALLATION

A. **Safeswap Anchoring and leveling Systems:** The Stainless Steel Safeswap Anchoring System shall provide the ability to add/remove/interchange select play products without having to incur any additional infrastructure costs. The anchoring system shall have an integrated leveling system facilitating installation and a flush finished to the activity deck surface without any protruding bolts or hardware. The Play Product shall be fastened directly to the Safeswap Anchoring system. The dead and live loads shall be distributed onto the Safeswap Anchoring system flange plate. A neoprene sealing gasket shall provide a water tight seal between the play product flange and Safeswap flange. Mechanical fastening of the Play Products to the activity deck slab shall be prohibited unless used on elevation with Toe Guards.

B. **Embedded Anchoring and leveling Systems:** The anchoring system shall have an integrated leveling system facilitating installation, ensuring product is plumb and installed at the desired height.

C. When applicable, templates shall be supplied to facilitate the installation of embedded anchoring equipment.

D. All play products shall have electrical grounding studs incorporated into their associated anchoring equipment. All play products shall be grounded by the installer per local codes.

E. All installation conduit wiring including electrical supply panel, PVC connections, piping, elbows, tees, play product assembly if required and other items relating to the installation shall be supplied by the general contractor.

F. Drawings and Instructions: Product drawings and installation manuals shall be supplied by the manufacturer for ease of installation.

1.3 PRODUCT DELIVERY, STORAGE AND HANDLING

A. All aquatic play products and associated equipment must be properly wrapped and secured in place while in transport to the project site. Care shall be observed during offloading and handling to prevent excessive stress and abrasions.

B. At the site, the play products and associated equipment are to be stored in safe areas, out of the way of traffic and other construction activities, until the actual time of installation. If required, safety barricades or other like precautions must be taken for the protection of public and adjacent property.

C. Protective wrapping on the aquatic play features must be left in place until construction work for the Splashpad is complete.

1.4 INSTALLATION

Vortex Certified Installer or experience with this manufacturer on at least five (5) similar installations is required.

1.5 COMMISSIONING OF THE SPLASHPAD

Upon completion of construction, the general contractor shall provide the owner/operator adequate training on facility operations and maintenance. The contractor may request that the equipment manufacturer and/or manufacturer's representative provide on-site start-up and training for the owner/operator.

VORTEX

1.5 SPLASHPAD QUALITY ASSURANCE

Provide evidence of commitment of quality craftsmanship as demonstrated by the following:

Splashpad Manufacturer Qualifications:

A. The products shall be designed and produced at a facility owned and directly supervised by the supplier.

B. All products shall be shipped from a single source.

C. A full time licensed engineer must be on-staff

D. A full time quality control manager must be on-staff

1.6 EQUIVALENCIES CLAUSES

To enable all tenders to be judged equitably, they shall be based on the specified products in this document and shown on the drawings.

A. The proposal for any substitute products must be attached to the bid or tender separately, identifying the substitute product by its trade name along with any savings it may represent for the client.

B. Following the opening of the bid or tender, only those substitutes proposed by the lowest bidder of the specified products, will be considered.

C. All substitute approval requests shall be accompanied by manufacturing drawings, including spray zones, sequencing, plumbing and electrical schematics and complete salt spray resisting testing data produced by an independent laboratory for coatings and a written warranty from the manufacturer.

No substitution or equivalency submitted will be considered if products to be considered are not part of manufacturer standard existing product line or a written proof that product has manufactured previously by the substitute manufacturer. Please refer to General Clauses 1.1

D. Each substitute sample must be presented to the owner/consultant within seven days following the opening of tenders. The sample must be completely operational. After this time period, the bidder will be required to supply the original specified product.

E. The owner/consultant reserves the right to grant or deny approval for proposed substitutions without prejudice to his rights and his decision shall be final. The above conditions apply to this section independently of any other clauses on the subject found in this document.

F. If applicable the products must be interchangeable and of equivalent quality to the materials already installed.

1.7 SPLASHPAD EQUIPMENT WARRANTIES

Minimum Warranty periods

Splashpad Play Events/Products & Skid Mounted Water Quality Management System Equipment

A. A 25 Year Warranty on stainless steel Play Events/Products, stainless steel anchoring systems and aluminum spheres.

B. A 10 Year Warranty on the reinforced fiberglass skid, sand filter fiberglass tank and cartridge filter fiberglass tank.

C. A 5 Year Warranty on brass components including; spray nozzles, spray caps and spray heads. High-density polyethylene components, polyurethane components, and ultra high molecular weight polyethylene components. The Subterranean vault (enclosure and access hatches), stainless steel

VORTEX

automated water distribution manifold, drain boxes, strainers, electrical enclosures, and chemical controllers.

D. A 2 Year Warranty on color coatings, stainless steel hardware & moving parts, fiberglass products, Seeflow Polymers, Soft Touch Elastomers (Toe Guards), subterranean water containments system, circulation pumps, chemical injection pumps, chlorinator systems, acid feed systems, polyvinyl chloride (PVC); piping, fittings, ball valves, check valves, cartridge elements, pressure gauges, chemical sensing probes, motor starters, electrical relays, terminal blocks, actuated valves, programmable logic controller (PLC controller), time switches, manual switches, transformers, breakers, electrical wiring and connections.

E. All warranties are to be managed by the equipment supplier.

VORTEX

7790

Please refer to PART 1: VORTEX GENERAL CLAUSES for all Play Product construction and installation information.

1.0 Play Product Specifications:

1.1. **Play Product Structure:** The Helico VOR-7790 shall consist of curved base support post made of 304/304L stainless steel tubing with an outside diameter of 3.50" (8.9cm) and a wall thickness of 0.30" (7.6mm), and a top section made of 304/304L stainless steel tubing with an outside diameter of 3.5" (8.9cm) and a wall thickness of 0.12" (3.0mm). The top section consists of two curved post branches welded in a Y-shape. All bending shall have no joint or ripples. The two branches will each have a SEEFLOW™ polymer panel attached using tamper-resistant fasteners. The top section spins freely by means of the TWIRLTEC™ mechanism and is self-propelled to spin. A total of ten (10) laminar jets create the water effect of the play structure. The nozzles shall be free of finger entrapment hazards. The SAFESWAP™ anchoring and leveling system shall be used. The TOEGUARD™ will then be added to protect children's toes from anchoring hardware.

1.2. **Overall play product dimensions:** The overall height of the Play Product shall be 177" (459 cm) above surface with a head clearance of no less than 136" (345cm).

1.3. **Play Product Interactivity:** Ten (10) laminar water jets create two water curtains projected downwards from the top section branches. As the self-propelled top section spins, the water curtains spiral around, creating an impressive effect for kids to play with. Kids can choose to cross through or avoid the advancing wall of water.

1.4. **Hydraulic Activity/Components:** The top section spins freely and is self-propelled. The ten (10) downward laminar water jets create two spiraling water curtains for kids to play with.

1.5. **Hydraulic Requirements:** The hydraulic requirements shall be 14-20 gpm (56-76 lpm) @ 11-16 psi (0.8-1.1 bar).

VORTEX AQUATIC STRUCTURES INTERNATIONAL 328 AVRO, POINTE-CLAIRE, QUEBEC, CANADA H9R 5W5
Email: info@vortex-intl.com - Website: www.vortex-intl.com - Tel: (514) 694.3868 - Fax: (514) 335.5413

VORTEX

7565.2008

Please refer to PART 1: VORTEX GENERAL CLAUSES for all Play Product construction and installation information.

1.0 Play Product Specifications:

1.1. **Play Product Structure:** The Huddle Spray No.3 VOR-7565.2008 shall be constructed of 304/304L stainless steel structural tubing with an outside diameter of 4½" (11.4cm) and a wall thickness of 0.120" (3mm). It shall consist of three (3) curved spray arms with two (2) Handle-Spheres in each spray arm. Each Handle-Sphere shall consist of two (2) half spheres constructed of high density, high impact aluminum, with a baked-on polyester powder coat finish. Each spray arm shall be constructed of one continuous piece of tubing rolled with no joints or ripples. Each spray arm shall have five (5) stainless steel nozzles along the curved post. Each nozzles shall be formed to the surface of the structure to eliminate finger entrapment and protrusion hazards. The SAFESWAP™ anchoring and leveling system shall be used.

1.2. **Overall play product dimensions:** The overall height of the structure shall be no less than 96" (243cm) with a head clearance of 86" (217cm).

1.3. **Play Product Interactivity:** Users can stand in the middle of the three spray poles for a thorough soaking.

1.4. **Hydraulic Activity/Components:** Each spray arm shall contain five (5) stainless steel nozzles secured on the curved post creating a water mist effect.

1.5. **Hydraulic Requirements:** The combined hydraulic requirements of all fifteen (15) spray nozzles shall be 15-30 gpm (57-113 lpm) @ 10-25 psi (0.7 – 1.7 bar).

VORTEX AQUATIC STRUCTURES INTERNATIONAL 328 AVRO, POINTE-CLAIRE, QUEBEC, CANADA H9R 5W5
Email: info@vortex-intl.com - Website: www.vortex-intl.com - Tel: (514) 694.3868 - Fax: (514) 335.5413

Play Product Structure :

The TwinSplash VOR 7242.2008 shall be constructed of steel structural tubing with an outside diameter of 4 ½" (11.4cm) and wall thickness of 0.237" (6 mm). The roof paneling shall be fabricated from ½" (12.7 mm) SEEFLOW™ Polymer and shall be fastened to the roof frame with tamper resistant hardware. The roof frame shall be constructed from ¼" (6.35mm) stainless steel sheet. The TwinSplash bucket shall be fabricated from a high-density fiberglass outer shell. The bucket shall pivot on two (2) UHMWPE bushing inserted in the shaft. An incorporated drain pilot hole shall prevent the accumulation of stagnate water during non-operational hours. The SAFESWAP™ anchoring and leveling system shall be used on one post and a surface mount for the other post.

Overall Play Product Dimensions

The overall height of the structure shall be no less than 182" (463 cm) with a head clearance of no less than 119" (302 cm). The width shall be 57" (144 cm) and the depth 45" (114 cm).

Play Product Interactivity

The TwinSplash shall create visual interest and build anticipation as the bucket fills and then dumps water over the roof so it's create two successive waves onto the immediate play area.

Hydraulic Activity / Components

The fiberglass bucket shall filled to a maximum and to not exceed 15 gallons of water. Once the water has reached the 15 gallons point the bucket will tip backward and release the water onto the roof, causing a large diameter of two successive waves.

Hydraulic Requirements

The hydraulic requirements shall be 10-15 GPM (38-57 lpm) @ 9-10 psi (0.6-0.7 bar).

VORTEX

7120.0000

Please refer to PART 1: VORTEX GENERAL CLAUSES for all Play Product construction and installation information.

1.0 Play Product Specifications:

1.1. **Play Product Structure:** The Water Journey™ - LABYRINTH VOR-7120.0000 shall consist of eight (8) LABYRINTH triangles, seven (7) 3° angled leveling support disks, seven (7) gates, three (3) strainers and three (3) watermills. The triangles shall be constructed of an integral yellow colored Glass Fiber Reinforced Concrete (GFRC) and shall be sealed together with a Backer Rod Sealant and caulking. The leveling support shall be constructed of one (1) flat disk and one (1) angled disc welded to a 304/304L stainless steel structural tubing with an outside diameter of 5.563" (14.13cm) and a wall thickness of .134" (3.4mm). The discs shall be constructed of stainless steel with a thickness of 0.375" (9.5mm). The water channels designed on the LABYRINTH triangles shall present five (5) types of bed shapes. The gates shall be constructed of a solid blue urethane material and assembled onto the LABYRINTH triangles with UHMW bushings, stainless steel embedded anchors and tamper resistant screws. The strainers shall be constructed of a solid turquoise urethane material and connected to strainer supports. The strainer supports shall be constructed of stainless steel tubing with an outside diameter of 1.05" (2.7cm) and a wall thickness of 0.083" (2mm). The strainers shall be assembled onto the LABYRINTH triangles with stainless steel embedded anchors and tamper resistant screws. The watermills shall be constructed of solid green urethane material with watermill supports. The watermill supports shall be constructed of stainless steel. The watermills shall be assembled onto the LABYRINTH triangles with UHMW spacers, stainless steel embedded anchors and tamper resistant screws. The Water Journey Embedded anchoring shall be used.

1.2. **Overall play product dimensions:** The overall size of the Water Journey - LABYRINTH shall be 314.5" (799cm) (L) X 194" (492cm) (W) X 8.75 (22.2cm) (H).

1.3. **Play Product Interactivity:** The Water Journey™ - LABYRINTH shall present different aspects of a stream, intertwining channels of water where players control props to manipulate water flow. The 5 different bed shapes of the channels modify the aspect of the stream and whet user's curiosity about his influence on the water stream.

1.4. **Hydraulic Activity/Components:** Manipulate water flow and texture with gates, strainers and watermills.

1.5. **Hydraulic Requirements:** There is no hydraulic requirements for this feature. A choice of two water sources basin is required to feed the Water Journey™ system.

VORTEX AQUATIC STRUCTURES INTERNATIONAL 328 AVRO, POINTE-CLAIRE, QUEBEC, CANADA H9R 5W5
Email: info@vortex-intl.com - Website: www.vortex-intl.com - Tel: (514) 694.3868 - Fax: (514) 335.5413

VORTEX

7126.0000

Please refer to PART 1: VORTEX GENERAL CLAUSES for all Play Product construction and installation information.

1.0 Play Product Specifications:

1.1. **Play Product Structure:** The Water Journey - Drain Basin VOR-7126.0000 shall consist of one (1) drain basin. The basin shall be constructed of Glass Fiber Reinforced Concrete (GFRC). The outside diameter shall be 30" (76.2 cm) in diameter and a thickness of 6½" (16.5 cm). The leveling support shall be constructed of one (1) flat disk welded to a 304/304L stainless steel structural tubing with an outside diameter of 4.5" (11.43cm). The disc shall be constructed of stainless steel with a thickness of 0.375" (9.5mm). The drain covers shall be constructed of white powder coated painted (RAL 9003) 304/304L stainless steel with an outside diameter of 4.9375" (12.54 cm) and a wall thickness of .125" (3.2 mm). It shall be mechanically assembled to the GFRC basin and sealed with caulking. Tamper resistance screws are used to secure the cover. The water outlet connection shall be 2" (50.8 mm) NPT. The Water Journey Embedded anchoring shall be used.

1.2. **Overall play product dimensions:** The overall outside diameter of the Water Journey - Drain Basin shall be 30" (76.2 cm) in diameter and a thickness of 6½" (17.8 cm)

1.3. **Play Product Interactivity:** N/A

1.4. **Hydraulic Activity/Components:** N/A

1.5. **Hydraulic Requirements:** The Water Journey - Drain Basin VOR-7126.0000 shall have a drain outlet connection of 2" (50.8 mm) NPT

VORTEX AQUATIC STRUCTURES INTERNATIONAL 328 AVRO, POINTE-CLAIRE, QUEBEC, CANADA H9R 5W5
Email: info@vortex-intl.com - Website: www.vortex-intl.com - Tel: (514) 694.3868 - Fax: (514) 335.5413

VORTEX

0535.2000

Please refer to PART 1: VORTEX GENERAL CLAUSES for all Play Product construction and installation information.

1.0 Play Product Specifications:

1.1. **Play Product Structure:** The Angled Twister VOR-535.2000 shall be constructed of 304/304L stainless steel structural tubing with an outside diameter of 4½" (11.4cm) and a wall thickness of 0.120" (3mm). It shall consist of one vertical post and an angle pipe connected by a 90° elbow. This feature consists of two (2) handle spheres and one (1) rotational joint. There shall be a threaded nozzle housing recessed into the rounded end cap. The rounded end cap shall be welded to the tubular structure using a polished, non-visible, watertight weld. The rotational joint shall be free of pinch points and protrusion hazards and contain no flexible hoses. Each handle sphere shall consist of two (2) half spheres and each shall be constructed of high density, high impact 356.2 aluminum, with a heat-cured powder coat finish. A 4" (10cm) solid lead-free brass 360° rotational joint consisting of a stainless steel bearing collar shall allow the head to rotate 360°. The SAFESWAP™ anchoring and leveling system shall be used.

1.2. **Overall play product dimensions:** The overall height of the structure shall be no less than 51" (129cm) above the final grade.

1.3. **Play Product Interactivity:** Users can rotate the top of the Angled Twister to cause the spray to fan out at odd angles.

1.4. **Hydraulic Activity/Components:** The nozzle housing shall be fitted with a brass 6-hole particularized soft stream spray nozzle. All nozzle systems shall be free of finger entrapment hazards.

1.5. **Hydraulic Requirements:** The hydraulic requirements shall be 8-10 gpm (30 – 38 lpm) @ 10-15 psi (0.7 – 1 bar).Low consumption nozzles that minimize water usage while maximizing spray effects are also available.

VORTEX

7230.2xxx

Please refer to PART 1: VORTEX GENERAL CLAUSES for all Play Product construction and installation information.

1.0 Play Product Specifications:

1.1. **Play Product Structure:** The Luna no.1 VOR-7230 consists of curved tubing made of 304/304L stainless steel with an outside diameter of 3.50" (8.9cm) and a wall thickness of 0.12" (3.0mm), and two (2) loops made of 304/304L stainless steel tubing with an outside diameter of 3.5'' (8.9cm) and a wall thickness of 0.21" (5.4mm). All bending shall have no joint or ripples. Each loop holds a molded polymer ORB attached to a stainless steel shaft and caps attached using tamper-resistant fasteners. The two (2) ORBS spin freely by means of a mechanism of low friction polymer bushings and is propelled to spin by the force of two (2) water jets each. On the curved tubes there are three (3) integrated and recessed nozzle housings welded into the post and shall be threaded to accept a PODSPRAY™. To the housing will be assembled the brass insert and its HDPE nozzle for PODSPRAY™. All nozzles are free of finger entrapment hazards. The SAFESWAP™ anchoring and leveling system shall be used. The TOEGUARD™ will then be added to protect children's toes from anchoring hardware.

1.2. **Overall play product dimensions:** The overall height of the Play Product shall be 56" (142 cm) above surface.

1.3. **Play Product Interactivity:** Kids can walk or crawl through the play structure to enjoy the sprays from the three (3) PODSPRAYS™. The two (2) ORBS are spun by nozzles but can be stopped, spun, and manipulated by kids. Depressing one or several PODSPRAYS™ will increase the speed of the ORB's spin and water effect's strength of other hydraulically connected features.

1.4. **Hydraulic Activity/Components:** Each of the three (3) PODSPRAYS™ nozzle shall produce three (3) water streams. The PODSPRAY™ when pressed, shall amplifying the water effects and increase the spin of the ORBS.

1.5. **Hydraulic Requirements:** The hydraulic requirements shall be 12-17 gpm (45-64 lpm) @ 5-10 psi (0.3-0.7 bar).

VORTEX AQUATIC STRUCTURES INTERNATIONAL 328 AVRO, POINTE-CLAIRE, QUEBEC, CANADA H9R 5W5
Email: info@vortex-intl.com - Website: www.vortex-intl.com - Tel: (514) 694.3868 - Fax: (514) 335.5413

VORTEX

0301.4000

Please refer to PART 1: VORTEX GENERAL CLAUSES for all Play Product construction and installation information.

1.0 Play Product Specifications:

1.1. **Play Product Structure:** The Geyser VOR-301.4000 shall be constructed of 304/304L with an outside diameter of 3" (7.62cm). The brass spray cap shall be threaded into the geyser body using a tamper-resistant tool. Tamper resistant brass winter cap shall be included. The anchoring system shall have an integrated levelling system facillitating installation and a plumb finished to the activity deck surface.

1.2. **Overall play product dimensions:** The overall height of the Play Product shall be 0" (0 cm) above ground.

1.3. **Play Product Interactivity:** Users can touch the soft frothy water falling down in contrast to the more powerful streams spraying up from the centre.

1.4. **Hydraulic Activity/Components:** The spray cap shall have a ten (10)-hole spray pattern angled at 5° (degrees) from vertical so that multiple streams spray water out at symmetrical angles forming an elegant geyser effect.

1.5. **Hydraulic Requirements:** The hydraulic requirements shall be 5-10 gpm (19 – 38 lpm) @ 5-10 psi (0.3 – 0.7 bar). Low consumption nozzles that minimize water usage while maximizing spray effects are also available.

VORTEX AQUATIC STRUCTURES INTERNATIONAL 328 AVRO, POINTE-CLAIRE, QUEBEC, CANADA H9R 5W5
Email: info@vortex-intl.com - Website: www.vortex-intl.com - Tel: (514) 694.3868 - Fax: (514) 335.5413

VORTEX

0309.0000

Please refer to PART 1: VORTEX GENERAL CLAUSES for all Play Product construction and installation information.

1.0 Play Product Specifications:

1.1. **Play Product Structure:** The Water Tunnel No.2 VOR-309.0000 shall be constructed of 304/304L stainless steel structural tubing with an outside diameter of 1.9" (4.8cm) and a wall thickness of .109" (.28cm). It shall have four (4) equally spaced 3" (7.6cm) diameter stainless steel spray head housings welded to it. Each spray head housing shall be fitted with a spray cap assembly consisting of a brass locking ring and an adjustable brass spray sphere. All nozzle systems shall be free of finger entrapment hazards The Embedded anchoring and leveling system shall be used.

1.2. **Overall play product dimensions:** The overall height of the Play Product shall be 0" (0cm) above ground.

1.3. **Play Product Interactivity:** Users can run under the arch created by the water sprays to enjoy the mist and experience the feeling from the powerful water jets spraying up compared to the softer sprays falling down.

1.4. **Hydraulic Activity/Components:** The water effect from each spray head shall produce a single soft stream adjustable from the vertical position to a maximum of 25° from vertical. Rotating the adjustable spray nozzle 90° from the vertical position sets the spray head to its water-tight winterized position.

1.5. **Hydraulic Requirements:** The combined hydraulic requirements of all four (4) spray nozzles shall be 8-16 gpm (30 – 61 lpm) @ 5-10 psi (0.3 – 0.7 bar). Low consumption nozzles that minimize water usage while maximizing spray effects are also available.

VORTEX

7513.0000

Please refer to PART 1: VORTEX GENERAL CLAUSES for all Play Product construction and installation information.

1.0 Play Product Specifications:

1.1. **Play Product Structure:** The Fountain Spray №1 VOR-7513.0000 shall be constructed of 304/304L stainless steel structural tubing with an outside diameter of 3" (7.6cm). The lead-free brass spray cap shall be threaded into the stainless steel spray head housing using a tamper-resistant tool. Tamper resistant brass winter cap shall be included. The Embedded anchoring and leveling system shall be used.

1.2. **Overall play product dimensions:** The overall height of the Play Product shall be 0" (0 cm) above ground.

1.3. **Play Product Interactivity:** Users can experience a variety of water effects: the gentle streams falling down, mist from under the water arcs and higher pressure at the core.

1.4. **Hydraulic Activity/Components:** The lead-free brass spray cap shall have an eleven (11)-hole spray pattern, three (3) holes angled at 5° from vertical and eight (8) holes angled at 10° from vertical.

1.5. **Hydraulic Requirements:** The hydraulic requirements shall be 3-7 gpm (11.4 – 26.5 lpm) @ 1-4 psi (0.07 – 0.28 bar).

VORTEX AQUATIC STRUCTURES INTERNATIONAL 328 AVRO, POINTE-CLAIRE, QUEBEC, CANADA H9R 5W5
Email: info@vortex-intl.com - Website: www.vortex-intl.com - Tel: (514) 694.3868 - Fax: (514) 335.5413

VORTEX

7518.0000

Please refer to PART 1: VORTEX GENERAL CLAUSES for all Play Product construction and installation information.

1.0 Play Product Specifications:

1.1. **Play Product Structure:** The Side Winder VOR-7518.0000 shall be constructed of 304/304L stainless steel structural tubing with an outside diameter of 4½" (11.4cm). The lead-free brass spray cap shall be fastened to the body using tamper-resistant fasteners. Tamper resistant brass winter cap shall be included. The Embedded anchoring and leveling system shall be used.

1.2. **Overall play product dimensions:** The overall height of the Play Product shall be 0" (0cm).

1.3. **Play Product Interactivity:** Users can enjoy the eighteen water arcs created by the Side Winder.

1.4. **Hydraulic Activity/Components:** The spray cap shall have an eighteen (18) hole spray pattern with a combined angle of 10° from vertical.

1.5. **Hydraulic Requirements:** The hydraulic requirements shall be 5-8 gpm (19-30 lpm) @ 1-5 psi (0.1-0.3 bar).

VORTEX AQUATIC STRUCTURES INTERNATIONAL 328 AVRO, POINTE-CLAIRE, QUEBEC, CANADA H9R 5W5
Email: info@vortex-intl.com - Website: www.vortex-intl.com - Tel: (514) 694.3868 - Fax: (514) 335.5413

EQUIPMENT CABINET

COMMAND CENTER

THE IMAGE IS FOR REPRESENTATION ONLY.

HIGHLIGHTS

- Front and back access for an easier installation and maintenance
- Light aluminum frame for better heat dissipation
- Vandal proof and corrosion resistance
- Self-enclosed system featuring up to 20 valves
- Painted stainless steel manifold
- Drain access points for line winterization

VORTEX
1.877.586.7839 (free USA/CANADA)
+1.514.694.3868 (INTERNATIONAL)
vortex-intl.com • info@vortex-intl.com

THESE DRAWINGS PROVIDE A GENERIC OVERVIEW OF THE INSTALLATION. THEY ARE NOT PROJECT SPECIFIC OR REFLECT ANYCUSTOMIZATION UNLESS NOTED. PLEASE CONTACT VORTEX AQUATIC STRUCTURES INTERNATIONAL FOR MORE DETAILS.

A. A COMMON NEUTRAL MAY BE USED FOR UP TO TEN ELECTRIC VAVLES WHEN CONTROLLER IS REMOTE LOCATED
B. REFER TO P&E DRAWINGS FOR PIPE SIZES AND ELECTRICAL CONNECTIONS
C. REFER TO PRODUCT SPECIFICATION DOCUMENT FOR ADDITIONAL INFORMATION
D. CONCRETE SURFACE,VERIFY LOCAL CODES FOR TYPE, THICKNESS & REINFORCEMENTS REQUIREMENTS.
E. "BY INSTALLER" MAY REFER TO SERVICE PROVIDERS OTHER THAN EQUIPMENT MANUFACTURER. PLEASE REFER TO THE PROJECT SCOPE OF WORK FOR DETAILS OF RESPONSIBILITIES.
F. IF THE CONTROLLER IS REMOTE LOCATED, CONDUCTORS # 18 AWG AT 10' LONG ARE PROVIDED BY VORTEX. FOR QUANTITY SEE PIPING AND ELECTRICAL SCHEMATIC DETAIL.GROUNDING OF J-BOX DONE BY INSTALLER
G. DIRECTION OF FLOW FOR PLUMBING SHALL BE LABELED USING DIRECTIONAL SYMBOLS.
H. VALVES AND PLUMBING LINES SHALL BE LABELED WITH DESCRIPTION OF SOURCE OR DESTINATION.
I. OPTIONAL EQUIPEMENTS
J. INLETS CAN BE CONFIGURED UP TO TWO WITH:
   -3" NO BFP / PR
   -2" NO BFP / PR
   -2" WITH PR
   -2" WITH BFP / PR
K. OUTLETS CAN BE A COMBINATION UP TO 10 OF:
   -1" GATE VALVE
   -1.5" GATE VALVE
   -1" BRASS OR PVC SOLENOIDE VALVE WITH OR WITHOUT BALL VALVE
   -1.5" BRASS OR PVC SOLENOID VALVE WITH OR WITHOUT BALL VALVE
   -1" FAST ACTING SOLENOIDE VALVE
   -1.5" FAST ACTING SOLENOID VALVE
L. SEE PRODUCT INSTALLATION MANUAL FOR INSTALLATION TIPS

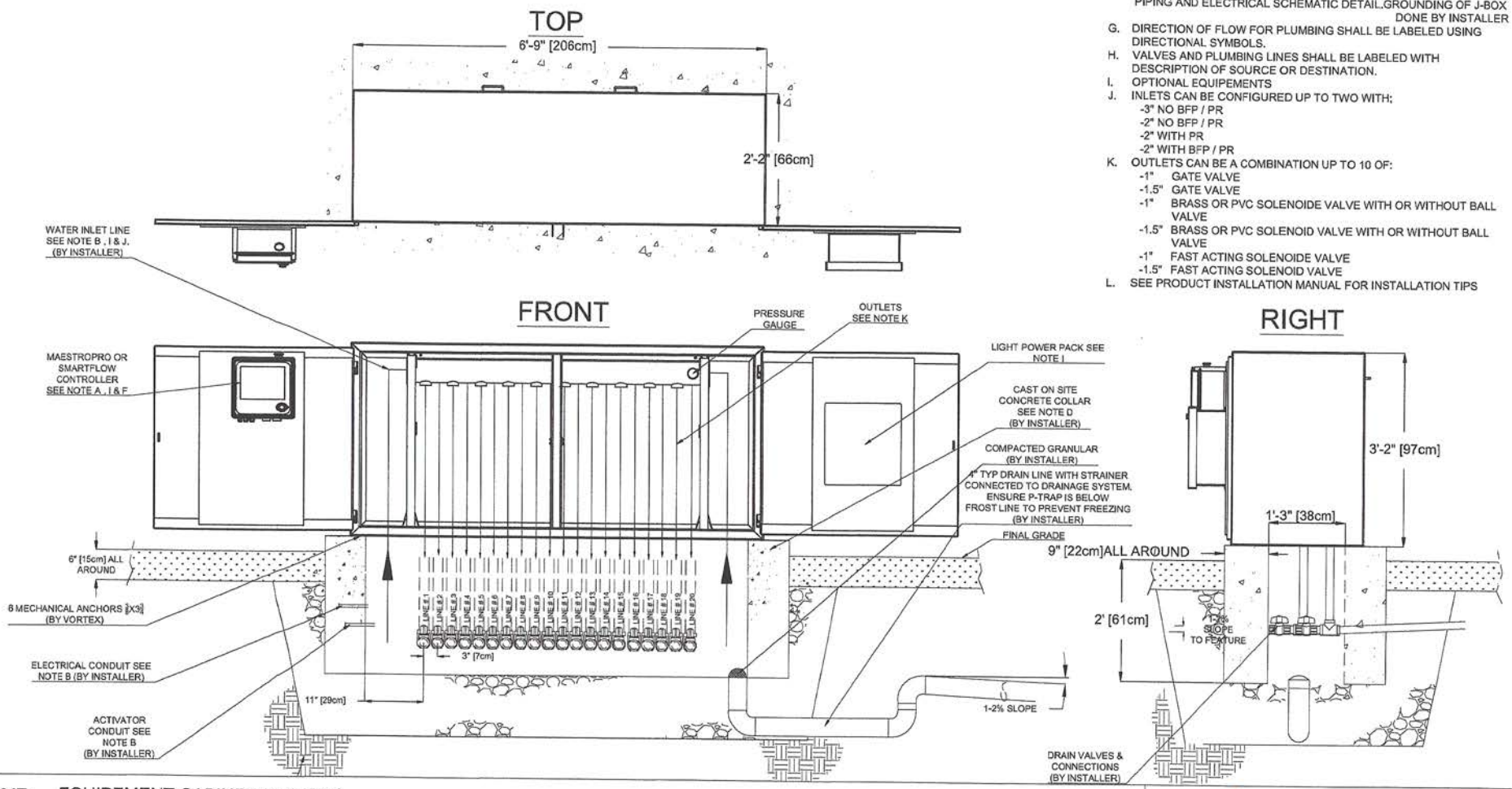

PRODUCT NAME: EQUIPEMENT CABINET 20 (EC20)

PRODUCT NUMBER: D1750	DATE: 24/APR/2018	SHEET NO: 1/2	11"x17" SHEET SIZE

VORTEX

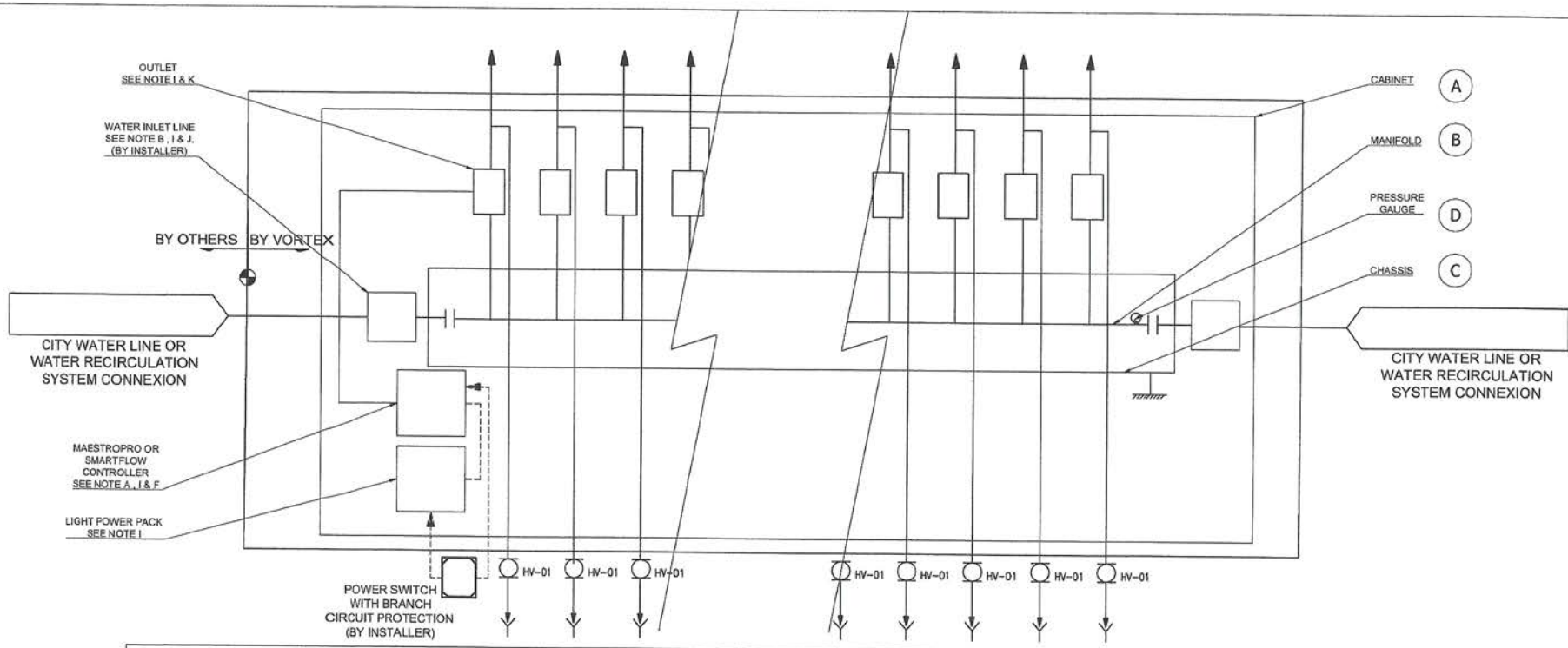

EQUIPMENT AND INSTRUMENTS LIST

ITEM	ITEM	PROVIDED BY	DESCRIPTION	QTY
A	CABINET	VORTEX	ALUMINUM EQUIPEMENT CABINET. FEATURING CONTROLLER READY LOCATION SEE PRODUCT SPECIFICATION SHEET FOR MORE DETAILED INFORMATION	1
B	WATER DISTRIBUTION MANIFOLD	VORTEX	PRE-ASSEMBLED AND WIRED UP TO 20 VALVES PAINTED STAINLESS STEEL MANIFOLD	1
C	CHASSIS	VORTEX	GALVANIZED STEEL CHASSIS SUPPORTING THE MANIFOLD ASSEMBLY	1
D	PRESSURE GAUGE	VORTEX	SEE PRODUCT SPECIFICATION SHEET	1

THESE DRAWINGS PROVIDE A GENERIC OVERVIEW OF THE INSTALLATION. THEY ARE NOT PROJECT SPECIFIC OR REFLECT ANYCUSTOMIZATION UNLESS NOTED. PLEASE CONTACT VORTEX AQUATIC STRUCTURES INTERNATIONAL FOR MORE DETAILS.

PRODUCT NAME: EQUIPEMENT CABINET 20 (EC20)

PRODUCT NUMBER: D1750 | DATE: 24/APR/2018 | SHEET NO: 2/2 | 11"x17" SHEET SIZE

VORTEX

1.0 Equipment cabinet 10 (EC10)

This above grade equipment cabinet with up to ten (10) valves shall be a pre-fabricated water distribution system containing piping, valves and electrical wiring. They shall be factory assembled, water pressure tested and delivered from the Splashpad equipment manufacturers facilities. They shall be equipped with threaded connections for the water inlet and slip-on for water outlets. The solenoid valves shall be pre-wired to the controller or to a junction box when the controller is placed in a remote location. The installer shall provide the plumbing equipment required from the water source to the water inlet or backflow preventer device and pressure regulator if so configured. The installer shall provide the plumbing equipment required from the water outlets to the Splashpad Play Products, as well as adequate drainage ball valves at the low point of each of the Play Product's water distribution lines when required. Should the controller be located remotely, the installer shall supply the electrical equipment required from the power switch with branch circuit protection.

2.0 GENERAL MATERIALS SPECIFICATIONS

ITEM	MATERIAL	ELECTRICAL	OVERALL DIMS	COATING	PAINT	QTY	Additional information
Cabinet	Al Al : Aluminum5032-H32 GAUGE 12	-	(38X53X26)" (97X135X66) cm	Powder-Coat	RAL RAL : Reichsaussch uß für	1	· Buffed welding · No sharp edges · Back access panel with tamper proof hardware · Main lockable door on hinges
Chassis	Pre-	-	(35X48X21)"	Electroplat	-	1	· No sharp edges
Manifold	4" Ø SS304 pipe with 10	-	32" 81cm	-	RAL 5017	1	· Buffed and watertight weldings · 150PSI pressure tested
Compound pressure gauge	SS304 / Brass	-	2-1/2" Ø 5cm Ø	-	-	1	· -30 ~ 60PSI reading · 1/4" NPT connexion
Mounting hardware	SS304	-	-	-	-	6	· Anchor kwik bolts to anchor cabinet on concrete base
Tamper proof	SS304	-	-	-	-	2	
Tamper proof	SS304	-	-	-	-	2	
Piping	SCH 40 PVC	-	-	-	-	N/A	· 150PSI pressure tested
Optional items							
Outlets	Possible						
½" FAV solenoid	BRASS	24Vac	-	-	-	Up to	· With or without ball valve · Water resistant solenoid

1-1/2" FAV solenoid	BRASS	24Vac	-	-	-	Up to	· ·	With or without ball valve Water resistant solenoid
1" solenoid	PVC or BRASS	24Vac	-	-	-	Up to	· ·	With or without ball valve Water resistant solenoid
1-1/2" solenoid	PVC or BRASS	24Vac	-	-	-	Up to	· ·	With or without ball valve Water resistant solenoid
1/2" Gate valve	PVC	-	-	-	-	Up	·	Rated up to 150PSI
1" Gate valve	PVC	-	-	-	-	Up	·	Rated up to 150PSI
Inlets	Possible							
3"	PVC	-	-	-	-	Up	·	Rated up to 150PSI
2"	PVC	-	-	-	-	Up	·	Rated up to 150PSI
2" PR	PVC and Brass	-	-	-	-	Up	·	Each inlet with 2" pressure
2" PR PR :	PVC and Brass	-	-	-	-	Up	·	Each inlet with 2" pressure
Controller	For a total of							
Maestro PRO	-	120Vac	(10X12X7)"	-	-	Up	·	See controller specification
Smartflow	-	120Vac	(10X12X7)"	-	-	Up	·	See controller specification
LED POWER PACK	-	120Vac	(14X16X7)"	-	-	Up	·	See controller specification

3.0 INSTALLATION CHARACTERISTICS

3.1. **Electrical Connections:** All main power electrical connections to the Splashpad Controller are to be performed per local codes.

3.2. **Drawings and Instructions:** Product drawings and installation manuals shall be supplied by the manufacturer for ease of installation.

1.0 General Materials Specifications:

1.1. **Stainless Steel Structural Tubing:** Shall be type 304/304L, structurally strong, durable, and resistant to corrosive environments. Rigid centricast fiber reinforced (FRP) and/or moulded fiberglass, PVC, filament wound tubing, Galvanized Steel, or Aluminium shall not be utilized for any distribution systems manifolds.

1.2. **Bronze:** All Backflow devices and Pressure Regulators shall be manufactured from this copper-rich alloy which is corrosion resistance and stronger than brass.

1.3. **Painted Finish**: Shall be a polyester smooth glossy heat-cured powder coat that is UV and chemical resistant and suitable for public spaces.

1.4. **Mounting and Assembly Hardware:** Shall be 304/304L stainless steel. Exposed and accessible hardware shall be tamper resistant, requiring a special tool for removal to deter vandalism and theft.

1.5. **Safety & Craftsmanship:** All edges shall be machined to a rounded edge. All welds shall be watertight, buffed smooth, or polished to a non-visible finish and factory pressure tested. Accessibility to the water distribution systems shall be such that no permit for confined spaces would be required as per OSHA Standards.

2.0 Wall-Mounted Command Centers:

The Wall-Mounted Command Center shall be a pre-fabricated water distribution system containing piping, valves and electrical wiring. They shall be factory assembled, water pressure tested, and shall be delivered from the Splashpad equipment manufacturers facilities. They shall be equipped with threaded connections for the water inlet and slip-on for water outlets. The solenoid valves shall be pre-wired to the controller or to a junction box (when the controller is placed in a remote location). The installer shall provide the plumbing equipment required from the water source to the water inlet or backflow device and Pressure regulator if so configured. The installer shall provide the plumbing equipment required from the water outlets to the Splashpad Play Products, as well as adequate drainage ball valves at the low point of each of the Play Product's water distribution lines (if applicable). Should the controller be located remotely, Vortex shall supply 10 feet of wire on the controller and 10 feet of wire on the junction box; if more than 20 feet of wire is required, the installer shall supply the rest of the electrical equipment. The grounding of the junction box shall be done by the installer.

2.1. **Water Distribution Manifolds:** Shall be constructed of 3 ½" outside diameter stainless steel structural tubing with a power coat painted finish. Each water distribution port shall be a 1-1/2" NPT connection. The manifold shall be equipped with a pressure gauge. All welded joints shall be watertight and pressure tested to 150 psi.

2.2. **Solenoid Valves:** There shall be one (1) solenoid valve installed on each of the water distribution ports for the Play Products. They shall be a normally closed 24 VAC 50/60 cycle solenoid actuated globe/angle pattern design. The valve pressure rating shall not be less than 150 psi. The valve body and bonnet shall be constructed of PVC with stainless steel fasteners. The valve shall have a manual override capability (manual open/close control). It shall house a fully encapsulated, one-piece solenoid. Each Solenoid valve shall have in integrated flow control adjustment valve stem for fine tuning of spray effects.

2.3. **Piping and Fittings:** All piping and fittings shall be at least schedule 40 PVC. All factory-assembled components, fitting and connections shall be water pressure tested prior to delivery.

2.4. **Electrical Enclosures, Conduit, Wiring and Connections:** All electrical wiring shall be # 18 AWG with a 600V rating. All electrical connections, enclosures, and conduit shall be Nema 4x watertight.

When configured with:

3.0 FT MAESTRO™ Controller (33907.0XXX):

3.1. The Maestro Controller shall be sized according to the number of I/O it is required to control. The Maestro Controller shall be factory programmed with spray sequences designed according to the requirements of the project. It shall have the flexibility to user modify the sequences using either a transportable USB Key, with an internet connection or via the Touch screen user interface.

3.2. A 24hr/7day user programmable agenda, which shall allow the user to set the operational hours of the facility, shall be incorporated into the Maestro Controller. For any further details about user interface, please refer to the User Guide Manual provided by Vortex.

3.3. The operating system shall contain a 120V AC and 100VA to 350VA primary / 24 VAC secondary or 240V AC and 100VA to 350VA primary / 24 VAC secondary transformers with built- in electrostatic shield protection. Transformer's power capacity shall vary according to the Splashpad size.

3.4. The operating system shall also contain a universal input 85-264 VAC primary / 12 VDC and 12.5A secondary power supplies with built-in electrostatic shield protection.

3.5. The operating system shall be housed in a corrosion resistant NEMA 4X rated enclosure.

3.6. The operating system shall have the capacity to receive signals from activation devices, operating on 3 to 24VDC/VAC.

3.7. The operating systems shall have the ability to provide a 24VAC auxiliary signal. This signal can be used to trigger a relay for Pumps, Chemical, UV system, or any other item following electrical specification.

3.8. The operating system shall have the capacity to operate based on a programmed sequence or based on a randomly generated sequence. In random mode each touch of the activator will generate a new unique sequence.

3.9. The operating system shall have the ability to soft-start ramp up the Splashpad to minimize potential water hammer.

3.10. The operating system shall have the capacity to operate a Rain Diverter Valve with a 24V AC max 250mA signal to prevent rain water to go into the sewer network when the Splashpad is not in function.

3.11. The operating system shall have the ability to control fast acting valves supplied by 24V AC max 1.5A each. For this, reference 33907.X1XX has to be chosen.

3.12. The operating system shall have the ability to automatically purge all water lines based on the user selected time and duration (i.e. every day at 5 am). It shall also, be configured to purge all lines after a user defined period of inactivity (i.e. after 4 hours of inactivity).

3.13. The operating system shall be supplied with a 10'' touch screen user interface with controls for each output, activation device(s), and agenda. These selector settings allow the user to select the operational mode of the components (i.e. Manual, Off and Automatic).

3.14. The operating system operates only in English for the moment.

4.0 Remote connection: if remote connection ability is required, the operating system shall be connected to internet. If there is no way to make a hard connection to an existing network, then Vortex can provide a pre-set 3G Cellular Router (sold separately) for any 3G covered location.

4.1. With additional connectivity kit (44900.0007R01), Maestro Controller shall have the ability to be controlled remotely through internet thanks to a 3G Cellular router. To perform this type of connection the area where the Splashpad TM and Maestro controller needs to be covered by a local mobile phone network.

4.2. The operating system shall have capability to be interconnected with any Maestro Expansion (33907.2XXX) or Maestro Light controller (33908.0XXX) or 3G Cellular Router (44900.0007) by using Ethernet RJ45 Cat6 cables. A maximum of 4 connections can be done in standard.

When configured with:

5.0 FT SmartFlow Logics™ Controller:

5.1. The Splashpad programmable logic controller shall be sized according to the number of outputs it is required to control. The programmable logic controller shall be factory programmed with a variety of spray sequence designed according to the requirements of the project. It shall have the flexibility to user modify the sequences using a Key Pad user interface. A battery backup and low battery alarm shall protect the system memory.

5.2. A 24hr/7day user programmable time switch, which shall allow the user to set the operational hours of the facility, shall be incorporated into the operating system. The time switch shall have the ability to be programmed with a different time schedule for each day of the week, and up to 2 time schedules per day.

5.3. The operating system shall be supplied with a key pad user interface with controls for each output, activation device(s), and time switch. The 2 line 20 character display screen shall be visible to 3ft, and with a 45 degree viewing angle.

5.4. The operating system shall be housed in a corrosion resistant NEMA 4X rated enclosure, complete with stainless steel lockable latches.

5.5. The operating system shall have the capacity to receive signals from activation devices, operating on 24VDC.

5.6. The operating system shall have the capacity to operate based on a programmed sequence or based on a randomly generated sequence. In random mode each touch of the activator will generate a new unique sequence.

5.7. The operating system shall have the capacity to accept an entry for a fixed run time interval. (i.e. run for x hrs, regardless of the operation time clock settings.)

5.8. The operating system shall have the ability to soft-start ramp up and ramp down the Splashpad to

minimize potential water hammer.

5.9. The operating system shall have the ability to automatically purge all water lines based on the user selected time and duration (i.e. every day at 5 am). It shall also, be configured to purge all lines after a user defined period of inactivity (i.e. after 4 hours of inactivity).

5.10. The operating system shall have the ability to be upgraded using DataKey memory stick.

5.11. The operating system shall have the option of using a membrane keypad locking mechanism, requiring a user configurable password to access the Controller functions.

5.12. The operating system shall have the ability to automatically purge all water lines based on the user selected time and duration (i.e. every day at 5 am). It shall also, be configured to purge all lines after a user defined period of inactivity (i.e. after 4 hours of inactivity).

When configured with:

6.0 WR MAESTRO™ Controller (33907.1XXX):

6.1. The Maestro Main Controller shall be sized according to the number of I/O it is required to control. The Maestro Main Controller shall be factory programmed with spray sequences designed according to the requirements of the project. It shall have the flexibility to user modify the sequences using either a transportable USB Key, with an internet connection or via the Touch screen user interface.

6.2. A 24hr/7day user programmable Agenda, which shall allow the user to set the operational hours of the facility, shall be incorporated into the Maestro Main Controller. For any further details about user interface, please refer to the User Guide Manual provided by Vortex.

6.3. The operating system shall contain a 120V AC and 100VA to 350VA primary / 24 VAC secondary or 240V AC and 100VA to 350VA primary / 24 VAC secondary transformers with built- in electrostatic shield protection. Transformer's power capacity shall vary according to the Splashpad size.

6.4. The operating system shall also contain a universal input 85-264 VAC primary / 12 VDC and 12.5A secondary power supplies with built-in electrostatic shield protection.

6.5. The operating system shall be housed in a corrosion resistant NEMA 4X rated enclosure.

6.6. The operating system shall have the capacity to receive signals from activation devices, operating on 3 to 24VDC/VAC.

6.7. The operating systems shall have the ability to provide a 24VAC auxiliary signal. This signal can be used to trigger a relay for Pumps, Chemical, UV system, or any other item following electrical specification.

6.8. The operating system shall have the capacity to operate based on a programmed sequence or based on a randomly generated sequence. In random mode each touch of the activator will generate a new unique sequence.

6.9. The operating system shall have the ability to soft-start ramp up the Splashpad to minimize potential water hammer.

6.10. The operating system shall have the capacity to operate a Rain Diverter Valve with a 24V AC max 250mA signal to prevent rain water to go into the sewer network when the Splashpad is not in function.

6.11. The operating system shall have the ability to control fast acting valves supplied by 24V AC max 1.5A each. For this, an additional slave module with reference 33907.2XXX has to be chosen.

6.12. The operating system shall have the ability to automatically purge all water lines based on the user selected time and duration (i.e. every day at 5 am). It shall also, be configured to purge all lines after a user defined period of inactivity (i.e. after 4 hours of inactivity).

6.13. The operating system shall be supplied with a 10'' touch screen user interface with controls for each output, activation device(s), and agenda. These selector settings allow the user to select the operational mode of the components (i.e. Manual, Off and Automatic).

6.14. The operating system operates only in English for the moment.

7.0 Remote connection: if remote connection ability is required, the operating system shall be connected to internet. If there is no way to make a hard connection to an existing network, then Vortex can provide a pre-set 3G Cellular Router (sold separately) for any 3G covered location.

7.1. With additional connectivity kit (44900.0007R01), Maestro Controller shall have the ability to be controlled remotely through internet thanks to a 3G Cellular router. To perform this type of connection the area where the Splashpad™ and Maestro controller needs to be covered by a local mobile phone network.

7.2. The operating system shall have capability to be interconnected with any Maestro Expansion (33907.2XXX) or Maestro Light controller (33908.0XXX) or 3G Cellular Router (44900.0007) by using Ethernet RJ45 Cat6 cables. A maximum of 4 connections can be done in standard.

8.0 Installation Characteristics:

8.1. **Electrical Connections:** All main power electrical connections to the Splashpad Controller are to be preformed per local codes.

8.2. **Drawings and Instructions:** Product drawings and installation manuals shall be supplied by the manufacturer for ease of installation.

9.0 Available configurations:

Quantity of valves	Components:	Inlet details:	Controllers:	Valve type:

FT : Flow trough
WR : Water reuse
BFR : Back flow preventer
PR : Pressure regulator

VORTEX
Vortex Aquatic Structures International
328 Avro St., Pointe Claire (Montreal), Quebec, H9R 5W5
Phone 514.694.3868 1.877.5VORTEX Fax 514.335.5414 www.vortex-intl.com

1.0 GENERAL MATERIALS SPECIFICATIONS:

1.1. **Equipment Enclosures:** Shall be made from corrosion resistant hot compression moulded fiberglass reinforced polyester which does not contain halogens. The enclosure shall provide indirect electrical contact protection for equipment and operators. Enclosures shall be UL listed per UL Standard 508A for NEMA 4X; CSA Certified per Standard C22.2-0, 0.4, 0.7, 0.6, 94 Type 3, 3R, 4, 4X, 12 and 13.

1.2. **Operating temperature:** MaestroPRO shall be able to operate from 32°F (0°c) to 131°F (65°c).

2.0 MAESTRO MAIN CONTROLLER–33907.12BX:

2.1. The MaestroPRO control panel shall be housed in a fiberglass corrosion resistant NEMA 1 rated enclosure.

2.2. The MaestroPRO control panel shall be supplied with a 10'' touch screen user interface with controls for each output, activation device(s), and operation hours. These selector settings allow the user to select the operational mode of the components (i.e. Manual, Off and Automatic).

2.3. The MaestroPRO control panel shall contain a 200VA transformer 120V AC primary / 24 VAC secondary or 240V AC primary / 24 VAC secondary transformers with built- in electrostatic shield protection.

2.4. Power consumption: Maximum power fully loaded forced manually is 200W. Power while in standard sequence in operation hours shall be approx. 100W, Power while in idle mode shall be approx. 12W – i.e. out of operation hours or without sequence running.

2.5. MaestroPRO control panel shall be protected by fuses sized according to voltage and transformer size.

2.6. The MaestroPRO control panel shall integrate 24 digital outputs with 24VAC (per output: max 1.6A inrush, max 0.3A nominal) and 12 digital inputs with selectable 12 or 5 VDC (1A max over all inputs).

2.7. The MaestroPRO control panel shall have the capacity to receive digital signals from activation devices or sensors, operating on 5 or 12VDC.

2.8. The MaestroPRO control panel shall have the ability to provide a 24VAC auxiliary signal. This signal can be used to trigger a relay for Pumps, Chemical, UV system, or any other item following electrical specification. All outputs are electrically protected against over consumption with resettable fuses.

2.9. The MaestroPRO control panel shall have the capacity to operate a Rain Diverter Valve with a 24V AC max 1.6Amp signal to prevent rain water to go into the sewer network when the Splashpad is not in function. That requires 2 outputs from Maestro control panel.

2.10. The MaestroPRO control panel shall have the ability to control fast acting valves supplied by 24V AC max 1.6Amp inrush each.

2.11. MaestroPRO control panel shall have the capacity to receive pulse signal (for instance for paddle wheel water meter, anemometer).

2.12. The MaestroPRO control panel shall have capability to be interconnected with any Maestro Expansion (33907.22BX) using a dedicated RJ45 connector (located on I/O board).

2.13. The MaestroPRO control panel shall have capability to be interconnected with max 1 Ethernet based item like the Maestro light controller (33908.0xxx) by using an Ethernet RJ45 Cat5 cable. If more than 1 Ethernet based items need to be connected, an Ethernet switch junction box (44900.0011) must be used.

2.14. MaestroPRO control panel shall have removable terminal blocks for easy wiring.

2.15. In case of emergency, pushing the red emergency button will power down the entire controller.

2.16. The Maestro firmware shall be factory programmed with spray and light sequences designed according to the requirements of the project. Users shall have the flexibility to modify sequence duration

VORTEX
Vortex Aquatic Structures International
328 Avro St., Pointe Claire (Montreal), Quebec, H9R 5W5
Phone 514.694.3868 1.877.5VORTEX Fax 514.335.5414 www.vortex-intl.com

specifically to each operation schedule directly through the interface. New sequences (created by Vortex) shall be added into the program using either a transportable USB Key or with an internet connection. A 24hr/7day user programmable Agenda, which shall allow the user to set the operational hours of the facility. Sequence quantity is not limited. For any further details about user interface, please refer to the User Guide Manual provided by Vortex.

2.17. Operation schedule shall be set by week day or by specific date (month and day number). For both cases, schedule is set by hours in the day (start/end time). Operation schedule quantity is not limited and all different schedules will be displayed in a paginated style.

2.18. The Maestro firmware operates in English, French and Spanish for the moment.

2.19. The Maestro firmware shall have the capacity to operate based on a programmed sequence.

2.20. The Maestro firmware shall have the ability to soft-start ramp up the Splashpad to minimize potential water hammer.

2.21. The Maestro firmware shall have the ability to automatically purge all water lines based on the user selected time and duration (i.e. every day at 5 am). It shall also, be configured to purge all lines after a user defined period of inactivity (i.e. after 4 hours of inactivity).

2.22. The Maestro firmware in the interface lets the user modify easily the water consumption while keeping the sequence capability.

3.0 REMOTE CONNECTION: if remote connection ability is required, the operating system shall be connected to internet.

3.1. A hard connection to an existing network can be set. MaestroPRO control panel integrates a LAN port set by default as DHCP with RJ45 physical connector.

3.2. MaestroPRO control panel shall include a built-in LTE/3G cellular module. In order to connect to internet, a NANO-SIM card previously activated by carrier must be inserted into the control panel on the Main board.

4.0 VOR-33923.XXXX SAFEGUARD MODULE (applicable if WR or WQMS):

4.1. The contractor shall provide and install the following Water Quality Management System Module as manufactured by VORTEX, 328 Avro St., Montreal, Quebec, Canada H9R 5W5, (514) 694-3868.

4.2. The Water Quality Management System Module shall be factory assembled and water pressure tested before delivery.

4.3. The Water Quality Management System Module shall be fully serviceable and accessible for ease of maintenance and use.

4.4. All electrical equipment, including flow switches, shall be tested before delivery.

4.5. All equipment shall be mounted directly onto a galvanized steel base using galvanized steel hardware prior to delivery.

4.6. Controller shall control electrical solenoid valves for play features and bypass with a 24V AC max 1.6Amp signal with a total of 10Amp over all 24 outputs with the included 200VA transformer.

4.7. The chemical controller shall have an alarm system that shall close all valves to the aquatic play features in case of a loss of proper water chemistry. The 120V AC from the chemical controller will switch a relay connected to the controller.

4.8. The chemical controller shall be wired to the Safeguard Module on site.

Vortex Aquatic Structures International
328 Avro St., Pointe Claire (Montreal), Quebec, H9R 5W5
Phone 514.694.3868 1.877.5VORTEX Fax 514.335.5414 www.vortex-intl.com

4.9. Controller shall control UV system (part of the UV module) with a 24V AC max 250mA signal and will be wired on site.

4.10. A flow switch shall be present on the feature pump to monitor flow and shut down the feature system in the event of no flow. It shall be wired to the Safeguard Module on site.

4.11. A flow switch shall be present on the flow cell located on the filter loop module to monitor flow and shut down the filter pump in the event of no flow. All valves to the aquatic play features will be closed until the filter no flow event is cleared.

Note: Modular WQMS has to be installed inside a closed room protected from the elements.

5.0 INSTALLATION CHARACTERISTICS:

5.1. **Electrical Connections:** All main power electrical connections to the Splashpad Controller are to be performed per local codes.

5.2. **Drawings and Instructions:** Product drawings and installation manuals shall be supplied by the manufacturer for ease of installation.

SPLASHPAD DIMENSION

TOTAL AREA :	3852 ft²	358 m²
SPRAY AREA :	3852 ft²	358 m²
GRID SIZE :	2 x 2 ft	0.6 x 0.6 m

PRODUCT LEGEND

REF	PRODUCT	QTY	GPM	LPM
A	Angled Twister VOR 0535	2	8.0	30.3
B	Bollard Activator N°3 VOR 0611	2	0.0	0.0
C	Water Journey - Labyrinth VOR 7120	1	7.5	28.4
D	Water Tunnel N°2 VOR 0309	1	10.0	37.9
E	Geyser VOR 0301	2	9.0	34.1
F	Helico VOR 7790	1	17.0	64.3
G	Huddle Spray N°3 VOR 7565	1	22.5	85.2
H	Luna N°1 VOR 7230	1	13.5	51.1
	Fountain Spray N°1 VOR 7513	2	10.0	37.9
	Playsafe Drain N°1 VOR-1001.4000	2	0.0	0.0
	Side Winder VOR 7518	1	6.5	24.6
	Twinsplash VOR 7242	1	12.0	45.4
	TOTAL	QTY	GPM	LPM
		16	116	439.2

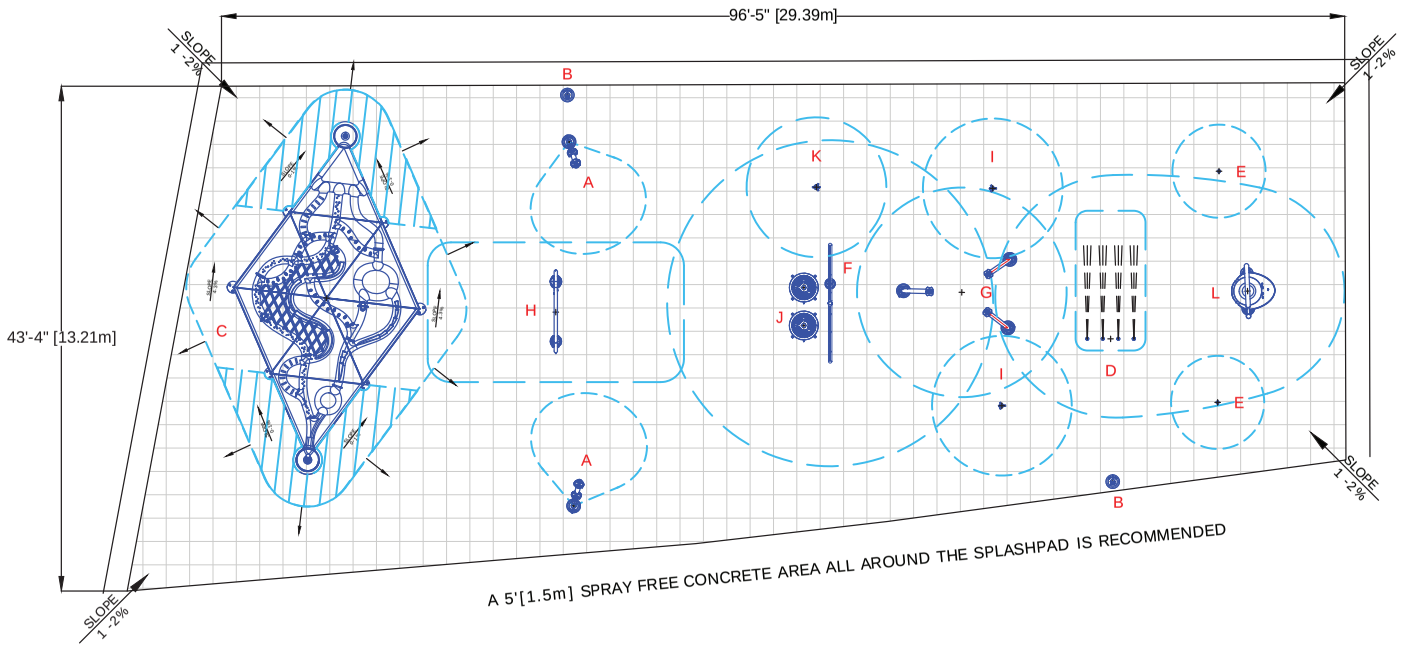

Centennial Park Splashpad, NY

34956 - Version D - *Low Flow

July 10, 2020

SPLASHPAD LAYOUT DRAWING

SCALE :3/32":1'

11" X 17" sheet size

PLAN VIEW

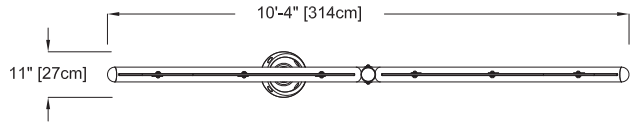

FRONT ELEVATION VIEW

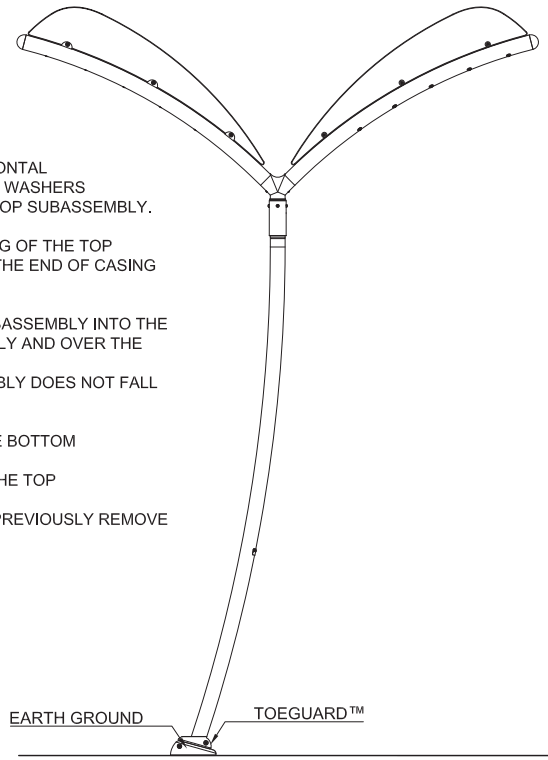

SIDE ELEVATION VIEW

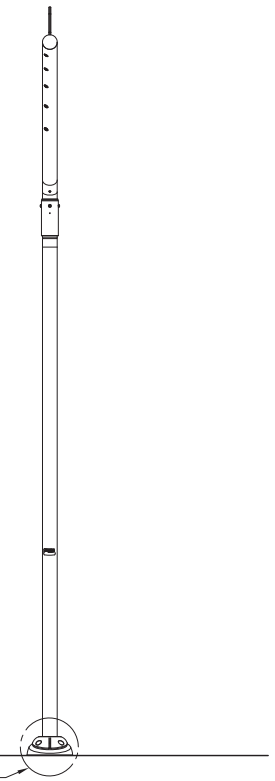

ASSEMBLY INSTRUCTIONS:

1- WHILE THE PRODUCT IS IN A HORIZONTAL POSITION, REMOVE THE SCREWS AND WASHERS FROM THE BOTTOM CASING OF THE TOP SUBASSEMBLY.

2- REMOVE TAPE OVER END OF CASING OF THE TOP SUBASSEMBLY. ENSURE BEARING IN THE END OF CASING DOES NOT FALL OUT.

3- SLIDE THE CASING OF THE TOP SUBASSEMBLY INTO THE CASING OF THE BOTTOM SUBASSEMBLY AND OVER THE SHAFT
ENSURE BEARING IN TOP SUBASSEMBLY DOES NOT FALL OUT.

4- ALIGN HOLES OF CASING FROM THE BOTTOM SUBASSEMBL
WITH THE HOLES OF THE CASING IN THE TOP SUBASSEMBLY.
RE-INSTALL WASHERS AND SCREWS PREVIOUSLY REMOVE FROM TOP SUBASSEMBLY.

5- INSTALL FEATURE ONTO ANCHOR.

PRODUCT NAME: HELICO		PRODUCT INFORMATION	
PRODUCT NUMBER: VOR-7790.2XXX	DATE: 02/17/17	SHEET NO: 1/1	11"x17" SHEET SIZE

VORTEX

PLAN VIEW

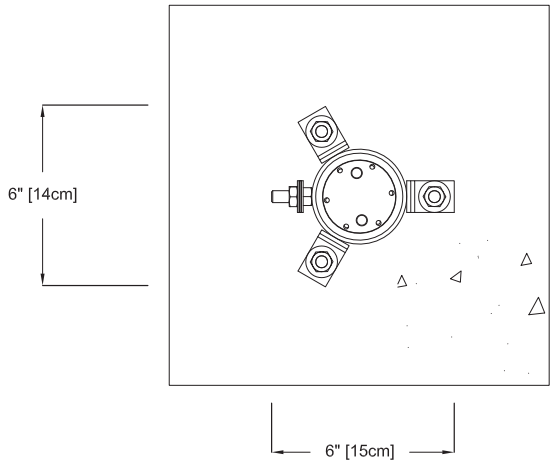

NOTE:
"BY INSTALLER/BY CONTRACTOR "MAY REFER TO SERVICE PROVIDERS OTHER THAN THE EQUIPMENT MANUFACTURER. PLEASE REFER TO PROJECT SPECIFICATION FOR DETAILS OF RESPONSIBILITY.

FRONT ELEVATION VIEW

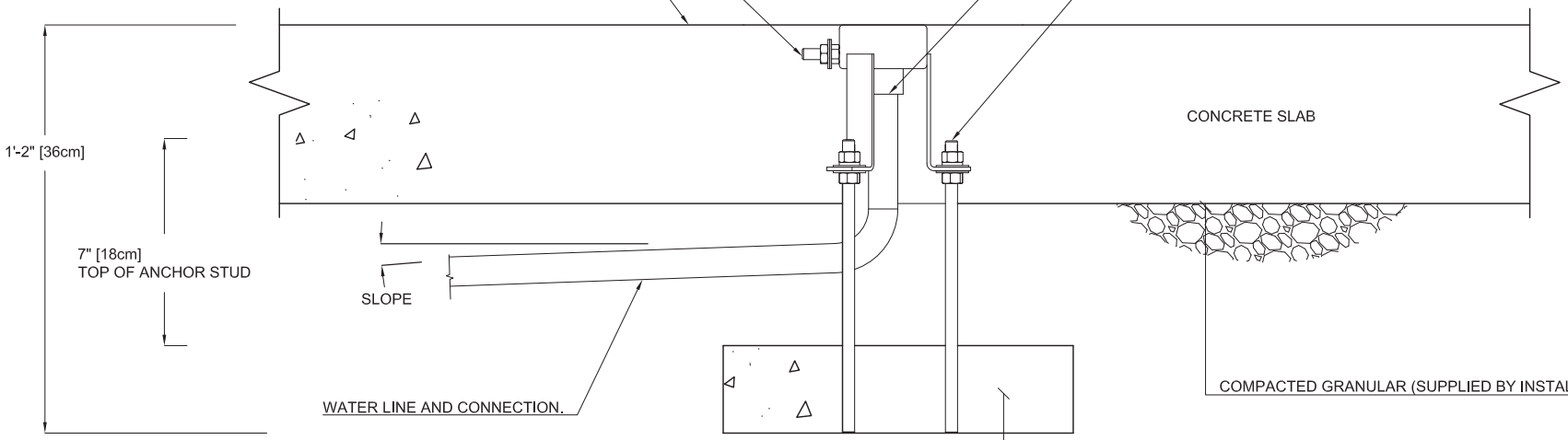

PRODUCT NAME: GEYSER		PRODUCT INFORMATION	VORTEX
PRODUCT NUMBER: VOR-0301.4XXX	DATE: 08/23/16	SHEET NO: 1/1	11"x17" SHEET SIZE

PLAN VIEW

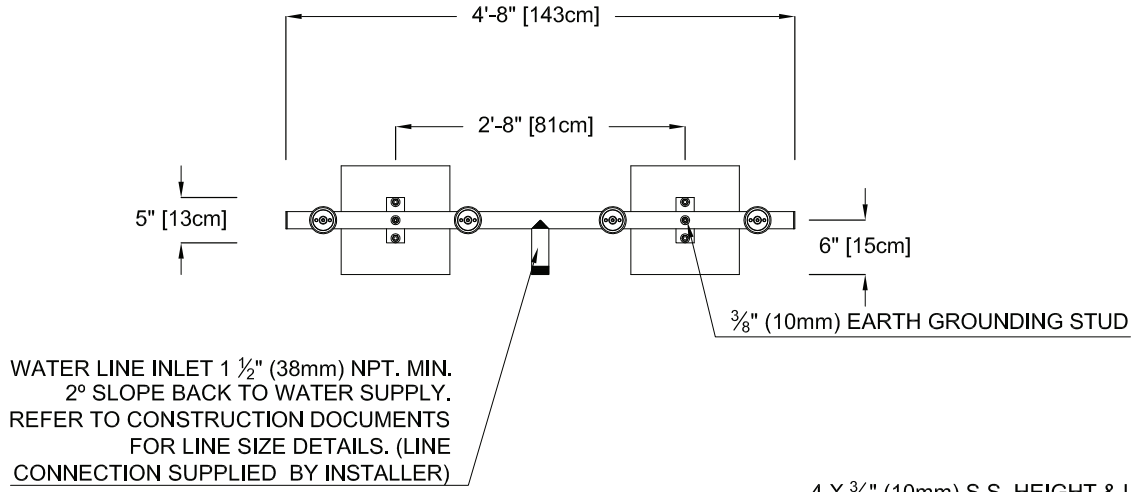

FRONT ELEVATION VIEW

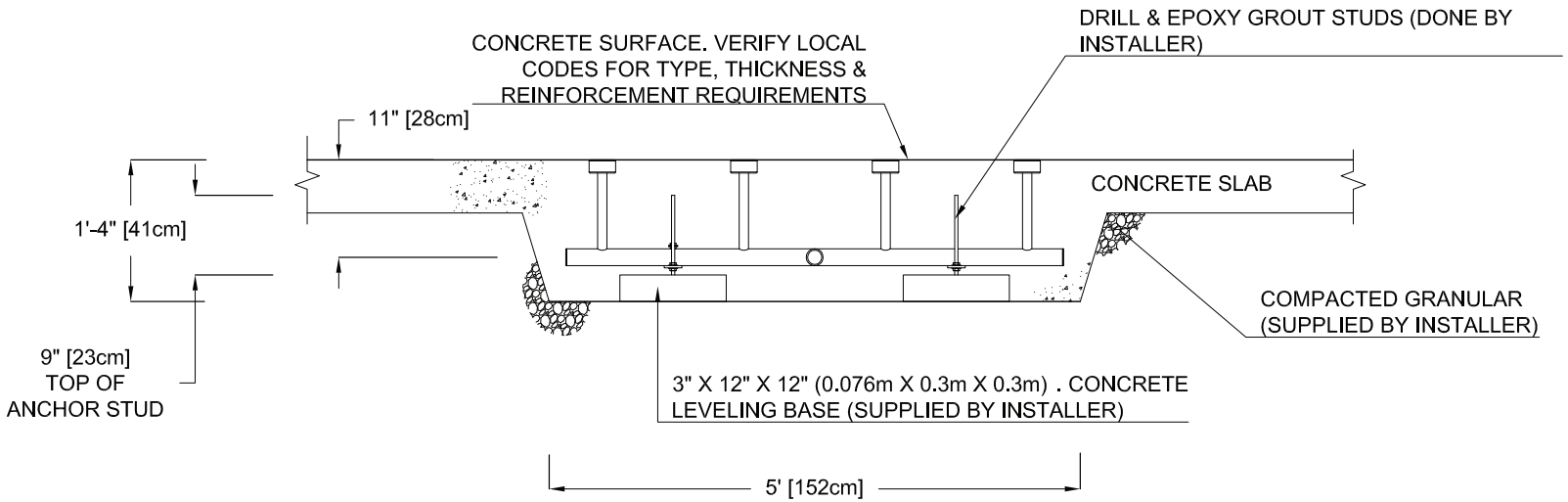

VOR-309.0000 WATER TUNNEL N°2 (Construction Detail)

PRODUCT NAME: WATER TUNNEL N°2	PRODUCT INFORMATION			VORTEX
PRODUCT NUMBER: VOR-309.0000	DATE: 11/03/11	SHEET NO: 1/1	11"x17" SHEET SIZE	

PLAN VIEW

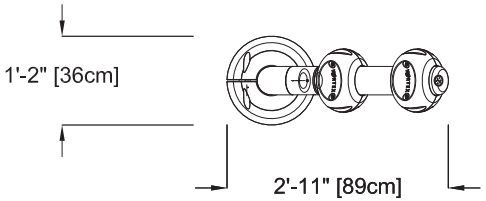

FRONT ELEVATION VIEW

SIDE ELEVATION VIEW

VOR-0535.2XXX ANGLED TWISTER (Construction Detail)

PRODUCT NAME: ANGLED TWISTER	PRODUCT INFORMATION		
PRODUCT NUMBER: VOR-0535.2XXX	DATE: 06/18/09	SHEET NO: 1/1	11"x17" SHEET SIZE

VORTEX

PLAN VIEW

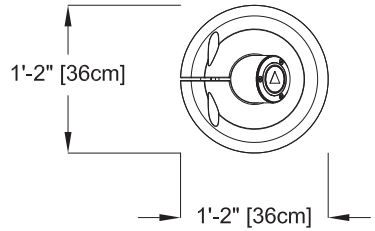

FRONT ELEVATION VIEW

SIDE ELEVATION VIEW

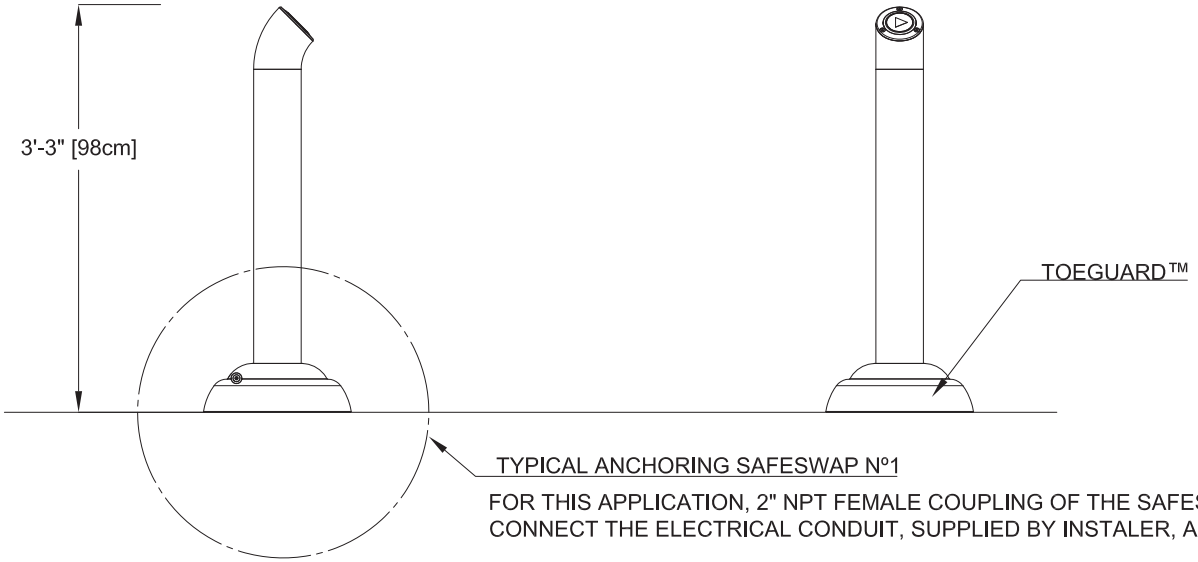

FOR THIS APPLICATION, 2" NPT FEMALE COUPLING OF THE SAFESWAP Nº1 WILL BE USED TO CONNECT THE ELECTRICAL CONDUIT, SUPPLIED BY INSTALER, AND RUN THE ELECTRICAL CABLE.

ELECTRICAL CABLE SPECIFICATION
M12-5PIN CONNECTOR CABLE, 22AWG, MAXIMUM O.D. : 0.25"
(SUPPLIED UP TO 75M WITH ACTIVATOR BY VORTEX)

VOR-0611.2XXX BOLLARD ACTIVATOR Nº3 (Construction Detail)

PRODUCT NAME: BOLLARD ACTIVATOR No 3	PRODUCT INFORMATION			VORTEX
PRODUCT NUMBER: VOR-0611.2XXX	DATE: 12/20/19	SHEET NO: 1/1	11"x17" SHEET SIZE	

PLAN VIEW

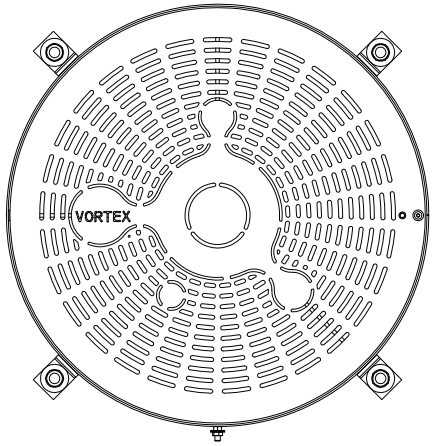

FRONT ELEVATION VIEW

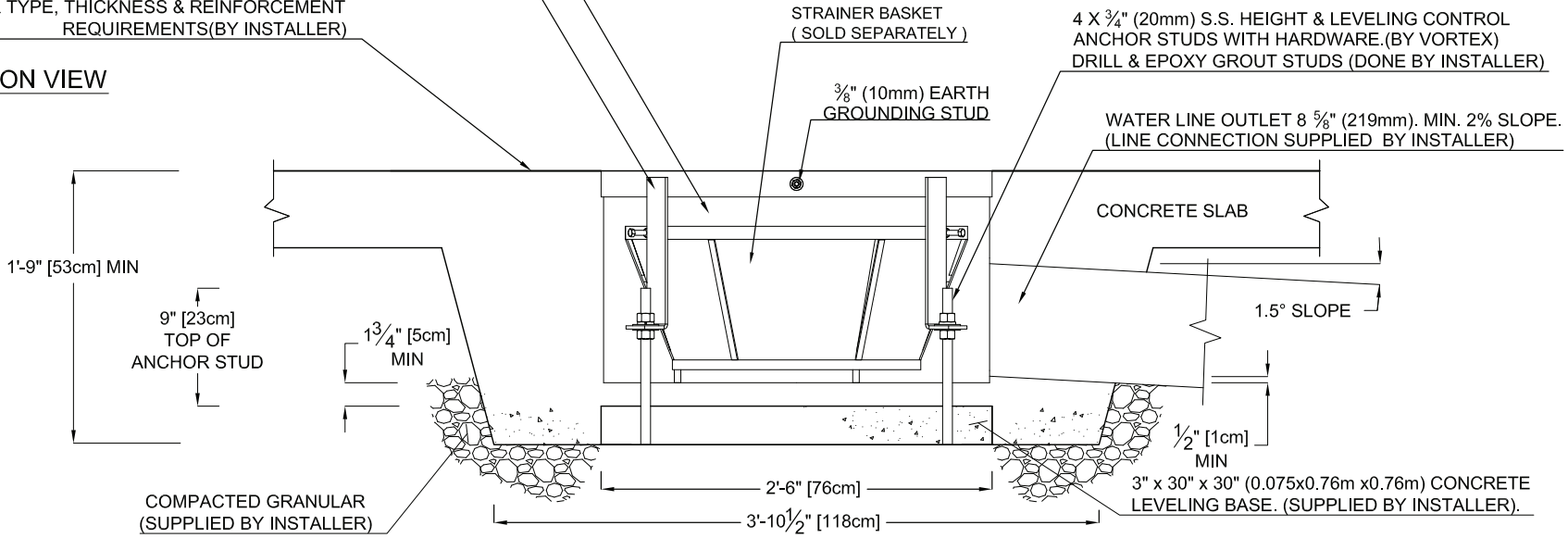

VOR-1001.4000 PLAYSAFE DRAIN, No1 (Construction Detail)

PRODUCT NAME: PLAYSAFE DRAIN, No1	PRODUCT INFORMATION		
PRODUCT NUMBER: VOR-1001.4000	DATE: 07/29/11	SHEET NO: 1/1	11"x17" SHEET SIZE

VORTEX

WATER JOURNEY LABYRINTH

INSTALLATION INSTRUCTIONS

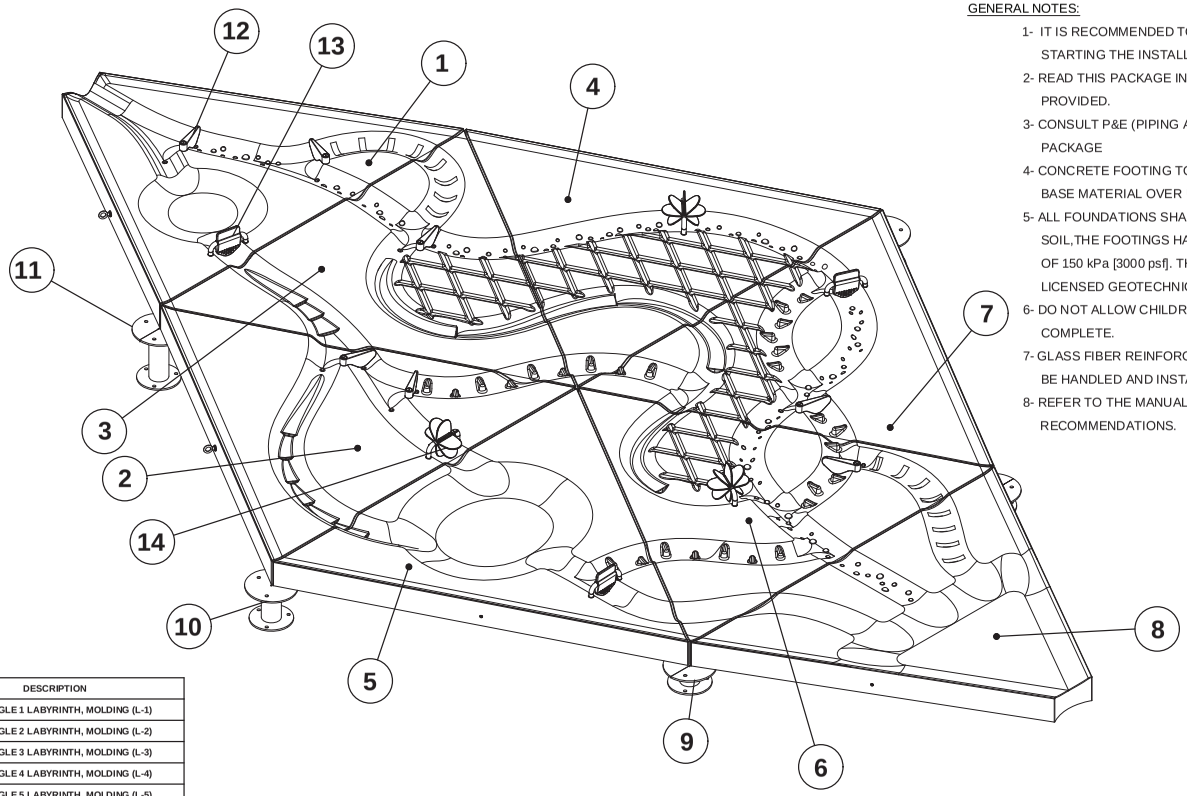

GENERAL NOTES:

1- IT IS RECOMMENDED TO READ ALL INSTRUCTIONS PROVIDED BEFORE STARTING THE INSTALLATION.

2- READ THIS PACKAGE IN CONJUNCTION WITH THE WATER JOURNEY MANUAL PROVIDED.

3- CONSULT P&E (PIPING AND ELECTRICAL) IN CONJUNCTION WITH THIS PACKAGE

4- CONCRETE FOOTING TO BE SET ON 6" MINIMUM OF COMPACTED GRANULAR BASE MATERIAL OVER UNDISTURBED NATIVE SOIL.

5- ALL FOUNDATIONS SHALL BE SET ON NATURAL UNDISTURBED INORGANIC SOIL,THE FOOTINGS HAVE BEEN DESIGNED FOR A SOIL BEARING CAPACITY OF 150 kPa [3000 psf]. THE SOIL BEARING CAPACITY SHALL BE VERIFIED BY A LICENSED GEOTECHNICAL ENGINEER BEFORE FOOTINGS ARE POURED.

6- DO NOT ALLOW CHILDREN IN THE SETUP AREA UNTIL ASSEMBLY IS COMPLETE.

7- GLASS FIBER REINFORCED CONCRETE (GFRC) SLABS ARE FRAGILE AND MUST BE HANDLED AND INSTALLED WITH CARE.

8- REFER TO THE MANUAL FOR REPAIR AND ROUTINE MAINTENANCE RECOMMENDATIONS.

ITEM NO.	QTY.	NUMBER	DESCRIPTION
1	1	33100.4090	TRIANGLE 1 LABYRINTH, MOLDING (L-1)
2	1	33100.4091	TRIANGLE 2 LABYRINTH, MOLDING (L-2)
3	1	33100.4092	TRIANGLE 3 LABYRINTH, MOLDING (L-3)
4	1	33100.4093	TRIANGLE 4 LABYRINTH, MOLDING (L-4)
5	1	33100.4094	TRIANGLE 5 LABYRINTH, MOLDING (L-5)
6	1	33100.4095	TRIANGLE 6 LABYRINTH, MOLDING (L-6)
7	1	33100.4096	TRIANGLE 7 LABYRINTH, MOLDING (L-7)
8	1	33100.4144	TRIANGLE 8 LABYRINTH, MOLDING (L-8)
9	2	33501.3636	GSM - WJ ANCHORING LEVEL 3, WELDING
10	3	33501.3639	GSM - WJ ANCHORING LEVEL 2 (#2), WELDING
11	2	33501.3640	GSM - WJ ANCHORING LEVEL 1, WELDING
12	7	33903.0832	GATE, ASSEMBLY
13	3	33903.0833	STRAINER, ASSEMBLY
14	3	33903.0834	WATERMILL, ASSEMBLY
15	3	11990.2450	STEEL EYEBOLT WITH SHOULDER FOR LIFTING,1/2"-13 THREADED SIZE,1 1/2" LGTH
16	9	11155.008	FLAT WASHER 1/2"
17	1	33903.1036	LABYRINTH - SPARE ITEMS
18	3	22135.3953	WJ ANCHORING TEMPLATE

VORTEX
VORTEX AQUATIC STRUCTURES INTERNATIONAL
328 Avro Street
Pointe Claire (Montreal)
Toll-free:1.877.5VORTEX
www.vortex-intl.com

WATER JOURNEY-LABYRINTH

Project Location / Lieu du projet

Date	Revision Description	No.	By/Par
11/02/2019	UPDATED WATER SOURCE	03	JC
11/10/2017	UPDATED REV.	02	MM
08/02/2016	RELEASE FOR INSTALLATION	01	HK

Drawing Title/Titre du Dessin

WATER JOURNEY-LABYRINTH

Drawn by/Dessine par: HK

Verified by/Verifie par:

Scale/Echelle: N.T.S.

Date: 08/02/2016

Page #: WJ01

Rev.: R02

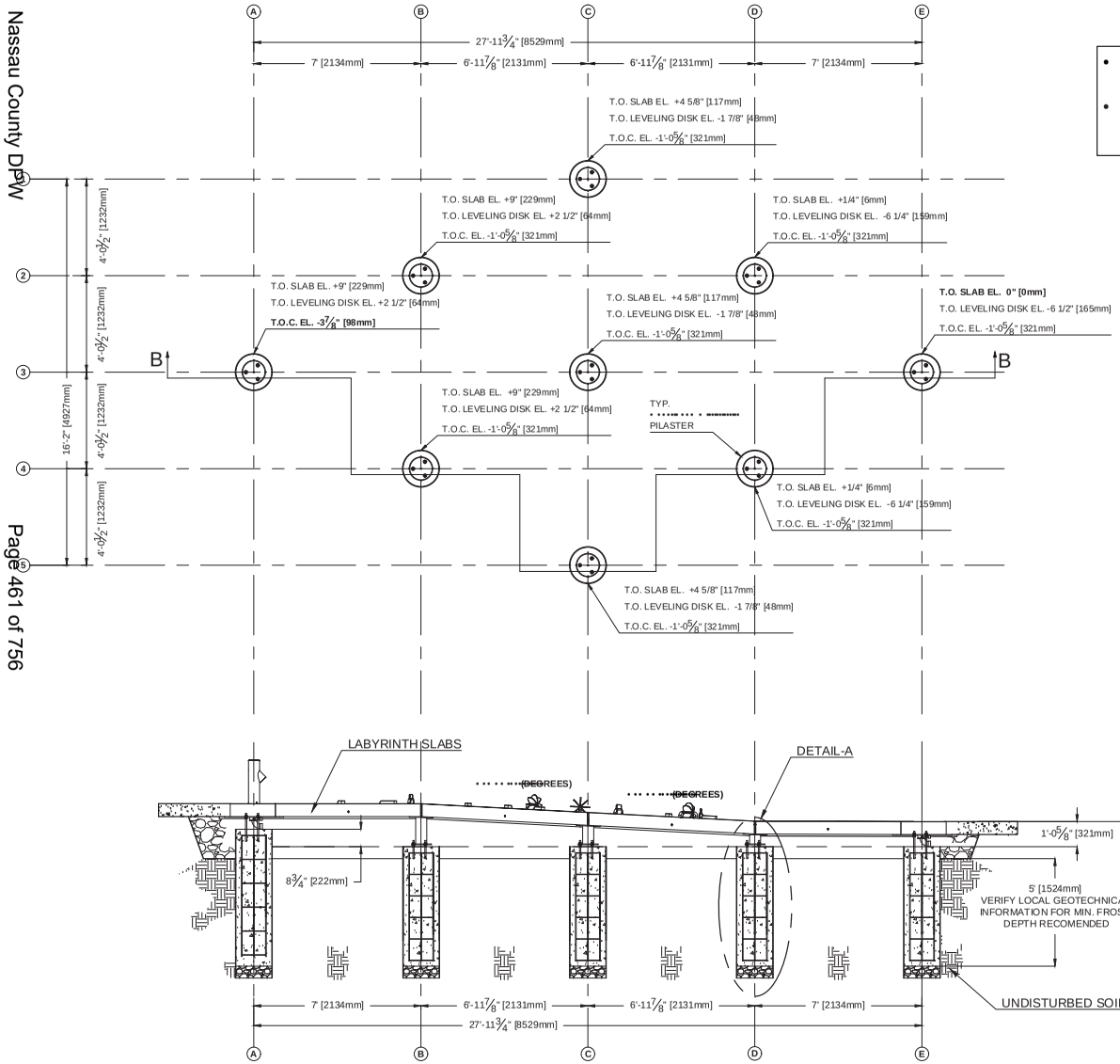

- VERIFY THE HEIGHT OF EACH PILASTER BEFORE POURING CONCRETE. FINAL LEVELING WILL ONLY ALLOW MINIMAL ADJUSTMENT.
- TOP OF LEVELING DISK IS MEASURED AT THE CENTER OF THE TOP PLATE.

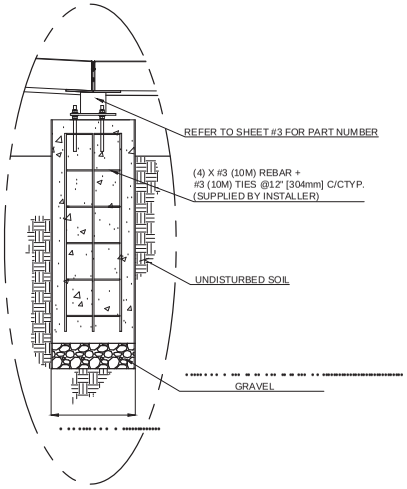

DETAIL-A

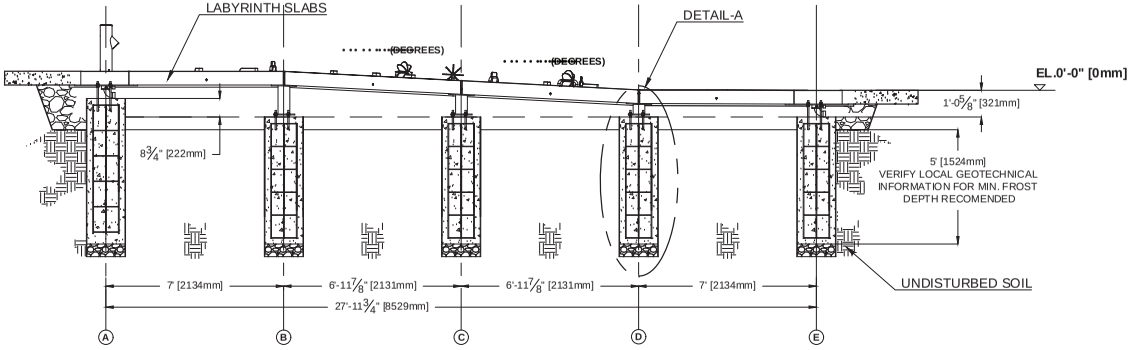

SECTION B-B

VORTEX
VORTEX AQUATIC STRUCTURES INTERNATIONAL
328 Avro Street
Pointe Claire (Montreal)
Toll-free:1.877.5VORTEX
www.vortex-intl.com

WATER JOURNEY-LABYRINTH

Project Location / Lieu du projet

Date	Revision Description	No.	By/Par
11/02/2019	WATER SOURCE UPDATE	03	JC
11/10/2017	UPDATED REV.	02	MM
08/02/2016	RELEASE FOR INSTALLATION	01	HK

Drawing Title/Titre du Dessin

FOUNDATION DETAILS

Drawn by/Dessine par: HK	Verified by/Verifie par:
Scale/Echelle: N.T.S.	Date: 11/02/2019
Page #: WJ02	Rev.: R03

MAKE SURE DRILLING TEMPLATE IS CORRECTLY ALIGNED WITH X-Y AXIS BEFORE DRILLING.

CONNECT THE WATER INLETS, DRAIN LINE, AND ELECTRICAL SYSTEM (IF REQUIRED) FOR THE WATER SOURCE, AND CONNECT THE DRAIN BASIN AND OR FLOW BASIN DRAIN LINES BEFORE INSTALLING SLABS.REFER TO SHEET #4 FOR PUMP AND DRAIN BASIN

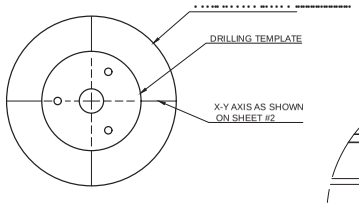

TEMPLATE ALIGNMENT WITH PILASTERS

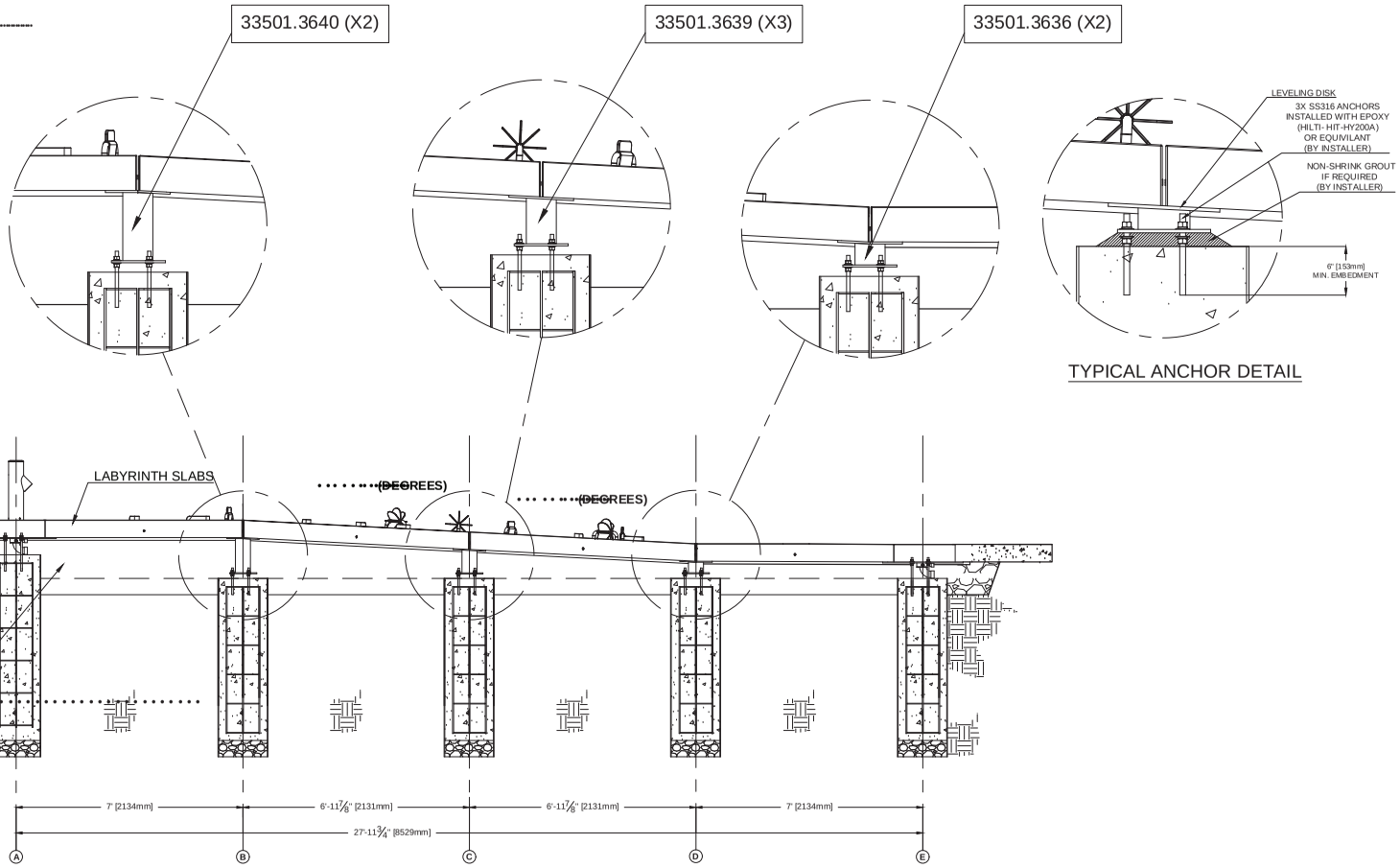

TYPICAL ANCHOR DETAIL

VORTEX

VORTEX AQUATIC STRUCTURES INTERNATIONAL

328 Avro Street
Pointe Claire (Montreal)
Toll-free:1.877.5VORTEX
www.vortex-intl.com

WATER JOURNEY-LABYRINTH

Project Location / Lieu du projet

Date	Revision Description	No.	By/Par
11/02/2019	UPDATED WATER ENTRY	03	JC
11/10/2017	UPDATED REV.	02	MM
08/02/2016	RELEASE FOR INSTALLATION	01	HK

Drawing Title/Titre du Dessin

LEVELING DISKS SUPPORTS

Drawn by/Dessine par: HK	Verified by/Verifie par:
Scale/Echelle: N.T.S.	Date: 11/02/2019
Page #: WJ03	Rev.: R03

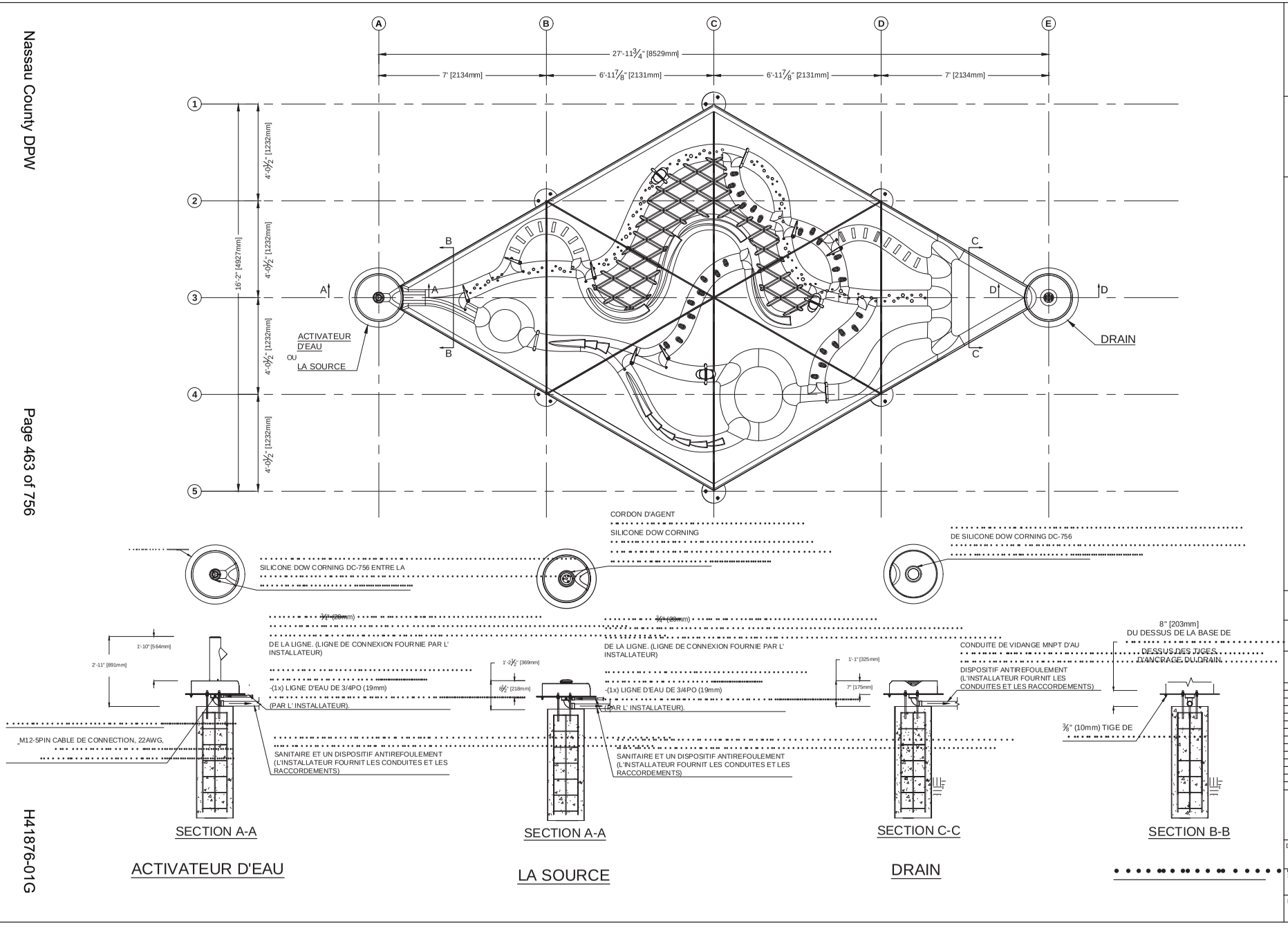

VORTEX
VORTEX AQUATIC STRUCTURES INTERNATIONAL
328 Avro Street
Pointe Claire (Montreal)
Toll-free:1.877.5VORTEX
www.vortex-intl.com

WATER JOURNEY-LABYRINTHE

Project Location / Lieu du projet

Date	Revision Description	No.	By/Par
11/10/2017	Mis-a-jour	02	MM
08/02/2016	Relache pour Installation	01	HK

Drawing Title/Titre du Dessin

INSTALLATION DU DRAIN ET DE LA POMPE

Drawn by/Dessine par: HK

Verified by/Verifie par:

Scale/Echelle:

Date: 08/02/2016

Page #: WJ04

Rev.: R03

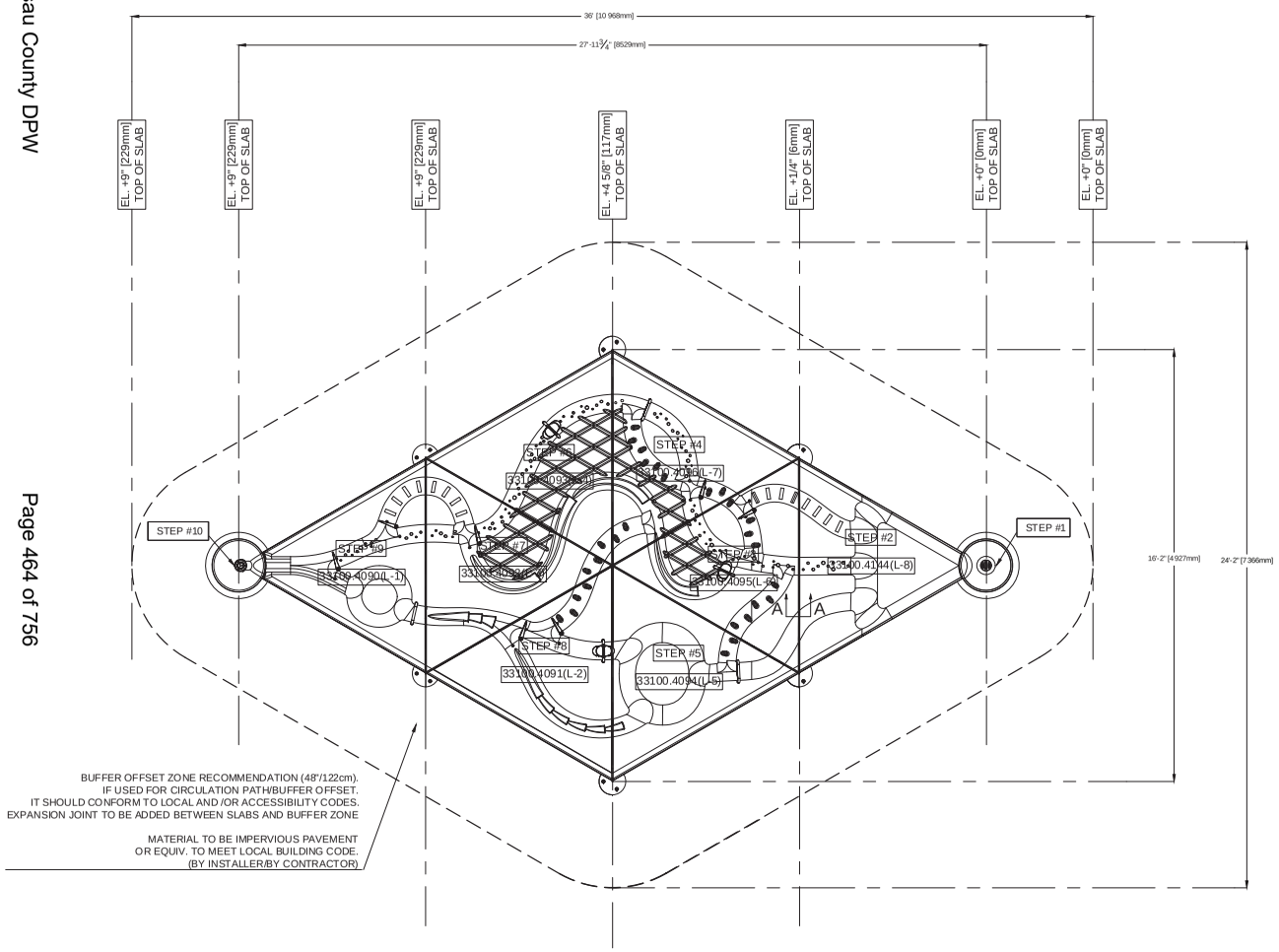

NOTES:

1. UNPACK THE GLASS FIBER REINFORCED CONCRETE SLAB TRIANGLES.

2. POSITION THE DRAIN BASIN, ALL TRIANGULAR SLABS, AND THE HAND PUMP BASIN ON THE LEVELING SUPPORT DISKS AND LEVEL THEM. AFTER INSTALLING EACH SLAB OR BASIN THE LEVEL MUST BE CHECKED. **FOLLOW STEPS 1-10 ON THE DRAWING**.
   A. LAY ALL TRIANGULAR GFRC SLABS DOWN FLAT AND IDENTIFY SLABS CORRECTLY (L-1 TO L-8) AND FIGURE THE RIGHT POSITION.
   B. START WITH THE TRIANGULAR GFRC SLAB THAT TOUCHES THE DRAIN BASIN.
   C. USE THREE (3) EYEBOLTS AND/OR STRAPS TO PLACE THE TRIANGULAR GFRC SLAB IN THE CORRECT POSITION ON TOP OF THE LEVELING DISKS. ENSURE THAT THE TRIANGULAR GFRC SLAB IS AT THE CORRECT HEIGHT. USE THE LEVELING BOLTS TO MAKE ADJUSTMENTS AS NECESSARY. ENSURE THAT THE SLAB IS LEVEL WITH THE EDGE OF THE BASIN. PLACE SHIMS UNDER SLABS TO ADJUST AS NECESSARY.
   D. PLACE THE NEXT ADJACENT TRIANGULAR GFRC SLAB IN THE CORRECT POSITION ON TOP OF THE LEVELING DISKS. LEAVE A (10 MM) GAP BETWEEN SLABS. USE SPACERS WITH DOUBLE SIDED TAPE PROVIDED BY VORTEX TO ACHIEVE THE PROPER GAP. THIS GAP WILL BE FILLED IN LATER
   E. REPEAT STEPS C AND D UNTIL ALL SLABS ARE IN PLACE AND AT THE CORRECT LEVEL, PROVIDING THE REQUIRED SLOPE.

3. PUT FOAM BACKER ROD AND SILICONE DC-756 DOW CORNING SEALANT BETWEEN THE SLABS.

4. PUT SILICONE DC-756 DOW CORNING SEALANT BETWEEN THE DRAIN AND THE CONCRETE DRAIN BASIN. FOLLOW DOW'S RECOMMENDATIONS IN THE MANUAL.

5. ATTACH THE WATER SOURCE AND ALL INTERACTIVE COMPONENTS.

6. FILL IN THE SURROUNDING AREA AND BUILD A CONCRETE BUFFER/ACCESS AREA AROUND THE WATER JOURNEYS MODULES.

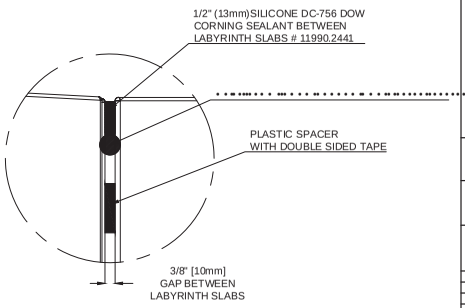

SECTION A-A

VORTEX
VORTEX AQUATIC STRUCTURES INTERNATIONAL
328 Avro Street
Pointe Claire (Montreal)
Toll-free:1.877.5VORTEX
www.vortex-intl.com

WATER JOURNEY-LABYRINTH

Project Location / Lieu du projet

Date	Revision Description	No.	By/Par
11/02/2019	UPDATED WATER SOURCE	03	JC
11/10/2017	UPDATED REV.	02	MM
08/02/2016	RELEASE FOR INSTALLATION	01	HK

Drawing Title/Titre du Dessin

SLABS INSTALLATION

Drawn by/Dessine par: HK	Verified by/Verifie par
Scale/Echelle: N.T.S.	Date: 11/02/2019
Page #: WJ05	Rev.: R03

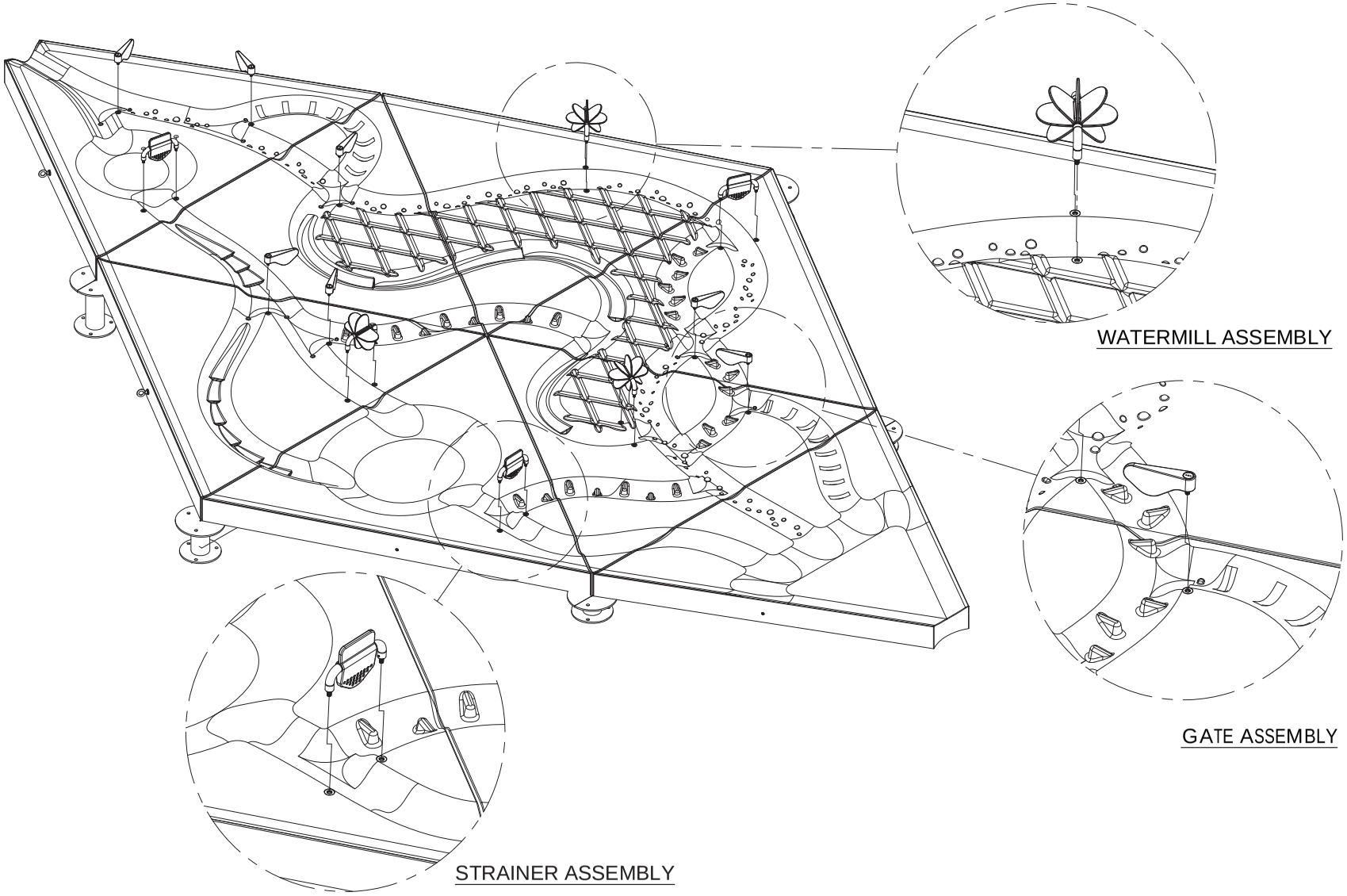

VORTEX
VORTEX AQUATIC STRUCTURES INTERNATIONAL
328 Avro Street
Pointe Claire (Montreal)
Toll-free:1.877.5VORTEX
www.vortex-intl.com

WATER JOURNEY-LABYRINTH

Project Location / Lieu du projet

Date	Revision Description	No.	By/Par
11/02/2019	UPDATED WATER SOURCE	03	JC
11/10/2017	UPDATED REV.	02	MM
08/02/2016	RELEASE FOR INSTALLATION	01	HK

Drawing Title/Titre du Dessin

WATER JOURNEY
FEATURE INSTALLATION

Drawn by/Dessine par: HK	Verified by/Verifie par
Scale/Echelle: N.T.S.	Date: 08/02/2019
Page #: WJ06	Rev.: R03

PLAN VIEW

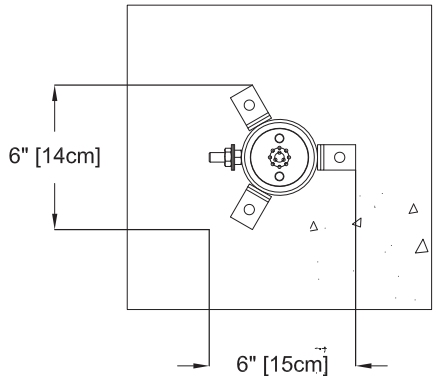

FRONT ELEVATION VIEW

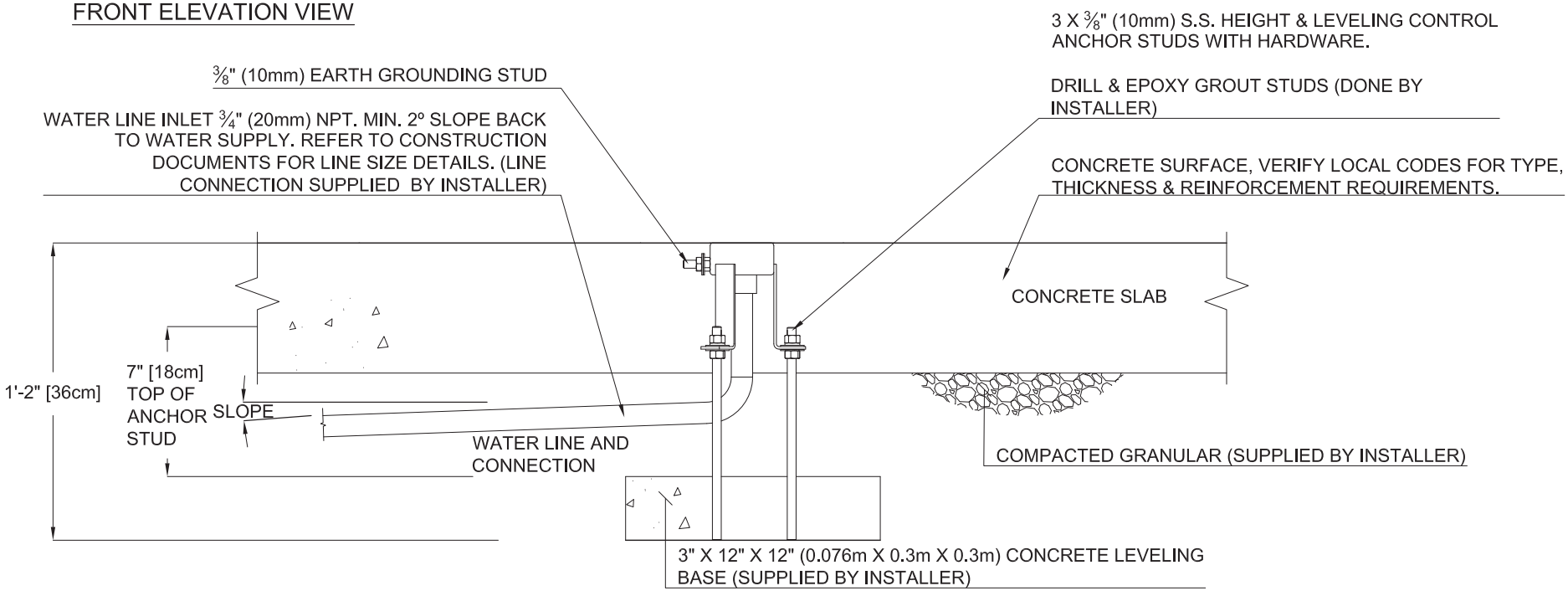

VOR-7513.0XXX FOUNTAIN SPRAY No.1 (Construction Detail)

PRODUCT NAME: FOUNTAIN SPRAY No.1	PRODUCT INFORMATION		
PRODUCT NUMBER: VOR-7513.0XXX	DATE: 08/23/16	SHEET NO: 1/1	11"x17" SHEET SIZE

VORTEX

PLAN VIEW

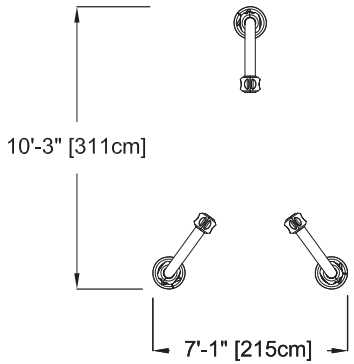

ANCHORING LOCATIONS

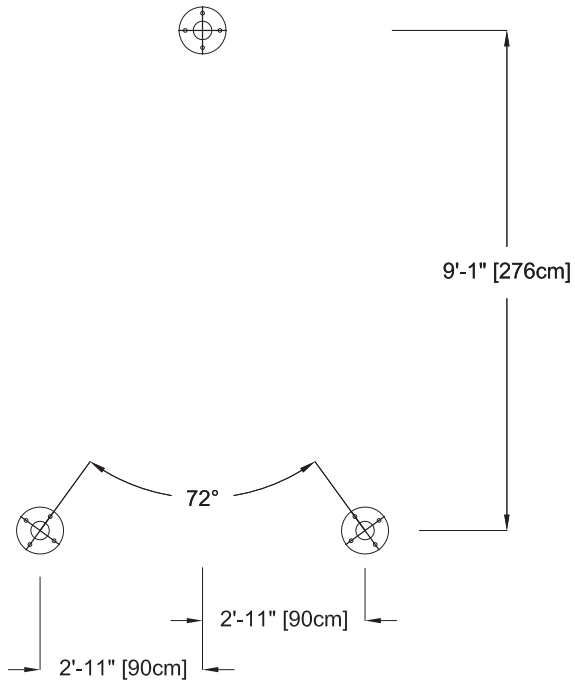

FRONT ELEVATION VIEW

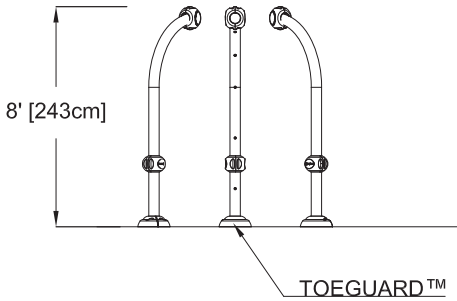

SIDE ELEVATION VIEW

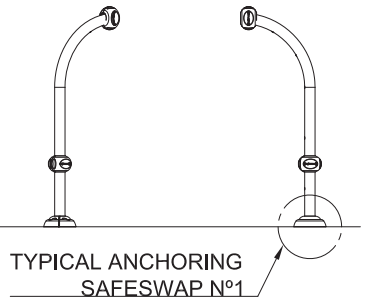

VOR-7565.2XXX HUDDLE SPRAY N°3 (Construction Detail)

PRODUCT NAME: HUDDLE SPRAY N°3	PRODUCT INFORMATION			VORTEX
PRODUCT NUMBER: VOR-7565.2XXX	DATE: 06/17/09	SHEET NO: 1/1	11"x17" SHEET SIZE	

THESE DRAWINGS PROVIDE A GENERIC OVERVIEW OF THE INSTALLATION. THEY ARE NOT PROJECT SPECIFIC OR REFLECT ANYCUSTOMIZATION UNLESS NOTED. PLEASE CONTACT VORTEX AQUATIC STRUCTURES INTERNATIONAL FOR MORE DETAILS.

Nassau County DPW
Page 48 of 176
H418/010

PLAN VIEW

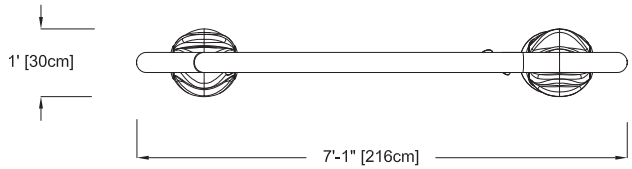

ANCHORING LOCATIONS

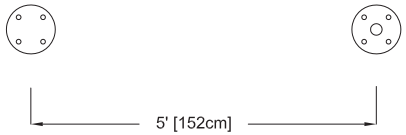

FRONT ELEVATION VIEW

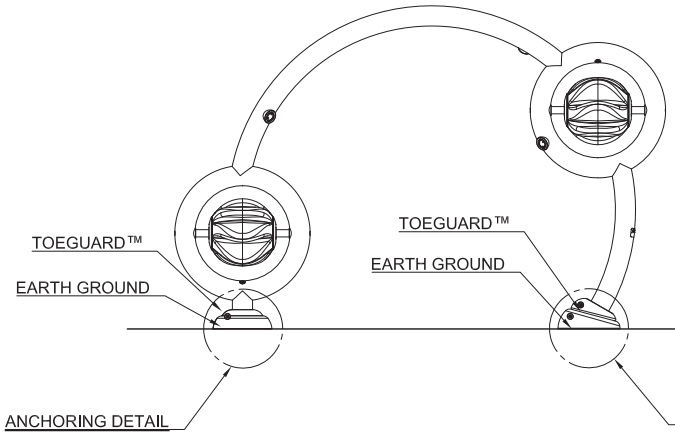

SIDE ELEVATION VIEW

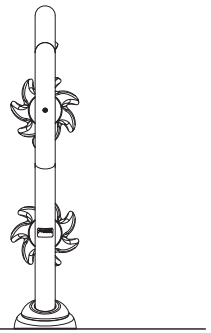

PRODUCT NAME: LUNA No.1			
PRODUCT NUMBER: 7230.2XXXX	DATE: 10/04/2017	SHEET NO: 1/2	11"x17" SHEET SIZE

VORTEX

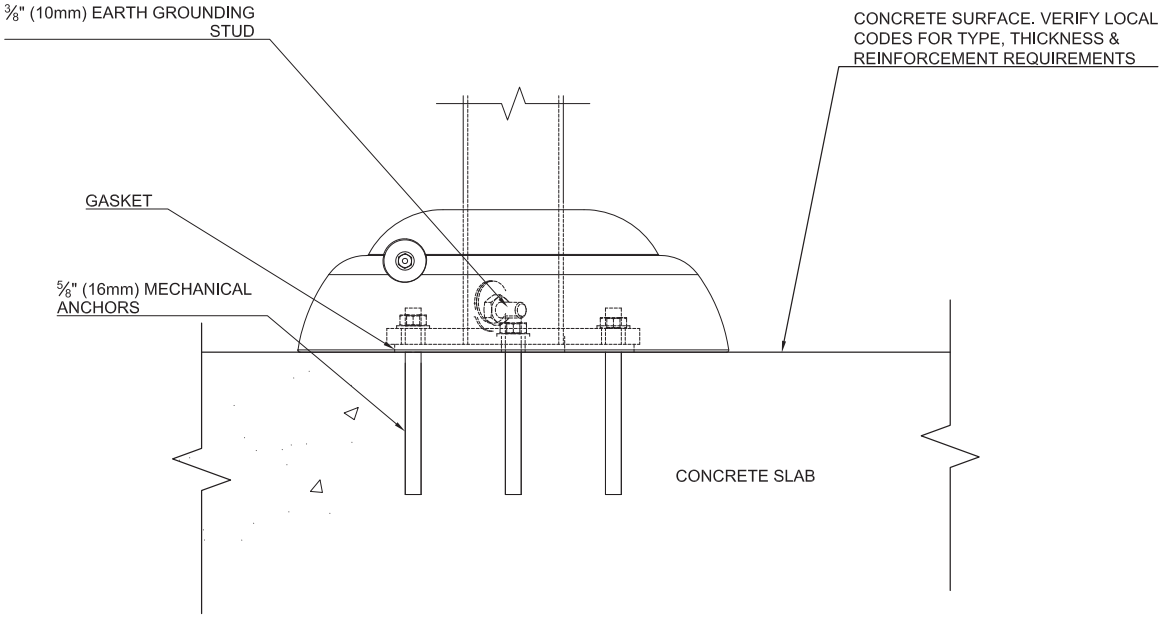

VOR-7230.2XXX LUNA No.1 (Construction Detail)

ANCHORING DETAIL

THESE DRAWINGS PROVIDE A GENERIC OVERVIEW OF THE INSTALLATION. THEY ARE NOT PROJECT SPECIFIC OR REFLECT ANY CUSTOMIZATION UNLESS NOTED. PLEASE CONTACT VORTEX AQUATIC STRUCTURES INTERNATIONAL FOR MORE DETAILS.

PRODUCT NAME:	LUNA No.1			
PRODUCT NUMBER:	7230.2XXX	DATE: 10/04/2017	SHEET NO: 2/2	11"x17" SHEET SIZE

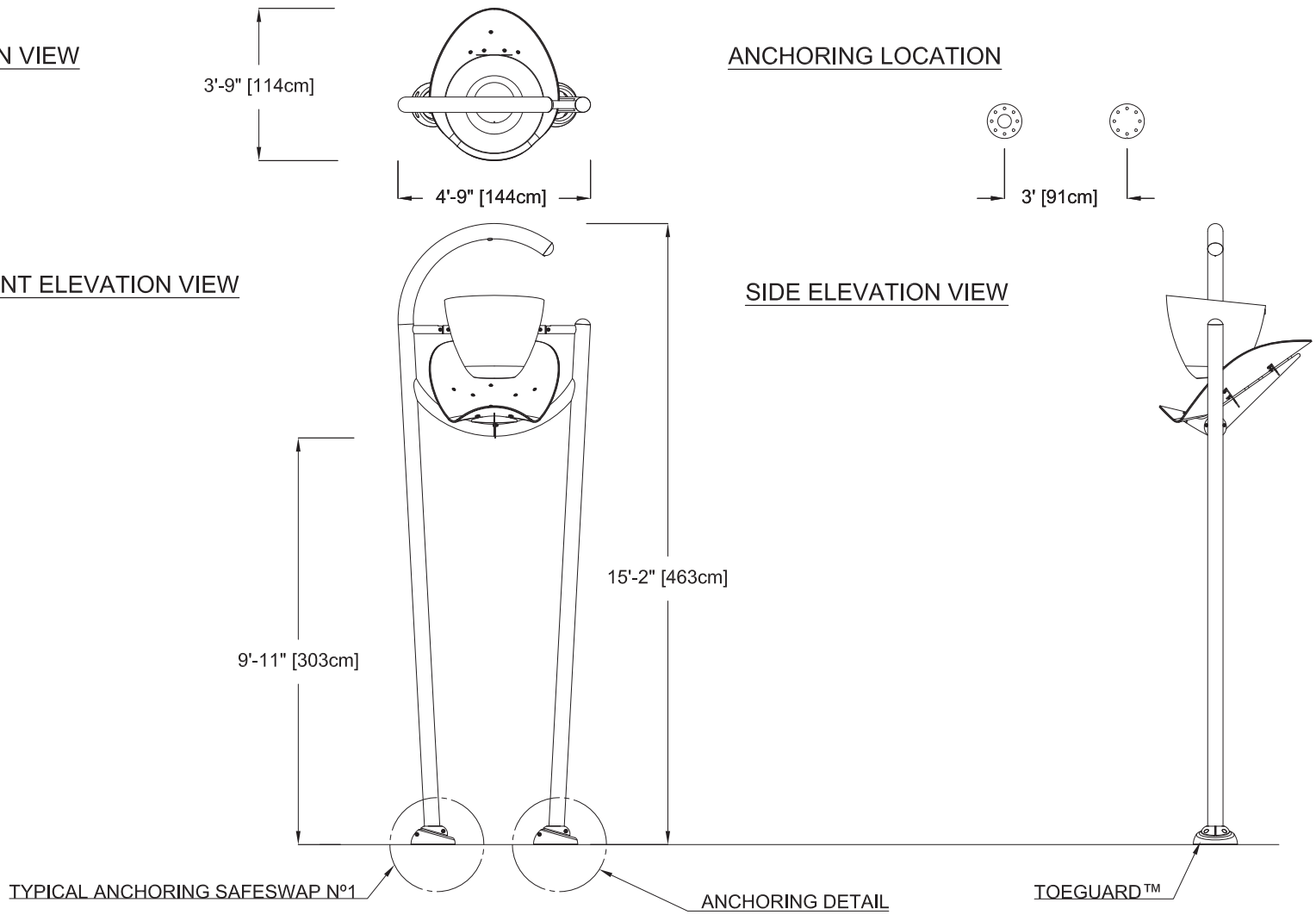

VOR-7242.2XXX TWINSPLASH (Construction Detail)

PRODUCT NAME: **TWINSPLASH**	PRODUCT INFORMATION			VORTEX
PRODUCT NUMBER: VOR-7242.2XXX	DATE: 09/04/19	SHEET NO: 1/2	11"x17" SHEET SIZE	

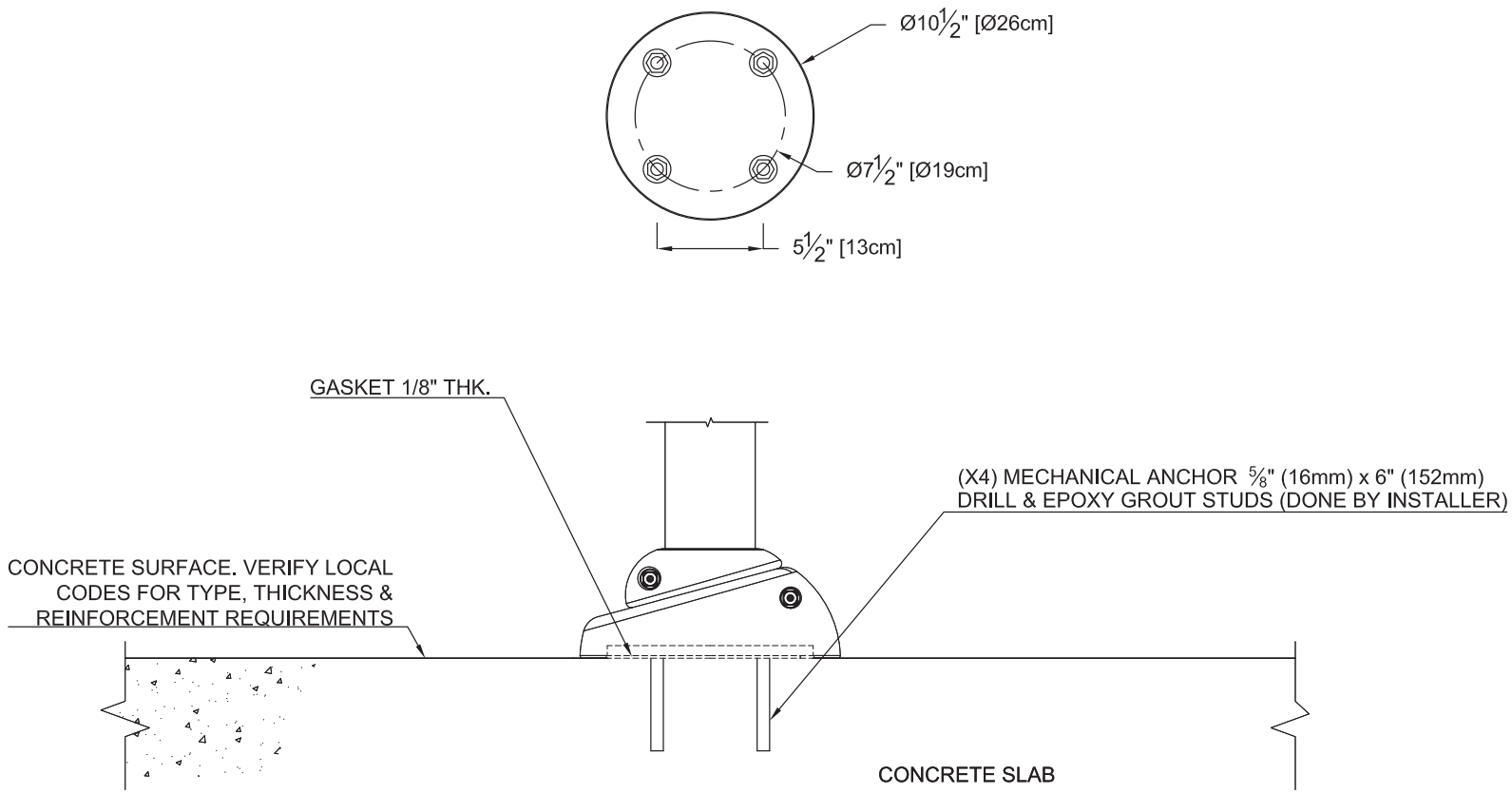

VOR-7242.2XXX TWINSPLASH (ANCHORING DETAIL) (Construction Detail)

PRODUCT NAME: TWINSPLASH (ANCHORING DETAIL)	PRODUCT INFORMATION		
PRODUCT NUMBER: VOR-7242.2XXX	DATE: 09/04/19	SHEET NO: 2/2	11"x17" SHEET SIZE

VORTEX

PLAN VIEW

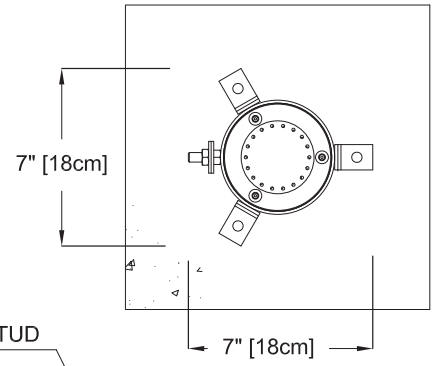

FRONT ELEVATION VIEW

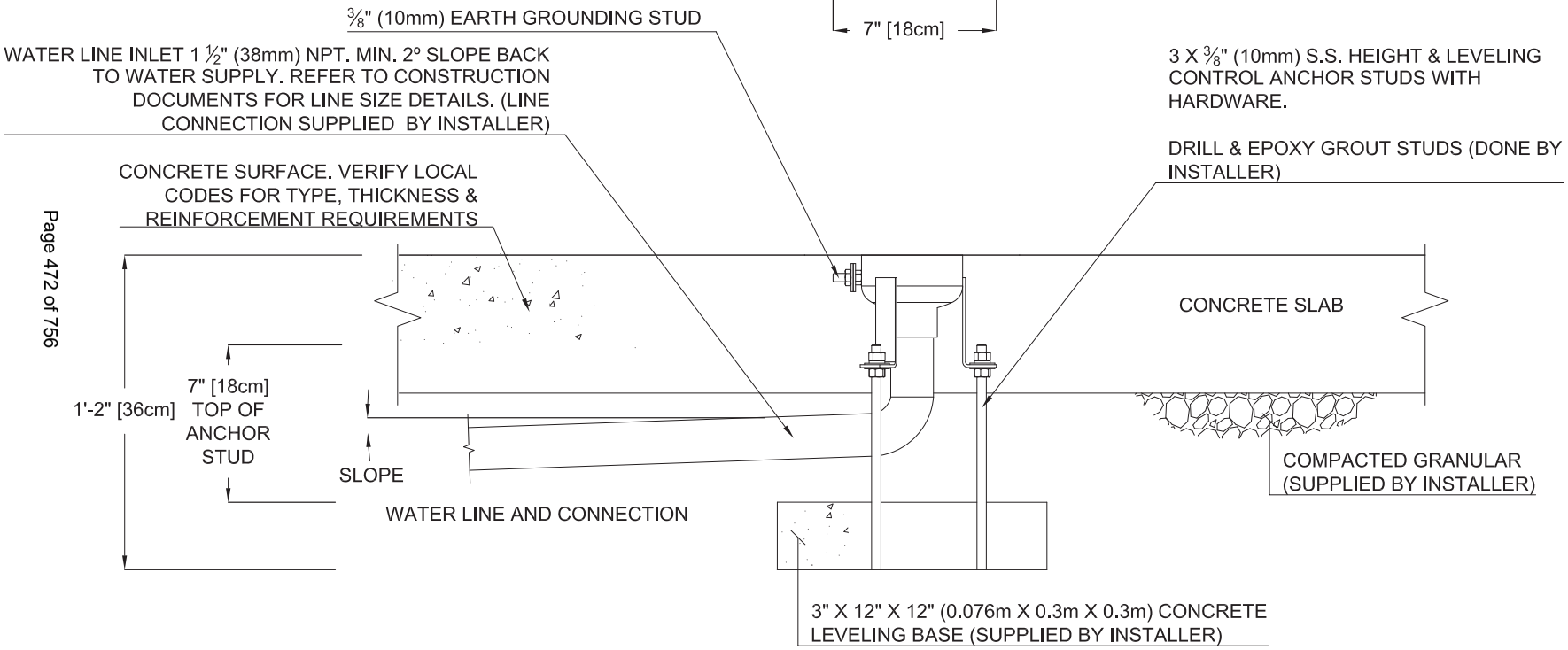

VOR-7518.0XXX SIDE WINDER (Construction Detail)

PRODUCT NAME: SIDE WINDER	PRODUCT INFORMATION			VORTEX
PRODUCT NUMBER: VOR-7518.0XXX	DATE: 10/19/10	SHEET NO: 1/1	11"x17" SHEET SIZE	

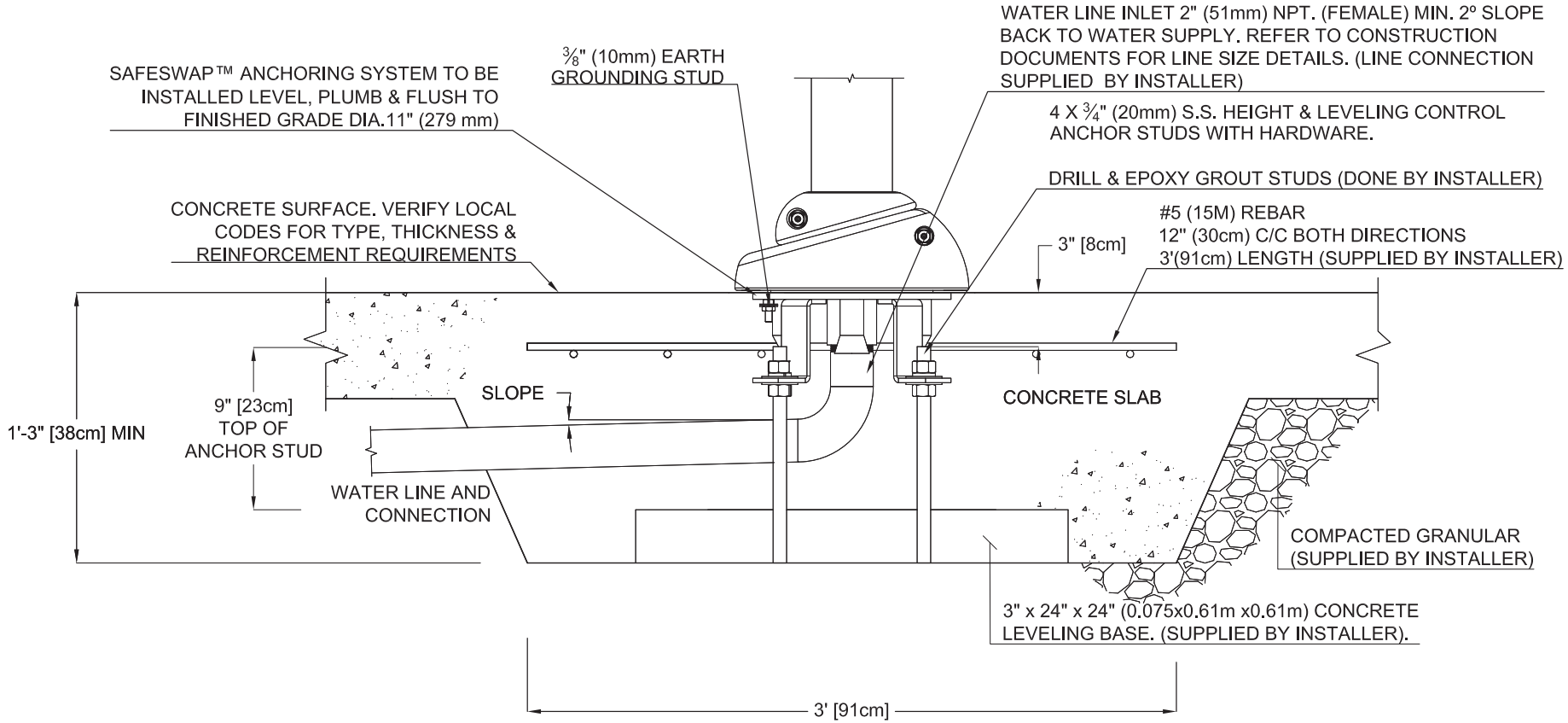

SAFESWAP N° 1 (Construction Detail)
LARGE

PRODUCT NAME: SAFESWAP Nº1	PRODUCT INFORMATION		
PRODUCT NUMBER: 55000.0430	DATE: 04/06/12	SHEET NO: 1/1	11"x17" SHEET SIZE

VORTEX

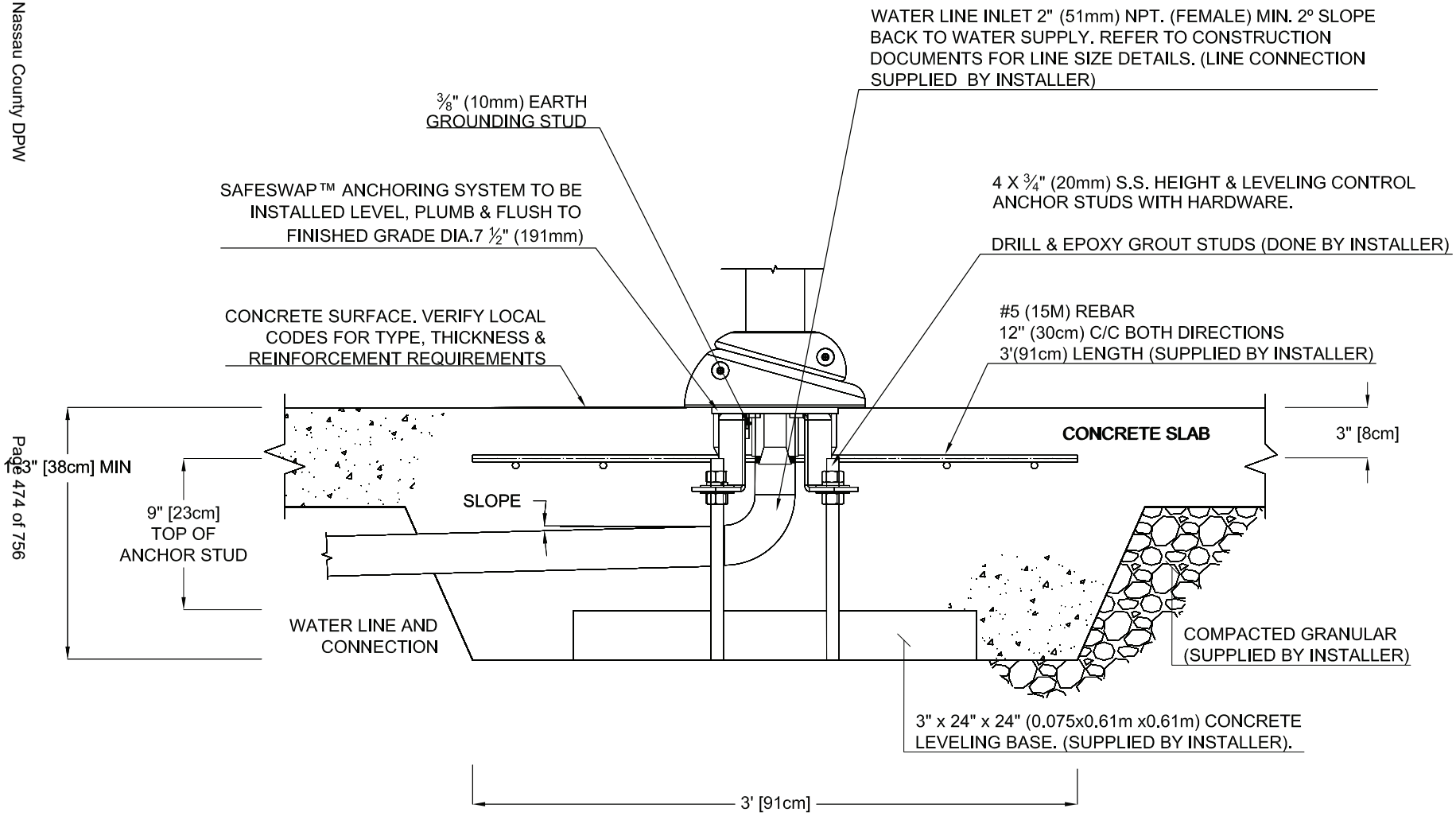

VOR-55000-0570 SAFESWAP Nº2 MEDIUM (Construction Detail)

PRODUCT NAME: SAFESWAP Nº2 MEDIUM	PRODUCT INFORMATION			VORTEX
PRODUCT NUMBER: VOR-55000-0570	DATE: 05/12/11	SHEET NO: 1/1	11"x17" SHEET SIZE	

ITEM 527-S – EXERCISE EQUIPMENT

1. GENERAL:

Under this Item, the Contractor shall furnish all labor, tools, materials and equipment necessary furnish and install exercise equipment as shown on the Plans or directed by the Engineer.

2. MATERIALS:

A. Furnish and install Exercise Equipment as manufactured by Greenfield Outdoor Fitness

B. and/or approved equal.

C. Sales Representative: PlaySafe Playground Systems of New York, Sal Romanello; Phone: (516) 677-9240, Email: playgroundman@msn.com; Website: www.playsafeNY

D. Exercise Equipment:

1. Adjustable Stepper UBX-292
2. Rowing Machine SGR2005-1-91
3. Single Elliptical SHP2009-5-03
4. Adjustable Chest Press UBX-246

A. Submittals:

1. Product literature
2. Shop drawings
3. Installation Details
4. Proprietary information
5. Samples – submit manufacturer's color sample, standard or custom
6. Warranty – submit manufacturer's standard warranty
7. Maintenance and User Instructions

3. CONSTRUCTION DETAILS:

A. Furnish and install exercise equipment where shown and according to Plans and Details and as per manufacturer's written instructions.

B. The installation shall be in accordance with the manufacturer's recommendations.

4. METHOD OF MEASUREMENT

The total quantity to be paid under this Item shall be a lump sum amount to furnish and install exercise equipment in accordance with the Plans, Specifications and/or the direction of the Engineer.

5. BASIS OF PAYMENT

The lump sum bid price shall include, but not be limited to all necessary labor, material, and incidentals necessary to complete the work, including, but not limited to, concrete foundations or slabs, all excavation and backfilling, and shop drawings, all in accordance with the plans, the specifications and the directions of the Engineer.

END OF SECTION

Greenfields Outdoor Fitness

Promoting Wellness & Fighting Obesity One Community at a Time.™

ADJUSTABLE STEPPER

zero recoil for enhanced safety

bidirectional resistance

UBX-292

Equipped with SafeStop

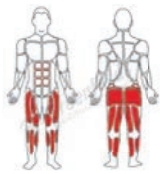

Target muscles

Secondary muscles

Strengthens:

- Glutes
- Legs

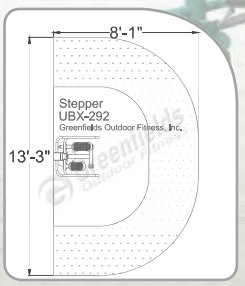

The Greenfields Advantage - this unit incorporates SafeStop technology for a workout that's smooth and hazard-free

VIEW THE VIDEO

http://gfoutdoorfitness.com/adjustable-stepper-video/

Greenfields' units are designed to accommodate the majority of users age 14 and above; however, due to the nature of outdoor fitness equipment, units are "one size fits most".
In order to honor our commitment to quality and safety, Greenfields Outdoor Fitness reserves the right to make changes and revise the design specifications without notice.

Greenfields Outdoor Fitness

Promoting Wellness & Fighting Obesity One Community at a Time.™

ROWING MACHINE

SGR2005-1-91

Equipped with SafeStop

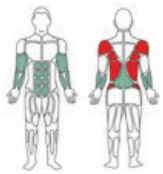

Target muscles
Secondary muscles

- Strengthens back muscles, shoulders, arm muscles and abdominals
- Improves cardiovascular endurance

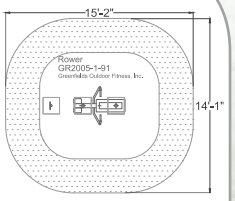

VIEW THE VIDEO

greenfieldsfitness.com/rowing-machine-video.html

Greenfields' units are designed to accommodate the majority of users age 14 and above; however, due to the nature of outdoor fitness equipment, units are "one size fits most".
In order to honor our commitment to quality and safety, Greenfields Outdoor Fitness reserves the right to make changes and revise the design specifications without notice.

Greenfields Outdoor Fitness

Promoting Wellness & Fighting Obesity One Community at a Time.™

SINGLE ELLIPTICAL

SHP2009-5-03

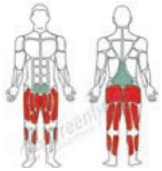

Target muscles

Secondary muscles

- Strengthens leg muscles
- Improves cardiovascular endurance

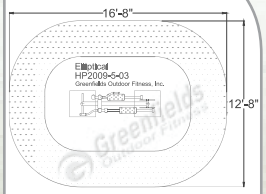

VIEW THE VIDEO

greenfieldsfitness.com/elliptical-cross-trainer-video.html

Greenfields' units are designed to accommodate the majority of users age 14 and above; however, due to the nature of outdoor fitness equipment, units are "one size fits most".
In order to honor our commitment to quality and safety, Greenfields Outdoor Fitness reserves the right to make changes and revise the design specifications without notice.

Greenfields Outdoor Fitness

Promoting Wellness & Fighting Obesity One Community at a Time.™

ADJUSTABLE CHEST PRESS

zero recoil for enhanced safety

bidirectional resistance

UBX-246

Equipped with SafeStop

Target muscles

Secondary muscles

Strengthens:

- Chest
- Back
- Arms (triceps, forearms)
- Shoulders
- Abs

The Greenfields Advantage - this unit incorporates SafeStop technology for a workout that's smooth and hazard-free

VIEW THE VIDEO

http://gfoutdoorfitness.com/adjustable-chest-press-video/

Greenfields' units are designed to accommodate the majority of users age 14 and above; however, due to the nature of outdoor fitness equipment, units are "one size fits most".
In order to honor our commitment to quality and safety, Greenfields Outdoor Fitness reserves the right to make changes and revise the design specifications without notice.

ITEM 528-S – PARK ENTRANCE GATEWAY

1. DESCRIPTION:

Under this Item, the Contractor shall furnish all labor, tools, materials and equipment necessary to install a PARK ENTRANCE GATEWAY structure to the park as shown on the Plans and Details, and/or directed by the Engineer.

2. SUBMITTALS:

a. Contractor shall furnish detailed shop drawings for the Park Entrance Gateway, including front and side sections/elevations, layout of support columns, and foundation details – stamped and signed by a professional structural engineer licensed in the state of New York.
b. Contractor shall submit maintenance procedures if applicable.
c. Color and material samples of all components of Park Entrance Gateway to be submitted to the Engineer for approval.

3. MATERIALS:

a. The Contractor shall furnish and install custom designed Park Entrance Gateway, as detailed in the Construction Documents.
   A. Frame material: HHS (steel),.
   B. Custom laser cut banner “Centennial Park”.
   C. Ecoat/Powder coat finish.
   D. Color to be determined
   E. Foundation: Drill pier (30” diameter by 6’ deep min, or as approved by Structural Engineer)
   F. Anchoring: Base plate & anchor bolts

b. Acceptable Manufacturers: ICON Shelter System Inc.;

c. Contact: Rob Salzberg, SiteSpecialists, Ltd., 265 Post Ave, Suite 365, Westbury, NY 11590; Tel: (516)-338-1630; email: Rob@sitespecialists.net

d. Or approved equal.

4. CONSTRUCTION DETAILS:

a. Install Park Entrance Gateway where shown on Drawings and according to approved Shop Drawings.

b. Place foundations in intervals as specified on Drawings and approved Shop Drawings.

c. All work to be coordinated with installation of 6' Ht. Steel Fence – Item 506-S-6 and 6' Ht Steel Double Gate - Item 506-S-6-DG.

5. METHOD OF MEASUREMENT

The total quantity to be paid under this Item shall be the supply and installation of each Park Entrance Gateway.

6. BASIS OF PAYMENT

The unit bid price shall include, but not be limited to all necessary labor, insurance, shipping, material, and incidentals necessary to complete the work, including, but not limited to, fabrication and installation of Park Entrance Gateway, concrete foundations, all excavation and backfilling, and shop drawings, stamped by a Structural Engineer, all in accordance with the plans, the specifications and the directions of the Engineer.

END OF SECTION

ITEM 531-S – MAINTENANCE SHED

1. DESCRIPTION:
Under this Item, the Contractor shall furnish all labor, tools, materials and equipment necessary to supply and install a Maintenance Shed as shown on plans or directed by the Engineer.

2. SUBMITTALS:
Submit two copies of manufacturer's shop drawings, installation instructions and maintenance procedures. Structural components shall be approved by a licensed engineer.

3. MATERIALS:

a. Maintenance Shed: as manufactured by Lancaster County Barns, 2392 Horseshoe Road Lancaster, PA 17601; Phone: (717) 556-0394, Email: orders@lancasterbarns.com, website: www.lancasterbarns.com

b. or approved equal.

1. A frame garage 10' wide on gable end by 14' long on eve side
2. 7' high walls
3. 5/12 Roof Pitch
4. Shingle Color: Burnt Siena
5. Metal Trim color: Beige
6. Metal siding on top of 2x4 framing (ribbed metal -ABM panel) 3 1/2" overhangs
7. Metal roofing (ribbed metal -ABM panel) on top of 2x4 rafters
8. 2x4 framing 16" OC walls and ceiling
9. 12" OC floor joists
10. 6' double door, pre-hung; located on 14' side--Steel door
11. No windows
12. 2 gable end vents

c. Concrete slab to be installed under Item 28.
d. Aggregate base course to be installed under Item 121.
e. The Contractor shall furnish and install aluminum gutters and downspouts as manufactured by Englert, Inc., 45 Dixon Avenue, Amityville, NY 11701; Phone: (631) 491-7700, Fax: (631) 491-7705 or approved equal.
1. Gutters: Shall be continuous and seamless sheet aluminum in roll form, 0.027" thick.
2. Downspouts: 3" by 4" in size and 0.019" thick
3. Color: Lo Gloss White
4. Gutters and Downspouts shall be aluminum sheet, ASTM B 209, Alloy 3105-H24. Minimum tensile strength 26,000 psi, minimum yield strength 25,000 psi or equivalent.

4. CONSTRUCTION DETAILS:
a. Building shall be installed on a concrete pad as shown on the plans.
b. The construction shall comply with the requirements of any and all applicable State, County, and Local Building Codes or Regulations including but not limited to:
1. International Building Code (IBC) 2006, International Residential Code (IRC) 2006 and/or as amended or adopted by the local municipality authority the 2005 National Electrical Code.
c. Gutters and Downspouts:

1. All accessories required to install the gutters and downspouts including, but not limited to, elbows, end caps and hangers shall be approved by the County and/or Engineer.
2. Connect to positive drainage system as shown on Grading & Drainage Plans. Paid under item 13DS.

d. The installation shall be in accordance with the manufacturer's recommendations.

5. MEASUREMENT AND PAYMENT:

The total quantity to be paid under this Item shall be the supply and installation of the prefabricated shed as well as the supply and installation of gutters and downspouts. The unit price bid shall include, but not be limited to all necessary labor, materials, tools, supplies, equipment and incidentals necessary to complete the work. Concrete slab, aggregate base, and electrical work to be paid under their respective contract items.

END OF SECTION

ITEM 532-S – SITE DUMPSTER

1. DESCRIPTION:

Under this item, the contractor shall furnish, deliver and place SITE DUMPSTER at location as shown on the drawings and/or as directed by the Engineer.

2. MATERIALS:

   A. Front Load Dumpster, 10 yards

   B. Acceptable Manufacturers: Nassau County Dumpster
      Massapequa, NY 11758
      Tel: (516) 340-0722

   C. Or approved equal

   D. Color: Green RAL 6009 or as determined by the County.

   E. Submittals:
      1. Product literature
      2. Shop drawings
      3. Made in the USA Statement
      4. Proprietary information
      5. Samples – submit manufacturer's color sample, standard or custom
      6. Warranty – submit manufacturer's standard warranty

3. EXECUTION:
   The installation shall be as per manufacturer's instructions, and as shown on the Plans, Specifications and/or as ordered by the Engineer.

4. METHOD OF MEASUREMENT:
   The quantity to be paid for under this item will be per DUMPSTER (EACH) measured in place and accepted in accordance with the specifications and drawings.

5. BASIS OF PAYMENT:
   The unit price bid per each DUMPSTER shall include the cost of furnishing all labor, materials, and tools, equipment and incidentals necessary to install this item.

END OF SECTION

ITEM 534-S – RAILING ON STAIRS

1. DESCRIPTION:

Under this item, the Contractor shall furnish and erect pipe rail fences of the type and size shown on the plans or as directed by the Engineer, in accordance with the plans and specifications.

2. PRODUCTS

A. All posts and rails shall be aluminum pipe of the type and size shown on the plans. All material as delivered shall be in condition for erection without field fitting or cutting.

B. Brackets, Flanges, and Anchors: Cast or formed metal of same type of material and finish as supported rails unless otherwise indicated.

C. Provide alloy and temper recommended by aluminum producer and finisher for type of use and finish indicated, and with not less than the strength and durability properties of alloy and temper designated below for each aluminum form required.

D. Extruded Structural Pipe ASTM B 429/B 429M, Alloy 6063-T6.

E. Delegated Design: Design railings, including comprehensive engineering analysis by a qualified professional engineer, using performance requirements and design criteria indicated.

F. Structural Performance: Railings shall withstand the effects of gravity loads and the following loads and stresses within limits and under conditions indicated: Uniform load of 50 lbf/ ft. applied in any direction, concentrated load of 200 lbf applied in any direction and in form and concentrated loads need not be assumed to act concurrently.

G. Control of Corrosion: Prevent galvanic action and other forms of corrosion by insulating metals and other materials from direct contact with incompatible materials.

H. Fasteners: Type 304 stainless-steel fasteners.

I. Welding Rods and Bare Electrodes: Select according to AWS specifications for metal alloy welded. Universal Shop Primer: Fast-curing, lead- and chromate-free, universal modified-alkyd primer complying with MPI#79 and compatible with topcoat.

J. Bituminous Paint: Cold-applied asphalt emulsion complying with ASTM D 1187.

K. Nonshrink, Nonmetallic Grout: Factory-packaged, nonstaining, noncorrosive, nongaseous grout complying with ASTM C 1107. Provide grout specifically recommended by manufacturer for interior and exterior applications.

L. Submittals:
   1. Shop drawings of layout of railing and post locations.

2. Manufacturer's cut sheets
3. Material finishes and color options.

3. CONSTRUCTION DETAILS

A. Cut, drill, and punch metals cleanly and accurately. Remove burrs and ease edges to a radius of approximately 1/32 inch unless otherwise indicated. Remove sharp or rough areas on exposed surfaces.
B. Form work true to line and level with accurate angles and surfaces. Fabricate railings to interconnect members with concealed internal welds that eliminate surface grinding, using manufacturer's standard system of sleeve and socket fittings. Bend members in jigs to produce uniform curvature without buckling or otherwise deforming exposed surfaces.

C. Clear Anodic Finish: AAMA 611, AA-M12C22A41, Class I, 0.018 mm or thicker.

D. Set railings accurately in location, alignment, and elevation; measured from established lines and levels and free of rack. Do not weld, cut, or abrade surfaces of railing components that have been coated or finished after fabrication and that are intended for field connection by mechanical or other means without further cutting or fitting. Set posts plumb within a tolerance of 1/16 inch in 3 feet

E. Align rails so variations from level for horizontal members and variations from parallel with rake of steps and ramps for sloping members do not exceed 1/4 inch in 12 feet. Coat concealed surfaces of aluminum that will be in contact with grout, concrete, masonry, wood, or dissimilar metals, with a heavy coat of bituminous paint. Anchor posts through surface mount.

F. Immediately after erection, clean field welds, bolted connections, and abraded areas of shop paint, and paint exposed areas with the same material as used for shop painting to comply with SSPC-PA 1 for touching up shop-painted surfaces. Galvanized Surfaces: Clean field welds, bolted connections, and abraded areas and repair galvanizing to comply with ASTM A 780.

4. METHOD OF MEASUREMENT:

The quantity of pipe railing of type to be paid for under this item shall be the number of feet of railing measured along the top rail to the limit of new railing, furnished and erected complete in accordance with the plans and specifications and the directions of the Engineer.

5. BASIS OF PAYMENT:

The price bid shall be a unit price per foot of pipe railing and shall include the cost of furnishing all labor, materials, and equipment necessary to erect the railing and shall include all necessary excavation and disposal, painting, concrete and reinforcing for the curb or footings and all incidental expenses necessary to complete the work in accordance with the plans and specifications to the satisfaction of the Engineer.

END OF SECTION

ITEM 537-S - INTERPRETIVE SIGN

1. DESCRIPTION:

This work shall consist of furnishing and installing INTERPRETIVE SIGN PANELS in accordance with the contract documents and as directed by Nassau County.

2. MATERIALS:

Unless otherwise specified herein, all materials for this work shall meet the requirements of the Nassau County Standard Specifications. All materials for this work shall be new stock, free from defects impairing strength, durability, and appearance.

Sign Panel:

Sign panels shall be exterior grade solid phenolic resin that is resistant to ultraviolet (UV) radiation deterioration and graffiti-proof. The size (24" x 36") and thickness (1/2" grade) of the panels shall be as shown on the plans or as directed the Nassau County' s Engineer. The embedded graphic panels shall have digitally printed subsurface images fused into a single panel and under the effect of high temperature and pressure. All exterior signage shall be weather tight.

The panels shall be of a consistent ½" thickness for all sizes. The finish of all panels is to be opaque and matte. The panels are to be rigid and flat. No warped areas or bowing will be accepted. All sign panels must be obtained from a single manufacturer.

The panels must be resistant to scratching, ink, paint, crayon, steam, acids, and aromatics. All ink, crayon, or paint markings should be readily removable with soap and water or solvents without harm. The panels shall also be resistant to burning by cigarettes.

Panels shall not break, separate, flake, or fray under impact form thrown objects such as rocks. Panels must be resistant to mold and fungus.

The Nassau County's Engineer will provide a digital file with images, fonts and artwork to the Engineer for sign panel manufacturing.

The sign panels shall be as follows or approved equal:

1 Model 24 " x 36 " CDG 224 by Fossil Graphics Corp.- 44 Jefryn Blvd., Deer Park, NY 11729, Office Phone 631-254-9200

- (2) Mounted on Double Ground Mounts with 45 degree panel plates and
  (2) Mounted on Flat Rail with 45 degree Rail Mount Bracket Pedestals

OR

2 Model 24" x 36" CHPL ½" XT w/ Stainless Steel Posts by Izone Imaging - 2526 Charter Oak Drive, Suite 100, Temple, TX 76502 Office Phone 888-464-9663.

- (2) Mounted on Double Ground Mounts with 45 degree panel plates and
  (2) Mounted on Flat Rail with 45 degree Rail Mount Bracket Pedestals

OR

3. Low Profile Traditional 24" x 36" panel as manufactured by Hopewell Manufacturing Inc., 217 N. Franklin Street, Waynesboro, PA 17268, Office Phone 301-582-4736
   (2) Mounted on Double Ground Mounts with 45 degree panel plates and
   (2) Mounted on Flat Rail with 45 degree Rail Mount Bracket Pedestals

The Nassau County shall retain full rights to all designs shown or specified. Designs may not be manufactured, reproduced, or exhibited without the written permission of the Nassau County.

Mounting Hardware:

All mounting hardware shall be stainless steel. The types and sizes shall be as indicated on the plans.

3. CONSTRUCTION DETAILS:

The Contractor shall verify the quantity, location, and details of each sign with the Nassau County's Engineer or designee prior to ordering.

Shop Drawings:

The Contractor shall submit Shop Drawings for each proposed sign location, installation and mounting methods, for review and approval by the Nassau County's Engineer or designee prior to ordering materials and commencing with fabrication.

Samples:

Samples of each type of material, finish, and color shall be submitted to the County's Engineer for approval prior to fabrication.

Fabrication:

All fabrication and installation shall be in accordance with the highest standards of the trade. All signs and components shall be complete and free from visual, structural and mechanical defects. All source materials shall be inspected upon arrival. The Engineer shall be notified immediately if any source material is inadequate or unacceptable for reproduction.

The County shall be notified of any discrepancies in the drawings, changes required in construction details, and/or field dimensions or special conditions prior to fabrication.

No fabrication or installation material or procedure shall be used that will in any way change the visual quality or in any manner have an adverse effect on existing materials and surfaces.

The Contractor shall arrange a meeting with the Nassau County's Engineer and/or other representatives at the site for confirmation of the final locations of sign elements.

All mechanically fastened signs shall incorporate provisions for attachment and removal as required using no visible screws or fasteners except where noted on the drawings.

Protection of Sign Panels:

The sign panels shall be protected during transportation, handling, and storage. The panels shall be stored above ground on level, non-staining blocking and covered with weatherproof coverings to prevent staining by weather, dirt, mud, oils, and grease. All damaged materials shall be immediately removed from the job site.

Installation:

The sign panels shall be installed at the locations indicated in the plans. The panels shall be mounted such that it is true, plumb, and level in its required position.

Cleaning:

Upon completion of the installation work, each sign and post shall be thoroughly cleaned, removing all dirt, mortar, and stains and left in a condition acceptable to the Nassau County's Engineer. Temporary protection shall be provided during the remainder of the construction to protect the finished work from damage. All damaged work shall be removed and replaced at no cost to the County prior to final acceptance.

4. METHOD OF MEASUREMENTS:

The quantity to be paid for shall be the number of EACH INTERPRETIVE SIGN satisfactorily furnished and installed in accordance with the plans.

5. BASIS OF PAYMENT:

The unit price bid per EACH INTERPRETIVE SIGN shall include the cost of furnishing all labor, materials, and tools, equipment and incidentals necessary to install this item, including excavation, backfill, and concrete footings, all in accordance with the specifications and drawings.

ITEM 600-SE-1 – SITE ELECTRICAL AND LIGHTING WORK

1. DESCRIPTION:

Under this item the Contractor shall furnish and install all necessary electrical systems and site lighting and power requirements as shown on the plans. Work shall include, but not be limited to:

a. Remove all conduit, cable, light fixtures and poles and cap conduit adjacent to poles where shown on the plans and details;
b. Remove floodlight poles with foundations and fixtures and associated conduit and wiring as shown on the plans and details.
c. Remove shed light fixture and all associated electrical equipment, conduit and wire back to site panel circuit, and shed electric unit heater, as shown on the plans and details. Install new shed light fixture and receptacles as shown on the plans and details.
d. Remove all existing electrical wiring in building where in conflict with future passageway.
e. Install new recessed downlights as building entrance as show on the plans and details.
f. Replace flood light fixtures and cobra head fixtures with specified new light fixtures.
g. Provide all electrical panels, receptacles, Hoffman boxes, contactors, junction boxes, light fixtures, footings, conduit and cable as shown on the electrical drawings to power park lighting fixtures, new security systems and downlights in building park entrance.
h. Provide all necessary trenching, excavation and backfill.

2. MATERIALS AND 3.CONSTRUCTION DETAILS:

a. Lighting

A. See Appendix A for Pole Flood Light Fixtures Specifications & Data Sheets, All products as specified in attached Appendix A, or as approved equal.

B. See Appendix B for Pole Cobra Head Light Fixtures Specifications & Data Sheets, All products as specified in attached Appendix B, or as approved equal.

C. See Appendix C for Recessed Downlights at Building Entrance Fixtures Specifications & Data Sheets, all products as specified in attached Appendix C, or as approved equal.

D. See Appendix D for Shed Light Fixtures Specifications & Data Sheets, all products as specified in attached Appendix D, or as approved equal.

E. See Appendix E for Reference Sections

1. Reference Section 260500
2. Reference Section 260519
3. Reference Section 260526
4. Reference Section 260529
5. Reference Section 260533
6. Reference Section 260543
7. Reference Section 260544
8. Reference Section 260553
9. Reference Section 264313
10. Reference Section 265600
11. Reference Section 280513
12. Reference Section 280528
13. Reference Section 280544

4. METHOD OF MEASUREMENT AND 5. BASIS OF PAYMENT:

Payment shall be made under the lump sum amount for removing, furnishing, installing, connecting and testing all electrical and lighting work. The stipulated price shall include all work necessary and required for work as indicated and implied on the contract drawings and specified herein.

The lump sum price bid shall cover the cost of removing existing lighting, storing, testing, furnishing and installing all required items including, but not limited to, conductors, conduits, ductbank, splices, terminations, electrical components, hardware, concrete footings, junction boxes, panels boards, trenching, incidentals, all labor and materials necessary and for the completion of this work as indicated on the drawings, implied and as specified herein, or as by the Engineer and to his complete satisfaction.

Progress payments will be made as follows: A 40% payment will be made when 50% of the work has been placed; a second 40% payment will be made when 100% of the work has been placed; the final 20% payment will be made when the work is completed and accepted by the Engineer.

Costs for concrete pads for panel boards shall be paid for under Item 28 – Cement Concrete Driveways and Aprons and pavement and lawn restoration shall be paid for under various contract items. Cost for trenching and backfill is included under this item.

END OF SECTION

Streetworks

DESCRIPTION

The Galleon™ LED Flood luminaire combines the low-profile design of the Galleon with the mounting angle flexibility of a pole-mounted floodlight. With a maximum tilt angle of 60° from horizontal, and patented, high-efficiency AccuLED Optics™ technology, it provides uniform and energy conscious illumination for parking lots, container/rail yards and highway projects. Mounts direct to pole or to a bullhorn or pole-top tenon. IP66 rated and UL/cUL Listed for wet locations.

Catalog #	GAN-AF-08-LED-U-T4FT-BZ-ADJA(S)	**Type**
Project	Centennial Park - Nassau County	
Comments		**Date**
Prepared by	Topinka & D'Angelo, Inc.	June 2020

SPECIFICATION FEATURES

Construction
Extruded aluminum driver enclosure thermally isolated from Light Squares for optimal thermal performance. Heavy-wall, die-cast aluminum end caps enclose housing and die-cast aluminum heat sinks. A unique, patent pending interlocking housing and heat sink provides scalability with superior structural rigidity. 3G vibration and IP66 rated up to 60° from horizontal. Optional tool-less hardware available for ease of entry into electrical chamber.

Optics
Patented, high-efficiency injection-molded AccuLED Optics technology. Optics are precisely designed to shape the distribution maximizing efficiency and application spacing. AccuLED Optics create consistent distributions with the scalability to meet customized application requirements. Offered standard in 4000K (+/- 275K) CCT 70 CRI. Optional 6000K CCT, 5000K CCT and 3000K CCT.

Electrical
LED drivers are mounted to removable tray assembly for ease of maintenance.120-277V 50/60Hz, 347V 60Hz or 480V 60Hz operation. 480V is compatible for use with 480V Wye systems only. Standard with 0-10V dimming. Shipped standard with our proprietary circuit module designed to withstand 10kV of transient line surge. The Galleon LED Flood luminaire is suitable for operation in -40°C to 40°C ambient environments. For applications with ambient temperatures exceeding 40°C, specify the HA (High Ambient) option. Light Squares are IP66 rated. 90% lumen maintenance expected at 60,000 hours. Available in standard 1A drive current and optional 600mA, 800mA and 1200mA drive currents (nominal).

Mounting
Cast aluminum knuckle arm mounts directly to fixture housing, and is available with either commercial pole mount or slipfitter for bullhorn, pipe or tenon mount. Can be tilted up to 60° from horizontal without compromising vibration or IP rating. Slipfitter compatible with 2-3/8" – 3" pipe or tenon mounting.

Finish
Housing finished in super durable TGIC polyester powder coat paint, 2.5 mil nominal thickness for superior protection against fade and wear. Heat sink is powder coated black. Standard housing colors include black, bronze, grey, white, dark platinum and graphite metallic. RAL and custom color matches available.

Warranty
Five-year warranty.

GAN GALLEON LED FLOOD

1-10 Light Squares
Solid State LED

FLOODLIGHT LUMINAIRE

DIMENSIONS

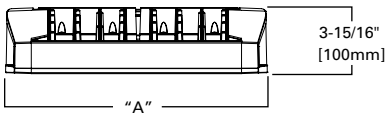

DIMENSIONAL DATA

Number of Light Squares	"A" Width
1-4	15-1/2" (394mm)
5-6	21-5/8" (549mm)
7-8	27-5/8" (702mm)
9-10	33-3/4" (857mm)

Direct Pole Mount

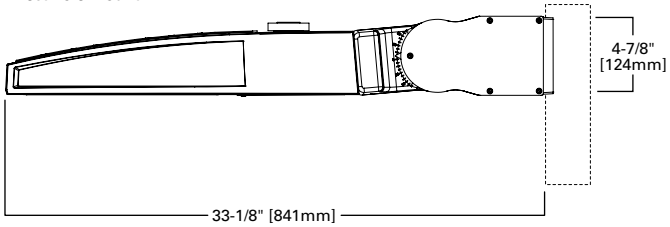

Wall Mount

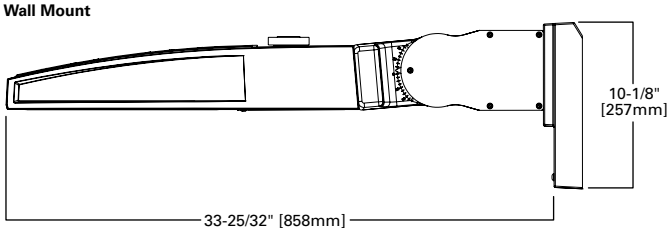

Slipfitter Mount

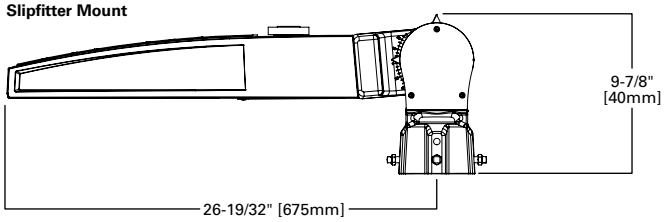

DRILLING PATTERN

TYPE "N"

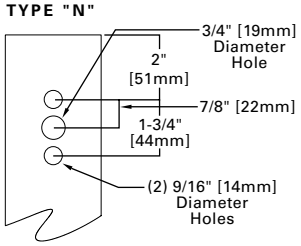

CERTIFICATION DATA

UL/cUL Wet Location Listed
ISO 9001
LM79 / LM80 Compliant
3G Vibration Rated up to 60° from Horizontal
IP66 Rated up to 60° from Horizontal
DesignLights Consortium® Qualified*

ENERGY DATA

Electronic LED Driver
>0.9 Power Factor
<20% Total Harmonic Distortion
120V-277V 50/60Hz
347V & 480V 60Hz
-40°C Min. Temperature
40°C Max. Temperature
50°C Max. Temperature (HA Option)

*www.designlights.org

EPA CHART

Tilt Angle (Degrees)	Number of Light Squares	Weight	1 @ 90°	2 @ 180°	2 @ 90°	2 @ 120°	3 @ 90°	3 @ 120°	4 @ 90°
0°	1-4	34 lbs. (15.45 kgs.)	1.21	2.42	1.94	2.19	2.92	2.83	3.87
	5-6	45 lbs. (20.45 kgs.)	1.21	2.42	2.12	2.28	3.12	3.12	4.23
	7-8	55 lbs. (25.00 kgs.)	1.21	2.42	--	2.39	--	3.42	--
	9-10	63 lbs. (28.63 kgs.)	1.21	2.42	--	2.51	--	3.73	--
15°	1-4	34 lbs. (15.45 kgs.)	1.21	2.42	2.14	2.39	3.14	3.16	4.23
	5-6	45 lbs. (20.45 kgs.)	1.21	2.42	2.46	2.46	3.43	3.60	4.91
	7-8	55 lbs. (25.00 kgs.)	1.30	2.59	--	2.65	--	4.06	--
	9-10	63 lbs. (28.63 kgs.)	1.58	3.17	--	3.02	--	4.54	--
30°	1-4	34 lbs. (15.45 kgs.)	1.41	2.82	2.94	2.78	4.05	4.25	5.88
	5-6	45 lbs. (20.45 kgs.)	1.96	3.92	3.66	3.55	5.13	5.18	7.31
	7-8	55 lbs. (25.00 kgs.)	2.51	5.01	--	4.33	--	6.16	--
	9-10	63 lbs. (28.63 kgs.)	3.06	6.12	--	5.14	--	7.23	--
45°	1-4	34 lbs. (15.45 kgs.)	1.99	2.99	3.70	3.60	5.19	5.23	7.40
	5-6	45 lbs. (20.45 kgs.)	2.77	5.55	4.76	4.72	6.76	6.67	9.81
	7-8	55 lbs. (25.00 kgs.)	3.54	7.09	--	5.85	--	8.16	--
	9-10	63 lbs. (28.63 kgs.)	4.33	8.66	--	7.01	--	9.70	--
60°	1-4	34 lbs. (15.45 kgs.)	2.44	4.88	4.30	4.24	6.09	6.04	8.60
	5-6	45 lbs. (20.45 kgs.)	3.40	6.79	--	5.64	--	7.88	--
	7-8	55 lbs. (25.00 kgs.)	4.34	8.68	--	7.03	--	9.72	--
	9-10	63 lbs. (28.63 kgs.)	5.30	10.60	--	--	--	--	--

Note: Mounting not valid where left blank due to clearance.

LUMEN MAINTENANCE

Drive Current	Ambient Temperature	TM-21 Lumen Maintenance (60,000 Hours)	Projected L70 (Hours)
Up to 1A	Up to 50°C	> 95%	416,000
1.2A	Up to 40°C	> 90%	205,000

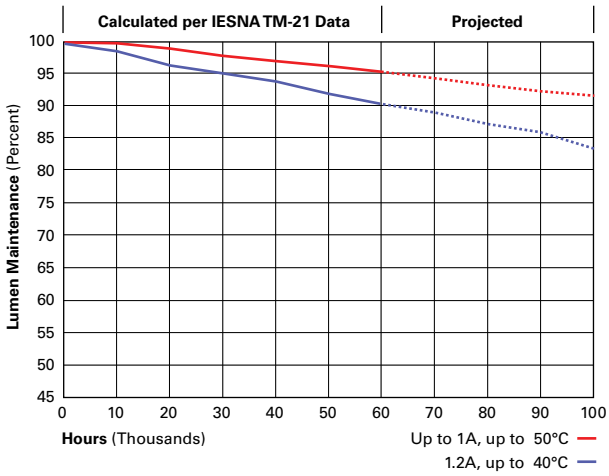

LUMEN MULTIPLIER

Ambient Temperature	Ambient Temperature
0°	1.02
10°	1.01
25°	1.00
40°	0.99
50°	0.97

NOMINAL POWER LUMENS (1.2A)

Number of Light Squares		1	2	3	4	5	6	7	8	9	10
Nominal Power (Watts)		67	129	191	258	320	382	448	511	575	640
Input Current @ 120V (A)		0.58	1.16	1.78	2.31	2.94	3.56	4.09	4.71	5.34	5.87
Input Current @ 208V (A)		0.33	0.63	0.93	1.27	1.57	1.87	2.22	2.52	2.8	3.14
Input Current @ 240V (A)		0.29	0.55	0.80	1.10	1.35	1.61	1.93	2.18	2.41	2.71
Input Current @ 277V (A)		0.25	0.48	0.70	0.96	1.18	1.39	1.69	1.90	2.09	2.36
Input Current @ 347V (A)		0.20	0.39	0.57	0.78	0.96	1.15	1.36	1.54	1.72	1.92
Input Current @ 480V (A)		0.15	0.30	0.43	0.60	0.73	0.85	1.03	1.16	1.28	1.45
Optics											
T2	4000K/5000K Lumens	6,863	13,412	20,011	26,441	32,761	39,205	46,364	52,534	58,601	64,880
	3000K Lumens	6,489	12,681	18,919	25,000	30,974	37,066	43,836	49,668	55,405	61,341
	BUG Rating	B1-U0-G2	B2-U0-G2	B3-U0-G3	B3-U0-G4	B3-U0-G4	B3-U0-G4	B4-U0-G5	B4-U0-G5	B4-U0-G5	B4-U0-G5
T2R	4000K/5000K Lumens	7,285	14,238	21,246	28,072	34,780	41,621	49,221	55,770	62,212	68,878
	3000K Lumens	6,888	13,462	20,087	26,541	32,884	39,351	46,537	52,729	58,819	65,122
	BUG Rating	B1-U0-G1	B2-U0-G2	B2-U0-G3	B3-U0-G3	B3-U0-G4	B3-U0-G4	B3-U0-G4	B3-U0-G5	B4-U0-G5	B4-U0-G5
T3	4000K/5000K Lumens	6,995	13,670	20,397	26,951	33,391	39,959	47,256	53,544	59,728	66,130
	3000K Lumens	6,613	12,924	19,284	25,480	31,570	37,780	44,679	50,624	56,471	62,524
	BUG Rating	B1-U0-G2	B2-U0-G2	B3-U0-G3	B3-U0-G4	B3-U0-G4	B3-U0-G5	B4-U0-G5	B4-U0-G5	B4-U0-G5	B4-U0-G5
T3R	4000K/5000K Lumens	7,150	13,973	20,850	27,549	34,134	40,846	48,307	54,734	61,056	67,598
	3000K Lumens	6,761	13,212	19,713	26,046	32,272	38,619	45,673	51,750	57,726	63,911
	BUG Rating	B1-U0-G2	B2-U0-G2	B2-U0-G3	B3-U0-G4	B3-U0-G4	B3-U0-G5	B3-U0-G5	B3-U0-G5	B4-U0-G5	B4-U0-G5
T4FT	4000K/5000K Lumens	7,036	13,748	20,515	27,107	33,586	40,191	47,530	53,854	60,074	66,512
	3000K Lumens	6,652	12,999	19,397	25,629	31,754	37,999	44,938	50,917	56,797	62,885
	BUG Rating	B1-U0-G2	B2-U0-G3	B2-U0-G4	B3-U0-G4	B3-U0-G5	B3-U0-G5	B3-U0-G5	B3-U0-G5	B4-U0-G5	B4-U0-G5
T4W	4000K/5000K Lumens	6,945	13,571	20,249	26,756	33,152	39,671	46,917	53,160	59,298	65,653
	3000K Lumens	6,566	12,831	19,146	25,297	31,344	37,508	44,358	50,260	56,064	62,072
	BUG Rating	B1-U0-G2	B2-U0-G3	B3-U0-G4	B3-U0-G4	B3-U0-G5	B3-U0-G5	B4-U0-G5	B4-U0-G5	B4-U0-G5	B4-U0-G5
SL2	4000K/5000K Lumens	6,851	13,388	19,977	26,396	32,704	39,137	46,283	52,444	58,498	64,768
	3000K Lumens	6,477	12,658	18,888	24,957	30,920	37,003	43,759	49,584	55,308	61,235
	BUG Rating	B1-U0-G2	B2-U0-G3	B3-U0-G3	B3-U0-G4	B3-U0-G4	B3-U0-G5	B4-U0-G5	B4-U0-G5	B4-U0-G5	B4-U0-G5
SL3	4000K/5000K Lumens	6,994	13,668	20,394	26,947	33,388	39,953	47,249	53,537	59,720	66,119
	3000K Lumens	6,612	12,922	19,281	25,477	31,567	37,774	44,673	50,618	56,463	62,514
	BUG Rating	B1-U0-G2	B2-U0-G3	B2-U0-G3	B3-U0-G4	B3-U0-G5	B3-U0-G5	B3-U0-G5	B3-U0-G5	B4-U0-G5	B4-U0-G5
SL4	4000K/5000K Lumens	6,645	12,986	19,378	25,603	31,723	37,962	44,893	50,868	56,743	62,824
	3000K Lumens	6,282	12,279	18,321	24,207	29,993	35,892	42,445	48,094	53,648	59,398
	BUG Rating	B1-U0-G2	B1-U0-G3	B2-U0-G4	B2-U0-G4	B2-U0-G5	B3-U0-G5	B3-U0-G5	B3-U0-G5	B3-U0-G5	B3-U0-G5
5NQ	4000K/5000K Lumens	7,214	14,097	21,036	27,795	34,437	41,210	48,734	55,220	61,597	68,199
	3000K Lumens	6,820	13,329	19,888	26,279	32,558	38,962	46,077	52,208	58,237	64,479
	BUG Rating	B3-U0-G1	B3-U0-G2	B4-U0-G2	B4-U0-G2	B5-U0-G2	B5-U0-G3	B5-U0-G3	B5-U0-G4	B5-U0-G4	B5-U0-G4
5MQ	4000K/5000K Lumens	7,347	14,356	21,423	28,306	35,071	41,969	49,632	56,237	62,730	69,454
	3000K Lumens	6,947	13,573	20,254	26,762	33,158	39,680	46,925	53,170	59,309	65,667
	BUG Rating	B3-U0-G1	B4-U0-G2	B4-U0-G2	B5-U0-G3	B5-U0-G4	B5-U0-G4	B5-U0-G4	B5-U0-G5	B5-U0-G5	B5-U0-G5
5WQ	4000K/5000K Lumens	7,366	14,396	21,480	28,381	35,164	42,080	49,765	56,386	62,898	69,639
	3000K Lumens	6,964	13,610	20,308	26,833	33,247	39,786	47,050	53,311	59,468	65,842
	BUG Rating	B3-U0-G2	B4-U0-G2	B5-U0-G3	B5-U0-G4	B5-U0-G4	B5-U0-G4	B5-U0-G5	B5-U0-G5	B5-U0-G5	B5-U0-G5
SLL/SLR	4000K/5000K Lumens	6,147	12,010	17,921	23,679	29,339	35,109	41,521	47,046	52,478	58,102
	3000K Lumens	5,811	11,355	16,944	22,388	27,739	33,194	39,256	44,479	49,617	54,933
	BUG Rating	B1-U0-G2	B2-U0-G3	B2-U0-G3	B3-U0-G4	B3-U0-G4	B3-U0-G5	B3-U0-G5	B3-U0-G5	B3-U0-G5	B3-U0-G5
RW	4000K/5000K Lumens	7,149	13,970	20,846	27,543	34,126	40,837	48,295	54,722	61,042	67,582
	3000K Lumens	6,760	13,208	19,709	26,041	32,264	38,610	45,661	51,738	57,713	63,897
	BUG Rating	B3-U0-G1	B3-U0-G2	B4-U0-G2	B4-U0-G2	B5-U0-G3	B5-U0-G3	B5-U0-G4	B5-U0-G4	B5-U0-G4	B5-U0-G4
AFL	4000K/5000K Lumens	7,175	14,021	20,921	27,643	34,249	40,986	48,470	54,920	61,262	67,828
	3000K Lumens	6,784	13,256	19,780	26,136	32,381	38,750	45,827	51,925	57,922	64,129
	BUG Rating	B1-U0-G1	B2-U0-G2	B2-U0-G2	B3-U0-G3	B3-U0-G3	B3-U0-G3	B3-U0-G3	B3-U0-G3	B4-U0-G4	B4-U0-G4

* Nominal data for 70 CRI.

NOMINAL POWER LUMENS (1A)

Number of Light Squares		1	2	3	4	5	6	7	8	9	10
Nominal Power (Watts)		59	113	166	225	279	333	391	445	501	558
Input Current @ 120V (A)		0.51	1.02	1.53	2.03	2.55	3.06	3.56	4.08	4.60	5.07
Input Current @ 208V (A)		0.29	0.56	0.82	1.11	1.37	1.64	1.93	2.19	2.46	2.75
Input Current @ 240V (A)		0.26	0.48	0.71	0.96	1.19	0.41	1.67	1.89	2.12	2.39
Input Current @ 277V (A)		0.23	0.42	0.61	0.83	1.03	1.23	1.45	1.65	1.84	2.09
Input Current @ 347V (A)		0.17	0.32	0.50	0.64	0.82	1.00	1.14	1.32	1.50	1.68
Input Current @ 480V (A)		0.14	0.24	0.37	0.48	0.61	0.75	0.91	0.99	1.12	1.28
Optics											
T2	4000K/5000K Lumens	6,256	12,225	18,242	24,104	29,865	35,739	42,265	47,888	53,420	59,144
	3000K Lumens	5,915	11,559	17,248	22,789	28,236	33,790	39,960	45,277	50,506	55,919
	BUG Rating	B1-U0-G2	B2-U0-G2	B3-U0-G3	B3-U0-G4	B3-U0-G4	B3-U0-G4	B4-U0-G5	B4-U0-G5	B4-U0-G5	B4-U0-G5
T2R	4000K/5000K Lumens	6,642	12,979	19,366	25,589	31,705	37,941	44,870	50,840	56,711	62,789
	3000K Lumens	6,280	12,271	18,311	24,193	29,976	35,872	42,423	48,068	53,619	59,365
	BUG Rating	B1-U0-G1	B2-U0-G2	B2-U0-G2	B3-U0-G3	B3-U0-G4	B3-U0-G4	B3-U0-G4	B3-U0-G5	B4-U0-G5	B4-U0-G5
T3	4000K/5000K Lumens	6,377	12,461	18,593	24,568	30,439	36,426	43,077	48,810	54,447	60,282
	3000K Lumens	-	-	-	-	-	-	-	-	-	-
	BUG Rating	B1-U0-G2	B2-U0-G2	B3-U0-G3	B3-U0-G4	B3-U0-G4	B3-U0-G5	B4-U0-G5	B4-U0-G5	B4-U0-G5	B4-U0-G5
T3R	4000K/5000K Lumens	6,518	12,739	19,006	25,113	31,116	37,235	44,036	49,895	55,658	61,622
	3000K Lumens	6,029	11,781	17,579	23,229	28,779	34,440	40,729	46,148	51,478	56,995
	BUG Rating	B1-U0-G2	B2-U0-G2	B2-U0-G3	B3-U0-G4	B3-U0-G4	B3-U0-G5	B3-U0-G5	B3-U0-G5	B4-U0-G5	B4-U0-G5
T4FT	4000K/5000K Lumens	6,414	12,533	18,702	24,710	30,616	36,637	43,328	49,093	54,763	60,631
	3000K Lumens	6,064	11,849	17,681	23,363	28,946	34,638	40,966	46,417	51,776	57,325
	BUG Rating	B1-U0-G2	B2-U0-G3	B2-U0-G4	B3-U0-G4	B3-U0-G5	B3-U0-G5	B3-U0-G5	B3-U0-G5	B4-U0-G5	B4-U0-G5
T4W	4000K/5000K Lumens	6,331	12,372	18,459	24,391	30,221	36,163	42,769	48,459	54,056	59,849
	3000K Lumens	5,986	11,697	17,452	23,061	28,572	34,192	40,436	45,817	51,108	56,585
	BUG Rating	B1-U0-G2	B2-U0-G3	B3-U0-G4	B3-U0-G4	B3-U0-G5	B3-U0-G5	B4-U0-G5	B4-U0-G5	B4-U0-G5	B4-U0-G5
SL2	4000K/5000K Lumens	6,245	12,205	18,212	24,062	29,813	35,677	42,192	47,807	53,326	59,042
	3000K Lumens	5,904	11,539	17,218	22,750	28,187	33,732	39,891	45,199	50,418	55,822
	BUG Rating	B1-U0-G2	B2-U0-G3	B3-U0-G3	B3-U0-G4	B3-U0-G4	B3-U0-G5	B4-U0-G5	B4-U0-G5	B4-U0-G5	B4-U0-G5
SL3	4000K/5000K Lumens	6,376	12,460	18,591	24,564	30,436	36,421	43,072	48,803	54,439	60,273
	3000K Lumens	6,028	11,780	17,578	23,224	28,776	34,435	40,723	46,141	51,471	56,986
	BUG Rating	B1-U0-G2	B2-U0-G3	B2-U0-G3	B3-U0-G4	B3-U0-G4	B3-U0-G5	B3-U0-G5	B3-U0-G5	B4-U0-G5	B4-U0-G5
SL4	4000K/5000K Lumens	6,058	11,838	17,664	23,340	28,918	34,605	40,924	46,370	51,727	57,269
	3000K Lumens	5,727	11,193	16,701	22,067	27,341	32,718	38,692	43,841	48,906	54,146
	BUG Rating	B1-U0-G2	B1-U0-G3	B2-U0-G4	B2-U0-G4	B2-U0-G5	B3-U0-G5	B3-U0-G5	B3-U0-G5	B3-U0-G5	B3-U0-G5
5NQ	4000K/5000K Lumens	6,577	12,851	19,176	25,336	31,392	37,566	44,426	50,337	56,151	62,170
	3000K Lumens	6,218	12,151	18,131	23,955	29,680	35,517	42,003	47,592	53,089	58,779
	BUG Rating	B2-U0-G1	B3-U0-G2	B4-U0-G2	B4-U0-G2	B5-U0-G2	B5-U0-G3	B5-U0-G3	B5-U0-G3	B5-U0-G4	B5-U0-G4
5MQ	4000K/5000K Lumens	6,697	13,088	19,528	25,803	31,970	38,258	45,243	51,264	57,185	63,313
	3000K Lumens	6,332	12,374	18,463	24,395	30,227	36,171	42,776	48,468	54,066	59,861
	BUG Rating	B3-U0-G1	B4-U0-G2	B4-U0-G2	B5-U0-G3	B5-U0-G4	B5-U0-G4	B5-U0-G4	B5-U0-G5	B5-U0-G5	B5-U0-G5
5WQ	4000K/5000K Lumens	6,715	13,122	19,580	25,871	32,055	38,360	45,365	51,401	57,337	63,482
	3000K Lumens	6,348	12,406	18,513	24,461	30,307	36,268	42,891	48,599	54,210	60,021
	BUG Rating	B3-U0-G2	B4-U0-G2	B5-U0-G3	B5-U0-G3	B5-U0-G4	B5-U0-G4	B5-U0-G5	B5-U0-G5	B5-U0-G5	B5-U0-G5
SLL/SLR	4000K/5000K Lumens	5,604	10,949	16,337	21,586	26,745	32,004	37,850	42,886	47,838	52,965
	3000K Lumens	5,298	10,351	15,446	20,409	25,287	30,258	35,786	40,547	45,229	50,077
	BUG Rating	B1-U0-G2	B1-U0-G3	B2-U0-G3	B2-U0-G4	B3-U0-G4	B3-U0-G5	B3-U0-G5	B3-U0-G5	B3-U0-G5	B3-U0-G5
RW	4000K/5000K Lumens	6,517	12,735	19,002	25,107	31,109	37,227	44,025	49,883	55,644	61,607
	3000K Lumens	6,162	12,040	17,965	23,738	29,413	35,197	41,623	47,163	52,609	58,247
	BUG Rating	B3-U0-G1	B3-U0-G2	B4-U0-G2	B4-U0-G2	B5-U0-G3	B5-U0-G3	B5-U0-G3	B5-U0-G4	B5-U0-G4	B5-U0-G4
AFL	4000K/5000K Lumens	6,541	12,781	19,072	25,199	31,221	37,362	44,185	50,065	55,846	61,831
	3000K Lumens	6,184	12,084	18,032	23,825	29,519	35,325	41,775	47,334	52,801	58,459
	BUG Rating	B1-U0-G1	B2-U0-G2	B2-U0-G2	B3-U0-G2	B3-U0-G3	B3-U0-G3	B3-U0-G3	B3-U0-G3	B4-U0-G4	B4-U0-G4

* Nominal data for 70 CRI.

NOMINAL POWER LUMENS (800MA)

Number of Light Squares		1	2	3	4	5	6	7	8	9	10
Nominal Power (Watts)		44	85	124	171	210	249	295	334	374	419
Input Current @ 120V (A)		0.39	0.77	1.13	1.54	1.90	2.26	2.67	3.03	3.39	3.80
Input Current @ 208V (A)		0.22	0.44	0.62	0.88	1.06	1.24	1.50	1.68	1.87	2.12
Input Current @ 240V (A)		0.19	0.38	0.54	0.76	0.92	1.08	1.30	1.46	1.62	1.84
Input Current @ 277V (A)		0.17	0.36	0.47	0.72	0.83	0.95	1.19	1.31	1.42	1.67
Input Current @ 347V (A)		0.15	0.24	0.38	0.49	0.63	0.77	0.87	1.01	1.15	1.52
Input Current @ 480V (A)		0.11	0.18	0.29	0.37	0.48	0.59	0.66	0.77	0.88	0.96
Optics											
T2	4000K/5000K Lumens	5,054	9,878	14,739	19,475	24,129	28,875	34,148	38,691	43,159	47,785
	3000K Lumens	4,779	9,338	13,935	18,412	22,813	27,301	32,286	36,581	40,805	45,179
	BUG Rating	B1-U0-G1	B2-U0-G2	B2-U0-G2	B3-U0-G3	B3-U0-G3	B3-U0-G4	B3-U0-G4	B3-U0-G4	B4-U0-G5	B4-U0-G5
T2R	4000K/5000K Lumens	5,366	10,486	15,647	20,675	25,616	30,654	36,252	41,076	45,819	50,730
	3000K Lumens	5,074	9,914	14,794	19,548	24,218	28,982	34,276	38,835	43,320	47,964
	BUG Rating	B1-U0-G1	B1-U0-G2	B2-U0-G2	B2-U0-G2	B3-U0-G3	B3-U0-G3	B3-U0-G4	B3-U0-G4	B3-U0-G4	B3-U0-G5
T3	4000K/5000K Lumens	5,153	10,068	15,022	19,849	24,593	29,430	34,805	39,436	43,990	48,705
	3000K Lumens	4,872	9,519	14,203	18,766	23,251	27,825	32,907	37,285	41,591	46,048
	BUG Rating	B1-U0-G1	B2-U0-G2	B2-U0-G2	B3-U0-G3	B3-U0-G4	B3-U0-G4	B3-U0-G4	B3-U0-G5	B4-U0-G5	B4-U0-G5
T3R	4000K/5000K Lumens	5,266	10,292	15,356	20,290	25,140	30,084	35,578	40,312	44,968	49,786
	3000K Lumens	4,979	9,731	14,518	19,184	23,769	28,443	33,638	38,114	42,516	47,071
	BUG Rating	B1-U0-G2	B1-U0-G2	B2-U0-G3	B2-U0-G3	B3-U0-G4	B3-U0-G4	B3-U0-G5	B3-U0-G5	B3-U0-G5	B3-U0-G5
T4FT	4000K/5000K Lumens	5,182	10,126	15,109	19,964	24,736	29,600	35,006	39,664	44,245	48,987
	3000K Lumens	4,899	9,574	14,285	18,876	23,387	27,986	33,097	37,501	41,832	46,315
	BUG Rating	B1-U0-G2	B1-U0-G2	B2-U0-G3	B2-U0-G4	B3-U0-G4	B3-U0-G4	B3-U0-G5	B3-U0-G5	B3-U0-G5	B3-U0-G5
T4W	4000K/5000K Lumens	5,115	9,995	14,914	19,706	24,417	29,218	34,554	39,152	43,674	48,354
	3000K Lumens	4,836	9,450	14,100	18,631	23,085	27,624	32,670	37,017	41,292	45,717
	BUG Rating	B1-U0-G2	B2-U0-G2	B2-U0-G3	B3-U0-G4	B3-U0-G4	B3-U0-G4	B3-U0-G5	B3-U0-G5	B4-U0-G5	B4-U0-G5
SL2	4000K/5000K Lumens	5,046	9,860	14,713	19,441	24,087	28,825	34,089	38,625	43,085	47,702
	3000K Lumens	4,771	9,322	13,911	18,381	22,774	27,253	32,229	36,518	40,735	45,101
	BUG Rating	B1-U0-G1	B2-U0-G2	B2-U0-G3	B3-U0-G3	B3-U0-G4	B3-U0-G4	B3-U0-G4	B3-U0-G5	B3-U0-G5	B4-U0-G5
SL3	4000K/5000K Lumens	5,152	10,067	15,020	19,846	24,591	29,426	34,800	39,431	43,984	48,698
	3000K Lumens	4,871	9,518	14,200	18,764	23,249	27,822	32,902	37,280	41,585	46,042
	BUG Rating	B1-U0-G2	B1-U0-G2	B2-U0-G3	B2-U0-G3	B3-U0-G4	B3-U0-G4	B3-U0-G5	B3-U0-G5	B3-U0-G5	B3-U0-G5
SL4	4000K/5000K Lumens	4,894	9,565	14,271	18,857	23,364	27,959	33,065	37,465	41,792	46,270
	3000K Lumens	4,627	9,043	13,492	17,829	22,090	26,434	31,261	35,422	39,513	43,746
	BUG Rating	B1-U0-G2	B1-U0-G3	B1-U0-G3	B2-U0-G4	B2-U0-G4	B2-U0-G4	B2-U0-G5	B3-U0-G5	B3-U0-G5	B3-U0-G5
5NQ	4000K/5000K Lumens	5,313	10,383	15,493	20,470	25,363	30,351	35,893	40,669	45,367	50,229
	3000K Lumens	5,024	9,817	14,647	19,354	23,980	28,696	33,936	38,452	42,893	47,490
	BUG Rating	B2-U0-G1	B3-U0-G1	B3-U0-G2	B4-U0-G2	B4-U0-G2	B4-U0-G2	B5-U0-G3	B5-U0-G3	B5-U0-G3	B5-U0-G3
5MQ	4000K/5000K Lumens	5,411	10,574	15,778	20,848	25,830	30,911	36,554	41,418	46,202	51,154
	3000K Lumens	5,117	9,997	14,917	19,710	24,421	29,225	34,561	39,160	43,682	48,364
	BUG Rating	B3-U0-G1	B3-U0-G2	B4-U0-G2	B4-U0-G2	B5-U0-G3	B5-U0-G3	B5-U0-G4	B5-U0-G4	B5-U0-G4	B5-U0-G4
5WQ	4000K/5000K Lumens	5,426	10,603	15,820	20,903	25,899	30,992	36,652	41,529	46,325	51,290
	3000K Lumens	5,130	10,025	14,958	19,763	24,486	29,302	34,654	39,263	43,799	48,493
	BUG Rating	B3-U0-G1	B4-U0-G2	B4-U0-G2	B5-U0-G3	B5-U0-G3	B5-U0-G4	B5-U0-G4	B5-U0-G4	B5-U0-G5	B5-U0-G5
SLL/SLR	4000K/5000K Lumens	4,528	8,846	13,199	17,440	21,609	25,858	30,580	34,649	38,651	42,792
	3000K Lumens	4,281	8,364	12,480	16,489	20,430	24,448	28,912	32,759	36,543	40,459
	BUG Rating	B1-U0-G2	B1-U0-G2	B2-U0-G3	B2-U0-G3	B2-U0-G4	B3-U0-G4	B3-U0-G5	B3-U0-G5	B3-U0-G5	B3-U0-G5
RW	4000K/5000K Lumens	5,265	10,289	15,353	20,285	25,134	30,077	35,569	40,303	44,958	49,775
	3000K Lumens	4,978	9,727	14,516	19,179	23,763	28,437	33,629	38,105	42,506	47,060
	BUG Rating	B2-U0-G1	B3-U0-G1	B3-U0-G2	B4-U0-G2	B4-U0-G2	B4-U0-G2	B5-U0-G3	B5-U0-G3	B5-U0-G3	B5-U0-G4
AFL	4000K/5000K Lumens	5,285	10,327	15,409	20,360	25,225	30,186	35,699	40,450	45,120	49,956
	3000K Lumens	4,996	9,763	14,569	19,249	23,849	28,540	33,752	38,244	42,659	47,232
	BUG Rating	B1-U0-G1	B1-U0-G1	B2-U0-G2	B2-U0-G2	B3-U0-G2	B3-U0-G3	B3-U0-G3	B3-U0-G3	B3-U0-G3	B3-U0-G3

* Nominal data for 70 CRI.

NOMINAL POWER LUMENS (600MA)

Number of Light Squares		1	2	3	4	5	6	7	8	9	10
Nominal Power (Watts)		34	66	96	129	162	193	226	257	290	323
Input Current @ 120V (A)		0.30	0.58	0.86	1.16	1.44	1.73	2.03	2.33	2.59	2.89
Input Current @ 208V (A)		0.17	0.34	0.49	0.65	0.84	0.99	1.14	1.30	1.48	1.63
Input Current @ 240V (A)		0.15	0.30	0.43	0.56	0.74	0.87	1.00	1.13	1.30	1.43
Input Current @ 277V (A)		0.14	0.28	0.41	0.52	0.69	0.81	0.93	1.04	1.22	1.33
Input Current @ 347V (A)		0.11	0.19	0.30	0.39	0.49	0.60	0.69	0.77	0.90	0.99
Input Current @ 480V (A)		0.08	0.15	0.24	0.30	0.38	0.48	0.53	0.59	0.71	0.77
Optics											
T2	4000K/5000K Lumens	4,121	8,055	12,019	15,881	19,676	23,547	27,847	31,552	35,196	38,967
	3000K Lumens	3,896	7,615	11,363	15,015	18,604	22,263	26,328	29,831	33,276	36,842
	BUG Rating	B1-U0-G1	B1-U0-G2	B2-U0-G2	B2-U0-G2	B3-U0-G3	B3-U0-G3	B3-U0-G4	B3-U0-G4	B3-U0-G4	B3-U0-G4
T2R	4000K/5000K Lumens	4,376	8,552	12,760	16,860	20,890	24,998	29,563	33,497	37,365	41,369
	3000K Lumens	4,138	8,085	12,064	15,941	19,751	23,635	27,951	31,670	35,328	39,113
	BUG Rating	B1-U0-G1	B1-U0-G2	B2-U0-G2	B2-U0-G2	B2-U0-G2	B3-U0-G3	B3-U0-G3	B3-U0-G4	B3-U0-G4	B3-U0-G4
T3	4000K/5000K Lumens	4,201	8,210	12,251	16,187	20,055	23,999	28,383	32,159	35,873	39,718
	3000K Lumens	3,973	7,763	11,583	15,304	18,961	22,691	26,835	30,406	33,916	37,552
	BUG Rating	B1-U0-G1	B1-U0-G2	B2-U0-G2	B2-U0-G3	B3-U0-G3	B3-U0-G4	B3-U0-G4	B3-U0-G4	B3-U0-G4	B3-U0-G5
T3R	4000K/5000K Lumens	4,294	8,393	12,523	16,546	20,501	24,532	29,014	32,875	36,671	40,600
	3000K Lumens	4,060	7,936	11,840	15,644	19,383	23,195	27,432	31,082	34,671	38,386
	BUG Rating	B1-U0-G1	B1-U0-G2	B2-U0-G2	B2-U0-G3	B2-U0-G3	B3-U0-G4	B3-U0-G4	B3-U0-G4	B3-U0-G5	B3-U0-G5
T4FT	4000K/5000K Lumens	4,226	8,257	12,321	16,280	20,172	24,139	28,547	32,346	36,082	39,948
	3000K Lumens	3,996	7,807	11,649	15,392	19,071	22,822	26,990	30,582	34,114	37,770
	BUG Rating	B1-U0-G1	B1-U0-G2	B2-U0-G2	B2-U0-G3	B2-U0-G4	B3-U0-G4	B3-U0-G4	B3-U0-G5	B3-U0-G5	B3-U0-G5
T4W	4000K/5000K Lumens	4,171	8,151	12,162	16,071	19,912	23,827	28,178	31,928	35,615	39,432
	3000K Lumens	3,943	7,706	11,498	15,194	18,825	22,527	26,642	30,187	33,673	37,281
	BUG Rating	B1-U0-G1	B2-U0-G2	B2-U0-G2	B2-U0-G3	B3-U0-G4	B3-U0-G4	B3-U0-G4	B3-U0-G5	B3-U0-G5	B3-U0-G5
SL2	4000K/5000K Lumens	4,114	8,041	11,998	15,854	19,643	23,506	27,799	31,498	35,135	38,901
	3000K Lumens	3,890	7,603	11,344	14,989	18,572	22,224	26,282	29,780	33,219	36,779
	BUG Rating	B1-U0-G1	B1-U0-G2	B2-U0-G3	B2-U0-G3	B3-U0-G3	B3-U0-G4	B3-U0-G4	B3-U0-G4	B3-U0-G4	B3-U0-G5
SL3	4000K/5000K Lumens	4,200	8,209	12,249	16,184	20,053	23,996	28,379	32,154	35,869	39,712
	3000K Lumens	3,972	7,762	11,580	15,302	18,960	22,688	26,831	30,400	33,913	37,546
	BUG Rating	B1-U0-G1	B1-U0-G2	B2-U0-G3	B2-U0-G3	B2-U0-G3	B3-U0-G4	B3-U0-G4	B3-U0-G4	B3-U0-G5	B3-U0-G5
SL4	4000K/5000K Lumens	3,992	7,799	11,638	15,378	19,053	22,801	26,964	30,552	34,081	37,733
	3000K Lumens	3,774	7,374	11,003	14,539	18,015	21,557	25,493	28,886	32,222	35,674
	BUG Rating	B1-U0-G2	B1-U0-G2	B1-U0-G3	B1-U0-G3	B2-U0-G4	B2-U0-G4	B2-U0-G4	B2-U0-G5	B2-U0-G5	B3-U0-G5
5NQ	4000K/5000K Lumens	4,333	8,467	12,634	16,694	20,683	24,751	29,271	33,166	36,996	40,961
	3000K Lumens	4,097	8,005	11,945	15,784	19,555	23,401	27,674	31,357	34,978	38,727
	BUG Rating	B2-U0-G1	B3-U0-G1	B3-U0-G1	B3-U0-G2	B4-U0-G2	B4-U0-G2	B4-U0-G2	B5-U0-G2	B5-U0-G3	B5-U0-G3
5MQ	4000K/5000K Lumens	4,413	8,622	12,867	17,000	21,064	25,207	29,810	33,777	37,677	41,715
	3000K Lumens	4,173	8,152	12,165	16,073	19,915	23,832	28,185	31,934	35,623	39,440
	BUG Rating	B3-U0-G1	B3-U0-G2	B4-U0-G2	B4-U0-G2	B4-U0-G2	B5-U0-G3	B5-U0-G3	B5-U0-G4	B5-U0-G4	B5-U0-G4
5WQ	4000K/5000K Lumens	4,424	8,646	12,900	17,046	21,120	25,274	29,890	33,866	37,778	41,826
	3000K Lumens	4,182	8,175	12,197	16,117	19,968	23,896	28,260	32,018	35,717	39,545
	BUG Rating	B3-U0-G1	B3-U0-G2	B4-U0-G2	B4-U0-G2	B5-U0-G3	B5-U0-G3	B5-U0-G4	B5-U0-G4	B5-U0-G4	B5-U0-G4
SLL/SLR	4000K/5000K Lumens	3,692	7,214	10,763	14,222	17,621	21,086	24,937	28,256	31,519	34,897
	3000K Lumens	3,491	6,820	10,176	13,447	16,660	19,937	23,577	26,715	29,800	32,994
	BUG Rating	B1-U0-G1	B1-U0-G2	B1-U0-G3	B2-U0-G3	B2-U0-G3	B2-U0-G4	B3-U0-G4	B3-U0-G4	B3-U0-G5	B3-U0-G5
RW	4000K/5000K Lumens	4,293	8,390	12,520	16,542	20,496	24,527	29,007	32,866	36,662	40,591
	3000K Lumens	4,059	7,932	11,837	15,640	19,378	23,189	27,425	31,074	34,662	38,377
	BUG Rating	B2-U0-G1	B3-U0-G1	B3-U0-G2	B4-U0-G2	B4-U0-G2	B4-U0-G2	B4-U0-G2	B5-U0-G3	B5-U0-G3	B5-U0-G3
AFL	4000K/5000K Lumens	4,310	8,421	12,566	16,602	20,571	24,616	29,112	32,986	36,795	40,738
	3000K Lumens	4,074	7,962	11,881	15,697	19,448	23,273	27,525	31,187	34,788	38,516
	BUG Rating	B1-U0-G1	B1-U0-G1	B2-U0-G2	B2-U0-G2	B2-U0-G2	B3-U0-G2	B3-U0-G3	B3-U0-G3	B3-U0-G3	B3-U0-G3

* Nominal data for 70 CRI.

CONTROL OPTIONS

0-10V (DIM)
This fixture is offered standard with 0-10V dimming driver(s). The DIM option provides 0-10V dimming wire leads for use with a lighting control panel or other control method.

Photocontrol (P, 4 and 4N7)
Optional button-type photocontrol (P) and photocontrol receptacles (4 and 4N7) provide a flexible solution to enable “dusk-to-dawn” lighting by sensing light levels. Advanced control systems compatible with NEMA 7-pin standards can be utilized with the 4N7 receptacle.

After Hours Dim (AHD)
This feature allows photocontrol-enabled luminaires to achieve additional energy savings by dimming during scheduled portions of the night. The dimming profile will automatically take effect after a “dusk-to-dawn” period has been calculated from the photocontrol input. Specify the desired dimming profile for a simple, factory-shipped dimming solution requiring no external control wiring. Reference the After Hours Dim supplemental guide for additional information.

Dimming Occupancy Sensor (MS/DIM-LXX, MS/X-LXX and MS-LXX)
These sensors are factory installed in the luminaire housing. When the MS/DIM-LXX sensor option is selected, the occupancy sensor is connected to a dimming driver and the entire luminaire dims when there is no activity detected. When activity is detected, the luminaire returns to full light output. The MS/DIM sensor is factory preset to dim down to approximately 50 percent power with a time delay of five minutes. The MS-LXX sensor is factory preset to turn the luminaire off after five minutes of no activity. The MS/X-LXX is also preset for five minutes and only controls the specified number of light engines to maintain steady output from the remaining light engines.

These occupancy sensors includes an integral photocell that can be activated with the FSIR-100 accessory for “dusk-to-dawn” control or daylight harvesting - the factory preset is OFF. The FSIR-100 is a wireless tool utilized for changing the dimming level, time delay, sensitivity and other parameters.

A variety of sensor lens are available to optimize the coverage pattern for mounting heights from 8’-40’.

For mounting heights up to 8' (-L08 - Cutoff 8' to 24')

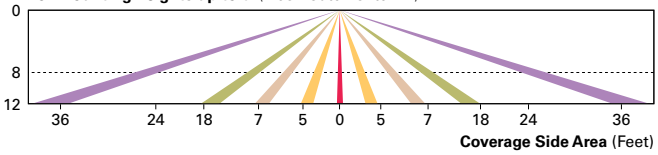

For mounting heights up to 20' (-L20)

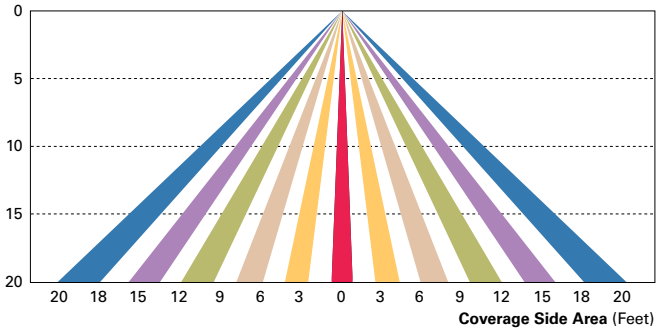

For mounting heights up to 40' (-L40)

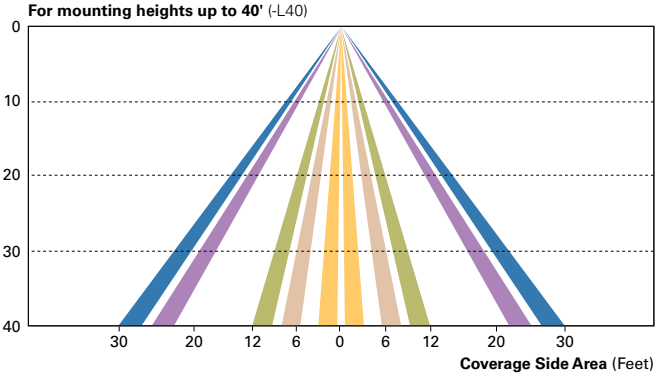

For mounting heights up to 40' (-L40W)

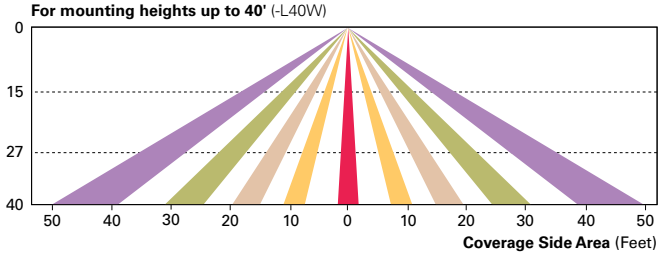

LumaWatt Pro Wireless Control and Monitoring System (LWR-LW and LWR-LN)
The LumaWatt Pro system is a peer-to-peer wireless network of luminaire-integral sensors for any sized project. Each sensor is capable of motion and photo sensing, metering power consumption and wireless communication. The end-user can securely create and manage sensor profiles with browser-based management software. The software will automatically broadcast to the sensors via wireless gateways for zone-based and individual luminaire control. The LumaWatt Pro software provides smart building solutions by utilizing the sensor to provide easy-to-use dashboard and analytic capabilities such as improved energy savings, traffic flow analysis, building management software integration and more.

For additional details, refer to the LumaWatt Pro product guides.

For mounting heights from 8' to 16' (LWR-LW)

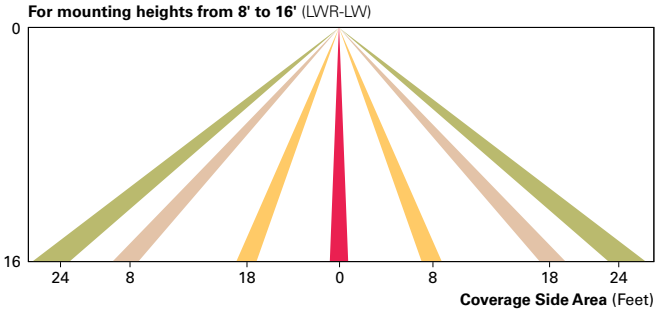

For mounting heights from 16' to 40' (LWR-LN)

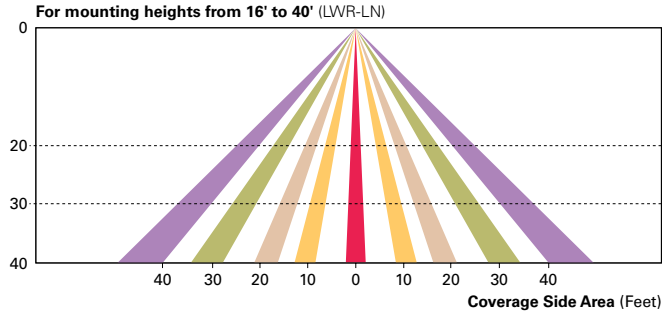

Eaton
1121 Highway 74 South
Peachtree City, GA 30269
P: 770-486-4800
www.eaton.com/lighting

ORDERING INFORMATION

Sample Number: GAN-AF-04-LED-U-T4FT-AP-ADJS

Product Family [1]	Light Engine	Number of Light Squares [2]	Lamp Type	Voltage	Distribution	Color	Mounting
GAN=Galleon	**AF**=1A Drive Current	**01**=1 **02**=2 **03**=3 **04**=4 **06**=6 **07**=7 **08**=8 **09**=9 **10**=10	**LED**=Solid State Light Emitting Diodes	**U**=Universal (120-277V) **8**=480V [3, 4] **9**=347V [3]	**T2**=Type II **T2R**=Type II Roadway **T3**=Type III **T3R**=Type III Roadway **T4FT**=Type IV Forward Throw **T4W**=Type IV Wide **5NQ**=Type V Narrow **5MQ**=Type V Square Medium **5WQ**=Type V Square Wide **SL2**=Type II w/Spill Control **SL3**=Type III w/Spill Control **SL4**=Type IV w/Spill Control **SLL**=90° Spill Light Eliminator Left **SLR**=90° Spill Light Eliminator Right **RW**=Rectangular Wide Type I **AFL**=Automotive Frontline	**AP**=Grey **BZ**=Bronze **BK**=Black **DP**=Dark Platinum **GM**=Graphite Metallic **WH**=White	**ADJA**=Adjustable Arm - Direct Pole Mount [5] **ADJS**=Adjustable Arm - Slipfitter [5] **ADJA-WM**=Adjustable Arm - Direct Pole Mount and Wall Mount Adapter [5]

Options (Add as Suffix)	**Accessories** (Order Separately)
2L=Two Circuits [6, 7] **7030**=70 CRI 3000K [8] **8030**=80 CRI 3000K [8] **7050**=70 CRI 5000K [8] **7060**=70 CRI 6000K [8] **600**=Drive Current Factory Set to 600mA [9] **800**=Drive Current Factory Set to 800mA [9] **1200**=Drive Current Factory Set to 1200mA [9, 10] **DIM**=External 0-10V Dimming Leads **3**=Three-Position Terminal Block **P**=Button Type Photocontrol (120, 208, 240 or 277V. Must Specify Voltage) **4**=NEMA Twistlock Photocontrol Receptacle **4N7**=NEMA 7-PIN Twistlock Photocontrol Receptacle **AHD145**=After Hours Dim, 5 Hours [11] **AHD245**=After Hours Dim, 6 Hours [11] **AHD255**=After Hours Dim, 7 Hours [11] **AHD355**=After Hours Dim, 8 Hours [11] **HA**=50°C High Ambient [11] **MS/DIM-L08**=Motion Sensor for Dimming Operation, Maximum 8' Mounting Height [13, 14, 15] **MS/DIM-L20**=Motion Sensor for Dimming Operation, 9' - 20' Mounting Height [13, 14, 16] **MS/DIM-L40**=Motion Sensor for Dimming Operation, 21' - 40' Mounting Height [13, 14, 17] **MS/DIM-L40W**=Motion Sensor for Dimming Operation, 21' - 40' Mounting Height (Wide Range) [13, 14, 18] **MS/X-L08**=Bi-Level Motion Sensor, Maximum 8' Mounting Height [13, 14, 15] **MS/X-L20**=Bi-Level Motion Sensor, 9' - 20' Mounting Height [13, 14, 16] **MS/X-L40**=Bi-Level Motion Sensor, 21' - 40' Mounting Height [13, 14, 17, 19] **MS/X-L40W**=Bi-Level Motion Sensor, 21' - 40' Mounting Height (Wide Range) [13, 14, 18, 19] **MS-L08**=Motion Sensor for ON/OFF Operation, Maximum 8' Mounting Height [12, 13, 14, 15, 16] **MS-L20**=Motion Sensor for ON/OFF Operation, 9' - 20' Mounting Height [13, 14, 15] **MS-L40**=Motion Sensor for ON/OFF Operation, 21' - 40' Mounting Height [13, 14, 17] **MS-L40W**=Motion Sensor for ON/OFF Operation, 21' - 40' Mounting Height (Wide Range) [13, 14, 18] **LWR-LW**=LumaWatt Wireless Sensor, Wide Lens for 8' - 16' Mounting Height [13, 20] **LWR-LN**=LumaWatt Wireless Sensor, Narrow Lens for 16' - 40' Mounting Height [13, 20] **MT**=Factory Installed Mesh Top **TH**=Tool-less Door Hardware **LCF**=Light Square Trim Plate Painted to Match Housing [21] **HSS**=Factory Installed House Side Shield [22]	**OA/RA1016**=NEMA Photocontrol Multi-Tap - 105-285V **OA/RA1027**=NEMA Photocontrol - 480V **OA/RA1201**=NEMA Photocontrol - 347V **OA/RA1013**=Photocontrol Shorting Cap **OA/RA1014**=120V Photocontrol **SA1252**=10kV Surge Module Replacement **SA1036-XX**=Single Tenon Adapter for 2-3/8" O.D. Tenon **SA1037-XX**=2@180° Tenon Adapter for 2-3/8" O.D. Tenon **SA1197-XX**=3@120° Tenon Adapter for 2-3/8" O.D. Tenon **SA1188-XX**=4@90° Tenon Adapter for 2-3/8" O.D. Tenon **SA1189-XX**=2@90° Tenon Adapter for 2-3/8" O.D. Tenon **SA1190-XX**=3@90° Tenon Adapter for 2-3/8" O.D. Tenon **SA1191-XX**=2@120° Tenon Adapter for 2-3/8" O.D. Tenon **SA1038-XX**=Single Tenon Adapter for 3-1/2" O.D. Tenon **SA1039-XX**=2@180° Tenon Adapter for 3-1/2" O.D. Tenon **SA1192-XX**=3@120° Tenon Adapter for 3-1/2" O.D. Tenon **SA1193-XX**=4@90° Tenon Adapter for 3-1/2" O.D. Tenon **SA1194-XX**=2@90° Tenon Adapter for 3-1/2" O.D. Tenon **SA1195-XX**=3@90° Tenon Adapter for 3-1/2" O.D. Tenon **FSIR-100**=Wireless Configuration Tool for Occupancy Sensor [14] **GAN-MT1**=Field Installed Mesh Top for 1-4 Light Squares **GAN-MT2**=Field Installed Mesh Top for 5-6 Light Squares **GAN-MT3**=Field Installed Mesh Top for 7-8 Light Squares **GAN-MT4**=Field Installed Mesh Top for 9-10 Light Squares **LS/HSS**=Field Installed House Side Shield [22, 23]

NOTES:

1. DesignLights Consortium® Qualified. Refer to www.designlights.org Qualified Products List under Family Models for details.
2. Standard 4000K CCT and minimum 70 CRI.
3. Requires the use of a step down transformer when combined with MS/DIM, MS/X or LWR. Not available with sensor at 1200mA. Not available in combination with the HA high ambient and sensor options at 1A.
4. Only for use with 480V Wye systems. Per NEC, not for use with ungrounded systems, impedance grounded systems or corner grounded systems (commonly known as Three Phase Three Wire Delta, Three Phase High Leg Delta and Three Phase Corner Grounded Delta systems).
5. Not intended for tilt angles greater than 60° from horizontal.
6. 2L is not available with MS, MS/X or MS/DIM at 347V or 480V. 2L in AF-02 through AF-04 requires a larger housing, normally used for AF-05 or AF-06.
7. Not available with LumaWatt wireless sensors.
8. Extended lead times apply. Use dedicated IES files for 3000K, 4000K, 5000K and 6000K when performing layouts. These files are published on the Galleon LED Flood luminaire product page on the website.
9. 1 Amp standard. Use dedicated IES files for 600mA 800mA and 1200mA when performing layouts. These files are published on the Galleon LED Flood luminaire product page on the website.
10. Not available with HA option.
11. Requires the use of P photocontrol or the 4N7 photocontrol receptacle with photocontrol accessory. See After Hours Dim supplemental guide for additional information.
12. 50°C lumen maintenance applies to 600mA, 800mA and 1A drive currents.
13. Not recommended for applications when the luminaire is tilted more than 10° from horizontal. Consult your lighting representative at Eaton for more information.
14. The FSIR-100 configuration tool is required to adjust parameters including high and low modes, sensitivity, time delay, cutoff and more. Consult your lighting representative at Eaton for more information.
15. Approximately 22' detection diameter at 8' mounting height.
16. Approximately 40' detection diameter at 20' mounting height.
17. Approximately 60' detection diameter at 40' mounting height.
18. Approximately 100' detection diameter at 40' mounting height.
19. Replace X with number of Light Squares operating in low output mode.
20. LumaWatt wireless sensors are factory installed, requiring network components RF-EM-1, RF-GW-1 and RF-ROUT-1 in appropriate quantities. See www.eaton.com/lighting for LumaWatt application information.
21. Not available with house side shield (HSS).
22. Only for use with SL2, SL3, SL4 and AFL distributions. The Light Square trim plate is painted black when the HSS option is selected
23. One required for each Light Square.

Streetworks

DESCRIPTION

The Archeon™ Medium LED roadway luminaire delivers all the performance benefits of the latest Eaton LED platforms and technologies with a modern, yet familiar cobrahead form factor. This discrete LED solution with the patented, high-efficiency AccuLED Optics™ system, provides uniform and energy conscious illumination for municipal streets and highways. Our customer focused features include single latch tool-less entry, industry leading surge protection options and superior lumen maintenance and performance, all in an economical design. Available in 13 standard lumen packages per optic.

Catalog #	ARCH-M-AF48-40-D-U-T3-4N7-AP	**Type**
Project	Centennial Park - Nassau County	
Comments		**Date**
Prepared by	Topinka & D'Angelo, Inc.	June 2020

SPECIFICATION FEATURES

Construction
Heavy-duty die-cast aluminum housing and door. Tool-less entry, hinged removable door for easy access to terminal block, mounting bolts, and optional surge module. 3G vibration rated.

Optics
Choice of four patented, high-efficiency AccuLED Optics . Available in Type IIR, III, IV wide and V square wide the optics are precisely designed to shape the distribution maximizing efficiency and application spacing. Offered standard in 4000K (+/- 275K) CCT and minimum 70 CRI. Optional 2700K (80 CRI), 3000K (70 CRI), 5000K (70 CRI) CCT are available. For the ultimate level of spill light control, an optional house side shield accessory is available and can be field or factory installed. The house side shield is designed to seamlessly integrate with the T2R, T3, and T4W optics. Optics are IP66 enclosure rated.

Electrical
120-277V 50/60Hz, 347V 60Hz or 480V 60Hz operation. Standard 0-10V dimming with 6kV/3kA and 10kV/10kA common- and differential- mode surge protection available. Thermal management transfers heat away from the LED source for optimal efficiency, light output and lumen maintenance. Ambient operating temperature from -40°C to 40°C; 50°C HA, high ambient, capability available. Standard with three-position tunnel type compression terminal block. Greater than 90% lumen maintenance expected at 50,000 hours.

Mounting
Standard four-bolt/two-bracket slipfitter with cast-in pipe stop and 2.5° leveling steps, and door tether. Fixed-in-place bird guard seals around 1-1/4" to 2" (1-5/8" to 2-3/8" O.D.) mounting arms. Optional 15" pole mount arm available with round pole adapter and mounting hardware included.

Finish
Housing and cast parts finished in five-stage super TGIC polyester powder coat paint, 2.5 mil nominal thickness for superior protection against fade and wear. Consult your lighting representative at Eaton for a complete selection of standard colors.

Warranty
Standard five-year warranty. Optional ten-year warranty, please see your Eaton Streetworks sales representative for more information.

ARCH-M
ARCHEON
MEDIUM

LED

ROADWAY LUMINAIRE

DIMENSIONS

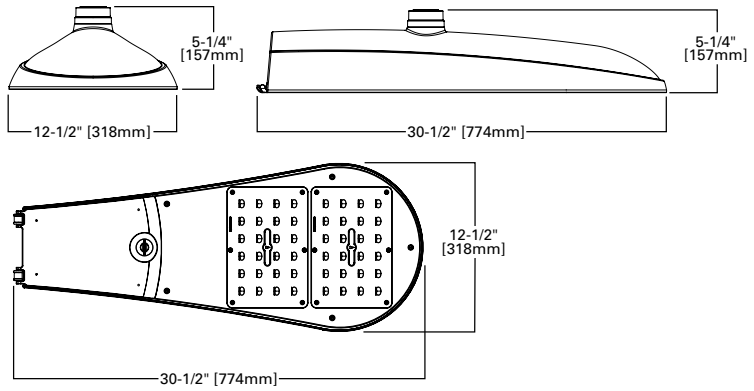

OPTIONAL ARM

15" Straight Arm

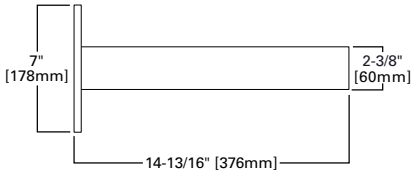

Adjustable Slipfitter Offset Arm

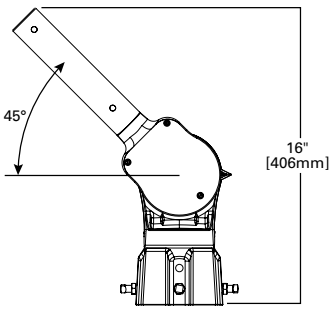

TYPE "M" - Drilling Pattern

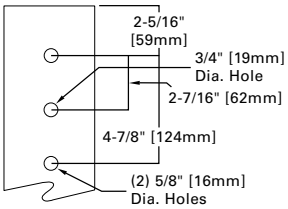

CERTIFICATION DATA
UL and cUL Wet Location Listed
IP66-Rated Optics
3G Vibration Rated
ISO 9001
DesignLights Consortium® Qualified*
Dark Sky Approved (3000K CCT and warmer only)

ENERGY DATA
Electronic LED Driver
0.9 Power Factor
<20% Total Harmonic Distortion
120-277V 50/60Hz
-40°C Minimum Temperature Rating
+40°C Ambient Temperature Rating

EPA
Effective Projected Area (Sq. Ft.): 0.71

SHIPPING DATA
Approximate Net Weight:
18 lbs. (8.16 kgs.)

POWER AND LUMENS

Light Engine - AF48*		AF48-40	AF48-50	AF48-60	AF48-70	AF48-80	AF48-90	AF48-100	AF48-110	AF48-120	AF48-130	AF48-140	AF48-150	AF48-160
Power (Watts)		38	48	63	73	83	92	101	111	122	131	141	151	161
Wattage Label		40	50	60	70	80	90	100	110	120	130	140	150	160
Current (A) **@ 120V**		0.318	0.399	0.527	0.609	0.693	0.768	0.846	0.925	1.020	1.100	1.180	1.260	1.340
Current (A) **@ 277V**		0.145	0.178	0.243	0.275	0.309	0.342	0.374	0.407	0.453	0.486	0.518	0.553	0.586
Current (A) **@ 347V**		--	--	0.188	0.216	0.245	0.271	0.298	0.325	0.371	0.400	0.428	0.458	0.487
Current (A) **@ 480V**		--	--	0.146	0.165	0.185	0.203	0.222	0.240	0.286	0.304	0.323	0.344	0.363
Optics														
T2R	4000K/5000K	5,586	6,941	8,982	10,237	11,449	12,667	13,709	14,663	15,735	16,624	17,490	18,356	19,102
	BUG Rating	B1-U0-G1	B1-U0-G2	B1-U0-G2	B2-U0-G2	B2-U0-G2	B2-U0-G2	B2-U0-G2	B2-U0-G2	B2-U0-G2	B2-U0-G3	B2-U0-G3	B2-U0-G3	B2-U0-G3
	3000K	5,283	6,562	8,492	9,678	10,824	11,976	12,960	13,864	14,877	15,717	16,536	17,355	18,059
	BUG Rating	B1-U0-G1	B1-U0-G2	B1-U0-G2	B1-U0-G2	B2-U0-G2	B2-U0-G2	B2-U0-G2	B2-U0-G2	B2-U0-G2	B2-U0-G2	B2-U0-G3	B2-U0-G3	B2-U0-G3
T3	4000K/5000K	5,552	6,898	8,925	10,172	11,377	12,587	13,623	14,571	15,637	16,520	17,381	18,241	18,982
	BUG Rating	B1-U0-G2	B1-U0-G2	B2-U0-G2	B2-U0-G2	B2-U0-G2	B2-U0-G2	B2-U0-G3	B2-U0-G3	B2-U0-G3	B2-U0-G3	B3-U0-G3	B3-U0-G3	B3-U0-G3
	3000K	5,249	6,522	8,438	9,618	10,757	11,902	12,880	13,777	14,784	15,619	16,434	17,247	17,947
	BUG Rating	B1-U0-G2	B1-U0-G2	B2-U0-G2	B2-U0-G2	B2-U0-G2	B2-U0-G2	B2-U0-G2	B2-U0-G3	B2-U0-G3	B2-U0-G3	B2-U0-G3	B3-U0-G3	B3-U0-G3
T4W	4000K/5000K	5,523	6,862	8,878	10,120	11,318	12,523	13,552	14,496	15,556	16,435	17,291	18,147	18,884
	BUG Rating	B1-U0-G2	B1-U0-G2	B2-U0-G3	B2-U0-G3	B2-U0-G3	B2-U0-G3	B2-U0-G3	B3-U0-G3	B3-U0-G3	B3-U0-G3	B3-U0-G3	B3-U0-G4	B3-U0-G4
	3000K	5,222	6,488	8,394	9,568	10,701	11,839	12,813	13,706	14,707	15,538	16,349	17,157	17,854
	BUG Rating	B1-U0-G2	B1-U0-G2	B2-U0-G3	B2-U0-G3	B2-U0-G3	B2-U0-G3	B2-U0-G3	B2-U0-G3	B3-U0-G3	B3-U0-G3	B3-U0-G3	B3-U0-G3	B3-U0-G3
5WQ	4000K/5000K	5,698	7,079	9,159	10,440	11,676	12,919	13,981	14,955	16,048	16,954	17,838	18,721	19,481
	BUG Rating	B3-U0-G1	B3-U0-G2	B4-U0-G2	B4-U0-G2	B4-U0-G2	B4-U0-G2	B4-U0-G3	B4-U0-G3	B4-U0-G3	B4-U0-G3	B5-U0-G3	B5-U0-G3	B5-U0-G3
	3000K	5,388	6,693	8,660	9,871	11,040	12,214	13,218	14,139	15,173	16,029	16,865	17,700	18,419
	BUG Rating	B3-U0-G1	B3-U0-G2	B4-U0-G2	B4-U0-G2	B4-U0-G2	B4-U0-G2	B4-U0-G3	B4-U0-G3	B4-U0-G3	B4-U0-G3	B4-U0-G3	B5-U0-G3	B5-U0-G3
T2U	4000K/5000K	5,519	6,857	8,872	10,113	11,310	12,513	13,542	14,485	15,544	16,422	17,278	18,133	18,869
	3000K	5,218	6,482	8,388	9,561	10,692	11,831	12,803	13,695	14,696	15,527	16,335	17,144	17,840
	BUG Rating	B2-U0-G2	B2-U0-G2	B2-U0-G2	B3-U0-G3	B3-U0-G3	B3-U0-G3	B3-U0-G3	B3-U0-G3	B3-U0-G3	B3-U0-G3	B3-U0-G3	B3-U0-G3	B3-U0-G3

LUMEN MAINTENANCE

Light Engine	Ambient Temperature	TM-21 Lumen Maintenance (60,000 Hours)	Theoretical L70 (Hours)
AF48-40 to AF48-160	Up to 50°C	>95%	416,000

LUMEN MULTIPLIER

Ambient Temperature	0°C	10°C	25°C	40°C	50°C
Lumen Multiplier	1.02	1.01	1.00	0.99	0.97

CONTROL OPTIONS

Photocontrol (4 and 4N7)
Photocontrol receptacles (4 and 4N7) provide a flexible solution to enable “dusk-to-dawn” lighting by sensing light levels. Advanced control systems compatible with ANSI C136.41 7-pin standards can be utilized with the 4N7 receptacle.

Dimming Occupancy Sensor (MS/DIM-LXX)
These sensors are factory installed in the luminaire housing. When the MS/DIM-LXX sensor option is selected, the occupancy sensor is connected to a dimming driver and the entire luminaire dims when there is no activity detected. When activity is detected, the luminaire returns to full light output. The MS/DIM sensor is factory preset to dim down to approximately 50 percent power with a time delay of five minutes. These occupancy sensors include an integral photocell that can be activated with the FSIR-100 accessory for “dusk-to-dawn” control or daylight harvesting - the factory preset is OFF. The FSIR-100 is a wireless tool utilized for changing the dimming level, time delay, sensitivity and other parameters.
A variety of sensor lens are available to optimize the coverage pattern for mounting heights from 8' - 40'.

LumaWatt Pro Wireless Control and Monitoring (LWR-LW and LWR-LN)
Eaton’s LumaWatt Pro powered by Enlighted is a connected lighting solution that combines a broad selection of energy-efficient LED luminaires with a powerful integrated wireless sensor system. The sensor controls the lighting system in compliance with the latest energy codes and collects valuable data about building performance and use. Software applications turn the granular data into information through energy dashboards and specialized apps that make it simple and help optimize the use of building resources, beyond lighting. For additional details, refer to the LumaWatt Pro product guides.

ORDERING INFORMATION

Sample Number: ARCH-M-AF48-40-D-U-T2R-4N7-AP

Product Family [1, 2]	Light Engine [3]	Wattage Bucket [4]	Driver	Voltage	Distribution	Options (Add as Suffix)	Color
ARCH-M=Archeon Medium	**AF48**	**40**=40W **50**=50W **60**=60W **70**=70W **80**=80W **90**=90W **100**=100W **110**=110W **120**=120W **130**=130W **140**=140W **150**=150W **160**=160W	**D**=Dimming (0-10V) **5LTD**=DALI [5]	**U**=Universal (120-277V) **8**=480V [6, 7] **9**=347V [6]	**T2R**=Type II Roadway **T2U**=Type II Urban **T3**=Type III **T4W**=Type IV Wide **5WQ**=Type V Square Wide	**7027**=70 CRI / 2700K [8] **7030**=70 CRI / 3000K [8] **7050**=70 CRI / 5000K [8] **8027**=80 CRI / 2700K [8, 9] **4**=NEMA 3-PIN Twistlock Photocontrol Receptacle [10] **4N7**=NEMA 7-PIN Twistlock Photocontrol Receptacle **10K**=10kV UL 1449 Surge Protective Device **10MSP**=10kV MOV Surge Protective Device **MS/DIM-L08**=Motion Sensor for Dimming Operation, Maximum 8' Mounting Height [11, 12] **MS/DIM-L20**=Motion Sensor for Dimming Operation, 9' - 20' Mounting Height [11, 12] **MS/DIM-L40**=Motion Sensor for Dimming Operation, 21' - 40' Mounting Height [11, 12] **K**=Level Indicator **LWR-LW**=LumaWatt Pro Wireless Sensor, Wide Lens for 8' - 16' Mounting Heights [11, 13, 14] **LWR-LN**=LumaWatt Pro Wireless Sensor, Narrow Lens for 16' - 40' Mounting Heights [11, 13, 14] **HA**=50°C High Ambient Temperature [15] **HS-ARCH**=Factory Install ARCH House Side Shield [16] **A15**=Arm Included (15" Straight Arm) [17] **IP66**=IP66 Rated Housing **ASJS15**=Adjustable slipfitter (Factory set at 15 degrees) **ASJS25**=Adjustable slipfitter (Factory set at 25 degrees) **ASJS45**=Adjustable slipfitter (Factory set at 45 degrees)	**AP**=Grey (Standard) **BZ**=Bronze **BK**=Black **DP**=Dark Platinum **GM**=Graphite Metallic **WH**=White

Accessories (Order Separately)

OA/RA1013=Photocontrol Shorting Cap
OA1223=10kV Surge Module Replacement
HS-ARCH=Field Install ARCH House Side Shield [16, 18]
OA/RA1014=NEMA Photocontrol - 120V
OA/RA1016=NEMA Photocontrol - Multi-Tap
ASJS15-XX=Adjustable slipfitter (Factory set at 15 degrees) [19]
ASJS25-XX=Adjustable slipfitter (Factory set at 25 degrees) [19]
ASJS45-XX=Adjustable slipfitter (Factory set at 45 degrees) [19]
OA/RA1027=NEMA Photocontrol - 480V
OA/RA1201=NEMA Photocontrol - 347V
A15-XX=Arm (15" Straight Arm) [17, 19]
FSIR-100=Wireless Configuration Tool for Occupancy Sensor [20]

NOTES:

1. Customer is responsible for engineering analysis to confirm pole and fixture compatibility for all applications. Refer to our white paper WP513001EN for additional support information.
2. DesignLights Consortium® Qualified. Refer to www.designlights.org Qualified Products List under Family Models for details.
3. Standard 4000K CCT and 70 CRI.
4. Nominal wattage values will be labeled on fixture as per ANSI C136.15. For specific fixture wattage, refer to Power and Lumens table.
5. Only available in universal voltage.
6. Not available at 40W or 50W.
7. Only for use with 480V Wye systems. Per NEC, not for use with ungrounded systems, impedance grounded systems or corner grounded systems (commonly known as Three Phase Three Wire Delta, Three Phase High Leg Delta and Three Phase Corner Grounded Delta systems).
8. Use dedicated IES files for 2700K, 3000K and 5000K when performing layouts. These files are published on the Archeon medium luminaire product page on the website.
9. Extended lead times may apply.
10. If "4" selected, dimming functionality not available. Dimming leads will be capped.
11. Only available in Universal voltage.
12. The FSIR-100 accessory is required to adjust parameters.
13. LumaWatt Pro wireless system is not available with photocontrol receptacle (not required)
14. LumaWatt Pro wireless sensors are factory installed and require network components LWP-EM-1, LWP-GW-1, and LWP-PoE8 in appropriate quantities. See website for LumaWatt Pro application information.
15. HA option not available with the following configurations, 347/480V 150W and 160W if paired with HS-ARCH or 5TLD 140-160W.
16. HS-ARCH not available with 5WQ distribution.
17. Round pole adapter and mounting hardware included. "M" drill pattern.
18. Archeon Medium requires two house side shields.
19. Replace XX with color designation.
20. This tool enables adjustment of parameters including high and low modes, sensitivity, time delay, cutoff and more. Consult your lighting representative at Eaton for more information.

Cooper Lighting Solutions
1121 Highway 74 South
Peachtree City, GA 30269
P: 770-486-4800
www.eaton.com/lighting

Canada Sales
5925 McLaughlin Road
Mississauga, Ontario L5R 1B8
P: 905-501-3000
F: 905-501-3172

enduro
SPECIAL APPLICATIONS

4" SQUARE TAMPER RESISTANT
OS SERIES / 4500 LUMENS MAX

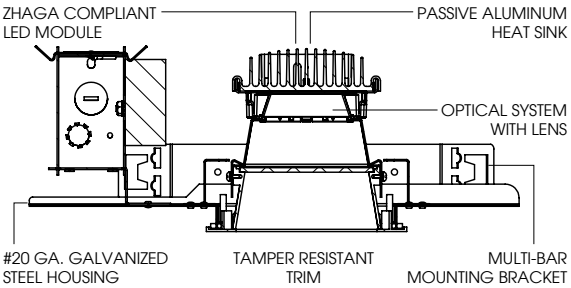

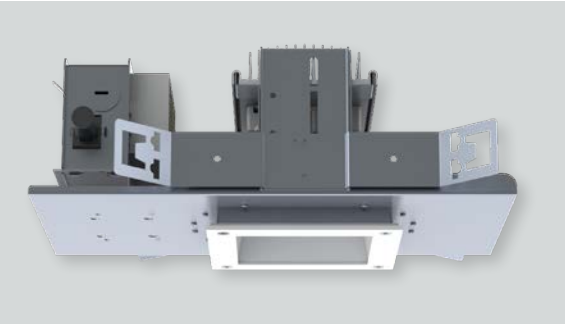

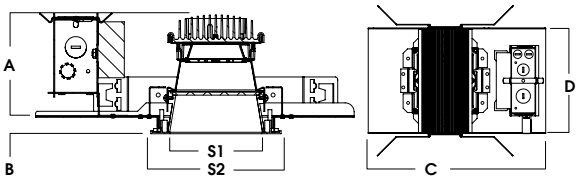

A	B	C	D	S1	S2
4.3 109.2 mm	0.625 15.9 mm	13.3 337.8 mm	7.9 200.7 mm	3.8 96.5 mm	5.6 142.2 mm

SGTP4SQLEDOS - TRIM FLANGE / NON-IC RATED

APPLICATION

4" LED Recessed Tamper Resistant downlight.

FEATURES

Tamper Resistant hardware with stainless steel bezel and flush lens. Captive stainless hardware. Polycarbonate underlay option for impact resistance (PC). Lens is silicone sealed to prevent dust or moisture from entering optical chamber. Two-stage optical system for smooth light distribution. Zhaga International Standard LED module for ease of maintenance and replacement. Tool-less LED module, driver and J-Box access. Multi-Bar mounting brackets. BH27 Standard mounting bars included. Posi-lock trim retention torsion springs. Integral 0.625" collar.

TRIM FINISH

A variety of architectural powdercoat and anodized finishes are available.

ELECTRONICS

LED module features high brightness white Osram LEDs. 3-step MacAdam Ellipse binning and CRI 84 minimum. Full range of electronic 120V/277V and dimming drivers.

CONSTRUCTION

Housing/frame constructed of #20 ga. galvanized steel to resist corrosion. Stainless steel bezel finished to specification. Passive machined aluminum heatsink.

CODE COMPLIANCE

BAA Compliant. Non-IC rated. ETL certified to meet US and Canadian standards. Suitable for dry or damp locations.Optional Wet location. LM79/LM80/TM21 data available. Manufactured and tested to UL standards No. 1598/8750.

WATTAGE TO LUMENS UPDATE					
CURRENT PART NUMBER EXAMPLE	PREVIOUS PART NUMBER EXAMPLE	SOURCE LUMENS[1]	DELIVERED LUMENS[2]	SYSTEM WATTS	LPW
SGE4SQLEDOS10L	SGE4SQLEDOS14W	1100	803	11	77
SGE4SQLEDOS15L	N/A	1500	1059	13	80
SGE4SQLEDOS20L	SGE4SQLEDOS25W	2000	1705	20	84
SGE4SQLEDOS30L	SGE4SQLEDOS35W	3000	2344	28	85
SGE4SQLEDOS45L	N/A	4500	3464	41	84

SERIES	LUMENS[1]		CCT		DRIVER / DIMMING / VOLTAGE[3]				OPTIONS[4]	
SGTP4SQLEDOS	10L	1100 Lm	27K	2700K	E_	Electronic Driver	1	120V	BH27[5]	27" Solid Bars
	15L	1500 Lm	30K	3000K	DS10_	10%, 0-10V	2	277V	H12	12" - 24" Expandable Bars
	20L	2000 Lm	35K	3500K	DO10_	1%, 0-10V			H06	6" - 12" Expandable Bars
	30L	3000 Lm	40K	4000K	DS2W1	1%, ELV/MLV, 120V			CB24	24" C-Channel Bars
	45L	4500 Lm			DLTE1	1% Lutron® 2-Wire Forward Phase, 120V			FS	Fusing
									EB	Fixture Painted Black
					DL3E_	1% Lutron® EcoSystem®, Fade			CR	Corrosion Resistant
					EL10_	1%, eldoLED			PR[6]	Deep Ceiling Extension
					ED01_	0.1%, eldoLED			GR	Goof Ring
					DALI_	DALI Control			ZIG[7]	ZigBee Module
									BLU[7]	Bluetooth LE
									EM[8]	7W Emergency Battery Test Switch Remote
									AMB	Anti-Microbial Finish

TRIM	FINISH[5]		OPTIONS	
TP0244OSMW[9]	MW[10]	Matte White	SO[12]	Micro Prism Solite™ Lens
	MB	Matte Black	FG	Frosted Glass Lens
	SS	Brushed Stainless Steel	FO90	White Optic Lens
	BA	Brushed Aluminum	AMB	Anti-Microbial Finish
	CRO	Chrome Plated		
	GA	Galvanized	ADDITIONAL OPTIONS	
	BZ	Bronze	PC[13]	0.125" Polycarb Underlay for Impact Resistance
	OB	Oil Rubbed Bronze		
	PT	Platinum Silver		
	CH	Charcoal	GS	Gasket
	GH	Graphite	WL	Wet Location
	SN	Sun Gold	PF[14]	Polished Flange
	CO	Copper Metallic		
	CC[11]	Custom Color		

EXAMPLE: SGTP4SQLEDOS20L35KE1/TP0244OSMWSOPC

NOTES:
1 Nominal Source Lumens at 35K **2** Nominal Delivered Lumens at 35K with MW-SO **3** Contact Factory for Additional Options **4** See Product Options Page for Details **5** Standard Bar Hangers **6** Contact Factory **7** Order DS101/2 When Specifying ZIG or BLU **8** Standard EM **9** Matte White Reflector **10** Standard Finish **11** Contact Factory for Special Finishes **12** Standard Lens **13** Supplied **14** Flange and Reflector Same Finish

SPECTRUM LIGHTING INC.

PROJECT:

TYPE:

Dimensions and values shown are nominal. Spectrum Lighting continually works to improve products and reserves the right to make changes which may alter the performance or appearance of products.

JOB _____

TYPE _____

CATALOG # _____

VWBTLED SERIES

DRY/DAMP/WET LOCATION LED LUMINAIRE WITH FLAT BOARD TRAY

APPLICATION

- WET LOCATION LISTED LED FIXTURE FOR USE IN DUST, MOISTURE OR CORROSIVE ENVIRONMENTS.
- WELL SUITED FOR FOOD PROCESSING, PARKING GARAGES, CAR WASHES, EXTERIOR RETAIL AREAS, TRANSPORTATION FACILITIES, TUNNELS AND UNDERPASSES, REFRIGERATED STORAGE, MARINAS, AND PROCESSING PLANTS WITH ADVERSE ENVIRONMENTS.

CONSTRUCTION

- ONE PIECE IMPACT-RESISTANT, FIBERGLASS REINFORCED POLYESTER HOUSING.
- POURED IN PLACE POLYURETHANE GASKET AND POLCARBONATE LATCHES PROVIDE POSITIVE CONTACT AND SEAL THE ENCLOSURE.
- RIBBED POLYCARBONATE (FPR), RIBBED ACRYLIC (FAR) LENSES AVAILABLE (SEE ORDERING GUIDE).

FINISH

- ALL EXPOSED METAL PARTS PRETREATED WITH A PHOSPHATE BONDING PROCESS AND POST-PAINTED WITH AN ELECTROSTATICALLY APPLIED HIGH TEMPERATURE BAKED WHITE ENAMEL FOR SUPERIOR QUALITY AND DURABILITY.

ELECTRICAL

- FULL METAL GEAR-TRAY SIMPLIFIES ASSEMBLY, CARRIES ALL ELECTRICAL COMPONENTS AND PROVIDES A MEANS OF POSITIVE GROUNDING.
- LISTED
- SUITABLE FOR DRY/DAMP/WET LOCATIONS AND CERTIFIED FOR IP65, IP66, IP67 APPLICATIONS.
- I.B.E.W. LABELED.
- NEMA 4X.
- 5 YEAR LIMITED WARRANTY ON LED BOARDS & DRIVERS.
- L85 AT 50,000 HOURS.
- 0-10V DIMMING STANDARD*
- MINIMUM -30C/-22F AMBIENT ENVIRONMENTS (EXCLUDING EMERGENCY/BATTERY EQUIPPED LUMINAIRES)
- LUMEN/WATTAGE TUNING AVAILABLE. *(CONTACT FACTORY FOR OPTIONS)*
- DRIVER QUICK DISCONNECT STANDARD WHERE REQUIRED BY CODE.
- 80+ CRI STD. CONSULT FACTORY FOR 90 CRI LUMEN PACKAGE OPTIONS.

CERTAIN VERSIONS DLC QUALIFIED. CHECK WWW.DESIGNLIGHTS.ORG FOR LIST OF SPECIFIC QUALIFIED CONFIGURATIONS UNDER THE "QUALIFIED PRODUCTS LIST" TAB.

ORDERING GUIDE

EXAMPLE: VWBTLED66L4K48-9FAR

SERIES	LUMENS WITH "FAR" LENS	LUMENS WITH "FPR" LENS	KELVIN	FIX
VWBTLED	32L[2] 41L[3]	31L[2] 40L[3]	3K, 35K, 4K, 5K	24
	32L[1] 47L[1] 54L[1] 56L[1] 64L[1] 66L[1] 71L[2] 75L[2] 78L[2] 91L[2] 95L[2]	31L[1] 45L[1] 54L[1] 62L[1] 69L[2] 75L[2] 91L[2] 92L[2]		48
	64L[1] 89L[1] 100L[1] 128L[1] 152L[1] 167L[1]	N/A		96

**** LUMENS:**
"SEE PERFORMANCE CHART ON BACK PAGE"

KELVIN:
3K = 3,000 KELVIN
35K = 3,500 KELVIN
4K = 4,000 KELVIN
5K = 5,000 KELVIN

FIXTURE LENGTH:
24 - 24" OVERALL LENGTH
48 - 48" OVERALL LENGTH
94 - 94" OVERALL LENGTH

VOLTAGE:
5 - 347V
9 - 120-277 UNIVERSAL VOLTAGE

LENSES:
FPR - FROSTED POLYCARBONATE RIBBED LENS (NOT AVAILABLE ON 8' UNIT)
FAR - FROSTED ACRYLIC RIBBED LENS

OPTIONS:
SSL - STAINLESS STEEL LATCHES
DM1 - 0-10V DIMMING TO 1%(*DIMMING TO 3% STANDARD)
EM1 - 500 - 700 LUMEN BATTERY PACK (NOT AVAILABLE ON 2' UNIT)
EM2 - 1100 - 1400 LUMEN BATTERY PACK (NOT AVAILABLE ON 2' UNIT)
90 - 90 CRI

ACCESSORIES:
45026 - CHAIN HANGING MOUNTING BAIL (BRACKET ASSEMBLY REQUIRED / USE 2 PER FIXTURE)
55320 - VW MOUNTING BRACKET FOR USE WITH 3/8" CUSTOMER SUPPLIED THREADED ROD (2 BRACKETS REQUIRED PER FIXTURE)
45006 - STANDARD SUPPLIED MOUNTING BRACKETS
61114 - 45° ANGLE MOUNTING BRACKETS

NOTE:
POLYCARBONATE AND STAINLESS STEEL LATCHES CAN BE MADE TAMPER PROOF WITH THE FOLLOWING SCREWS:
-POLYCARBONATE - 1/2" #4 SCREW
-STAINLESS STEEL- 3/8" #6 SCREW
VWBTLED SERIES - SUPPLIED STANDARD WITH 45006 MOUNTING BRACKETS
61806 - HANDHELD WIRELESS CONFIGURATION TOOL, REQUIRED WITH MSHRC AND MSLRC MOTION SENSORS ONLY.

MOTION SENSORS:
MSH - 120/277 LINE VOLTAGE, PIR, HIGH BAY LENS (15'-40'), ON/OFF
MSL - 120/277 LINE VOLTAGE, PIR, LOW BAY LENS (8'-15'), ON/OFF
MSHDO - 120/277 LINE VOLTAGE, PIR, HIGH BAY LENS (15'-40'), 0-10V DIM TO OFF (FACTORY CONFIGURED)
MSHRC - 120/277 LINE VOLTAGE, PIR, PHOTOCELL, HIGH BAY LENS FOR 40' MOUNTING, 0-10V DIM, REMOTE CONFIGURABLE VIA HAND HELD IR REMOTE (ORDERED SEPARATELY)
MSLRC - 120/277 LINE VOLTAGE, PIR, PHOTOCELL, LOW BAY LENS FOR 20' MOUNTING, 0-10V DIM, REMOTE CONFIGURABLE VIA HAND HELD IR REMOTE (ORDERED SEPARATELY)

NOTE:
1 = MAXIMUM AMBIENT ENVIRONMENT OF 40C
2 = MAXIMUM AMBIENT ENVIRONMENT OF 30C
3 = MAXIMUM AMBIENT ENVIRONMENT OF 25C

MADE IN THE USA PARTS & LABOR

LUMAX INDUSTRIES, INC. Chestnut Avenue & Fourth Street
Altoona, PA 16603-0991 814-944-2537 Fax 814-944-6413
www.lumaxlighting.com

MADE IN THE USA PARTS & LABOR

LUMAX LIGHTING

PERFORMANCE CHART

FAR LENS

Lumen package	Fixture size	3000K CCT Delivered Lumens	3000K CCT Input Watts	3000K CCT LPW	3500K CCT Delivered Lumens	3500K CCT Input Watts	3500K CCT LPW	4000K CCT Delivered Lumens	4000K CCT Input Watts	4000K CCT LPW	5000K CCT Delivered Lumens	5000K CCT Input Watts	5000K CCT LPW
32L	24	3,220	31	104	3,274	31	106	3,382	31	109	3,484	31	112
41L		4,168	39	107	4,238	39	109	4,378	39	112	4,509	39	116
32L	48	3,220	31	104	3,274	31	106	3,382	31	109	3,484	31	112
47L		4,763	44	108	4,843	44	110	5,003	44	114	5,153	44	117
54L					5,419	48	113	5,599	48	117	5,767	48	120
56L		5,635	53	106	5,729	53	108	5,919	53	112	6,096	53	115
64L		6,440	61	106	6,548	61	107	6,764	61	111	6,967	61	114
66L		6,616	63	105	6,841	64	107	7,067	64	110	7,279	64	114
71L		7,173	69	104	7,294	69	106	7,535	69	109	7,761	69	112
75L		7,510	63	119	7,636	63	121	7,774	63	123	7,883	61	129
78L		7,840	67	117	7,971	67	119	8,235	67	123	8,482	67	127
91L								9,190	78	118			
95L		9,560	86	111	9,721	86	113	10,042	86	117	10,344	86	120
64L	96	6,440	61	106	6,548	61	107	6,764	61	111	6,967	61	114
89L		8,960	76	118	9,110	76	120	9,411	76	124	9,694	76	128
100L		10,074	92	110	10,243	92	111	10,582	92	115	10,899	92	118
128L		12,880	121	106	13,096	121	108	13,529	121	112	13,935	121	115
152L		15,236	129	118	15,492	129	120	16,005	129	124	16,485	129	128
167L		16,772	145	116	17,054	145	118	17,617	145	121	18,146	145	125

FPR LENS

Lumen package	Fixture size	3000K CCT Delivered Lumens	3000K CCT Input Watts	3000K CCT LPW	3500K CCT Delivered Lumens	3500K CCT Input Watts	3500K CCT LPW	4000K CCT Delivered Lumens	4000K CCT Input Watts	4000K CCT LPW	5000K CCT Delivered Lumens	5000K CCT Input Watts	5000K CCT LPW
31L	24	3,108	31	100	3,160	31	102	3,264	31	105	3,362	31	108
40L		4,022	39	103	4,090	39	105	4,225	39	108	4,352	39	112
31L	48	3,108	31	100	3,160	31	102	3,264	31	105	3,362	31	108
45L		4,597	44	104	4,674	44	106	4,829	44	110	4,973	44	113
54L		5,438	53	103	5,530	53	104	5,712	53	108	5,884	53	111
62L		6,215	61	102	6,320	61	104	6,528	61	107	6,724	61	110
69L		6,923	69	100	7,040	69	102	7,272	69	105	7,490	69	109
75L		7,566	67	113	7,693	67	115	7,948	67	119	8,186	67	122
91L								9,190	78	118			
92L		9,227	86	107	9,382	86	109	9,692	86	113	9,983	86	116

DIMENSIONS

SPECIFICATIONS AND DIMENSIONAL DATA SUBJECT TO CHANGE WITHOUT NOTICE.

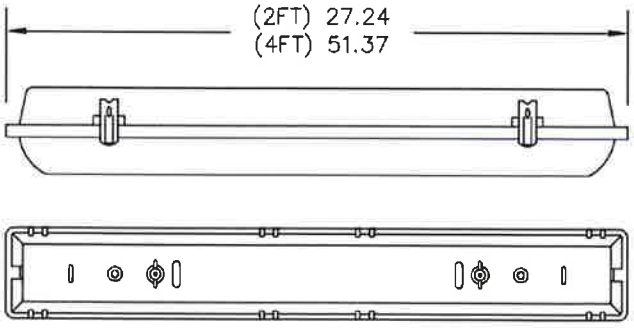

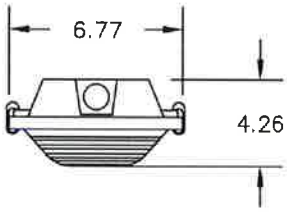

FROSTED POLYCARBONATE/
ACRYLIC RIBBED LENS

209

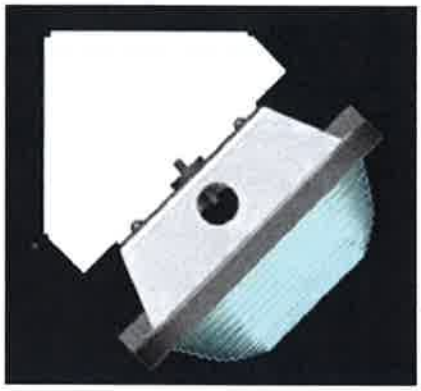

210

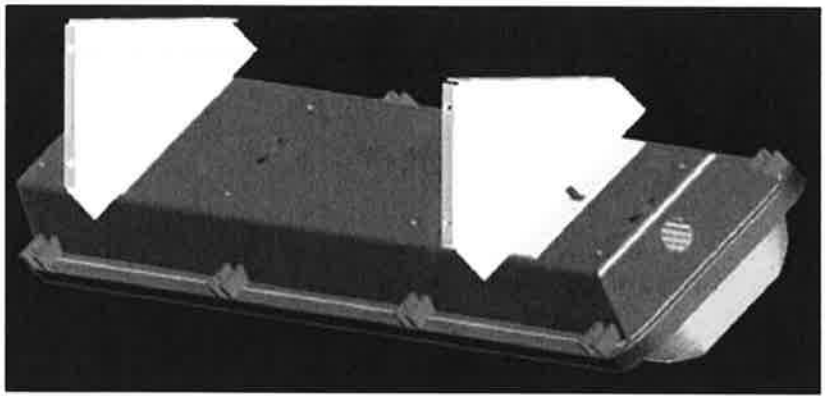

APPENDIX E

SECTION 260500 - COMMON WORK RESULTS FOR ELECTRICAL

PART 1 - GENERAL

1.1 RELATED DOCUMENTS

A. Drawings and general provisions of the Contract, including General and Supplementary Conditions and Division 01 Specification Sections, apply to this Section.

1.2 SUMMARY

A. Section Includes:

1. Electrical equipment coordination and installation.
2. Sleeves for raceways and cables.
3. Sleeve seals.
4. Grout.
5. Common electrical installation requirements.

1.3 DEFINITIONS

A. EPDM: Ethylene-propylene-diene terpolymer rubber.

B. NBR: Acrylonitrile-butadiene rubber.

1.4 SUBMITTALS

A. Product Data: For sleeve seals.

1.5 COORDINATION

A. Coordinate arrangement, mounting, and support of electrical equipment:

1. To allow maximum possible headroom unless specific mounting heights that reduce headroom are indicated.
2. To provide for ease of disconnecting the equipment with minimum interference to other installations.
3. Do not interfere with access to existing equipment.
4. So connecting raceways, cables and wireways, will be clear of obstructions and of the working and access space of other equipment.

B. Coordinate installation of required supporting devices and set sleeves in existing, masonry walls, and other structural components.

C. Coordinate sleeve selection and application with selection and application of firestopping.

PART 2 - PRODUCTS

2.1 SLEEVES FOR RACEWAYS AND CABLES

A. Steel Pipe Sleeves: ASTM A 53/A 53M, Type E, Grade B, Schedule 40, galvanized steel, plain ends.

B. Cast-Iron Pipe Sleeves: Cast or fabricated "wall pipe," equivalent to ductile-iron pressure pipe, with plain ends and integral waterstop, unless otherwise indicated.

2.2 SLEEVE SEALS

A. Description: Modular sealing device, designed for field assembly, to fill annular space between sleeve and raceway or cable.

1. Manufacturers: Subject to compliance with requirements, provide products by one of the following:

   a. Advance Products & Systems, Inc.
   b. Calpico, Inc.
   c. Metraflex Co.
   d. Pipeline Seal and Insulator, Inc.

2. Sealing Elements: EPDM or NBR interlocking links shaped to fit surface of cable or conduit. Include type and number required for material and size of raceway or cable.
3. Pressure Plates: Stainless steel. Include two for each sealing element.
4. Connecting Bolts and Nuts: Stainless steel of length required to secure pressure plates to sealing elements. Include one for each sealing element.

2.3 GROUT

A. Nonmetallic, Shrinkage-Resistant Grout: ASTM C 1107, factory-packaged, nonmetallic aggregate grout, noncorrosive, nonstaining, mixed with water to consistency suitable for application and a 30-minute working time.

PART 3 - EXECUTION

3.1 COMMON REQUIREMENTS FOR ELECTRICAL INSTALLATION

A. Comply with NECA 1.

B. Measure indicated mounting heights to bottom of unit for suspended items and to center of unit for wall-mounting items.

C. Headroom Maintenance: If mounting heights or other location criteria are not indicated, arrange and install components and equipment to provide maximum possible headroom consistent with these requirements.

D. Equipment: Install to facilitate service, maintenance, and repair or replacement of components of both electrical equipment and other nearby installations. Connect in such a way as to facilitate future disconnecting with minimum interference with other items in the vicinity.

3.2 SLEEVE INSTALLATION FOR ELECTRICAL PENETRATIONS

A. Electrical penetrations occur when raceways, cables or wireways, penetrate concrete slabs, concrete or masonry walls, or fire-rated floor and wall assemblies.

B. Concrete Slabs and Walls: Core-drill holes in existing walls or slabs and install sleeves.

C. Use pipe sleeves.

D. Fire-Rated Assemblies: Install sleeves for penetrations of fire-rated floor and wall assemblies.

E. Cut sleeves to length for mounting flush with both surfaces of walls.

F. Extend sleeves installed in floors 2 inches (50 mm) above finished floor level.

G. Size pipe sleeves to provide 1/4-inch (6.4-mm) annular clear space between sleeve and raceway or cable, unless indicated otherwise.

H. Seal space outside of sleeves with grout for penetrations of concrete and masonry

1. Promptly pack grout solidly between sleeve and wall so no voids remain. Tool exposed surfaces smooth; protect grout while curing.

I. Interior Penetrations of Non-Fire-Rated Walls and Floors: Seal annular space between sleeve and raceway or cable, using joint sealant appropriate for size, depth, and location of joint.

J. Fire-Rated-Assembly Penetrations: Maintain fire rating of walls, partitions, ceilings, and floors at raceway and cable penetrations. Install sleeves and seal raceway and cable penetration sleeves with firestop materials.

K. Roof-Penetration Sleeves: Seal penetration of individual raceways and cables with flexible boot-type flashing units applied in coordination with roofing work. Engage Roofing Contractor to provide weatherproofing around all roof penetrations.

L. Aboveground, Exterior-Wall Penetrations: Seal penetrations using steel pipe sleeves and mechanical sleeve seals. Select sleeve size to allow for 1-inch (25-mm) annular clear space between pipe and sleeve for installing mechanical sleeve seals.

3.3 SLEEVE-SEAL INSTALLATION

A. Install to seal exterior wall penetrations.

B. Use type and number of sealing elements recommended by manufacturer for raceway or cable material and size. Position raceway or cable in center of sleeve. Assemble mechanical sleeve seals and install in annular space between raceway or cable and sleeve. Tighten bolts against pressure plates that cause sealing elements to expand and make watertight seal.

3.4 FIRESTOPPING

A. Apply firestopping to penetrations of fire-rated floor and wall assemblies for electrical installations to restore original fire-resistance rating of assembly. Firestopping materials and shall be by STI or Nelson.

END OF SECTION 260500

SECTION 260519 - LOW-VOLTAGE ELECTRICAL POWER CONDUCTORS AND CABLES

PART 1 - GENERAL

1.1 RELATED DOCUMENTS

A. Drawings and general provisions of the Contract, including General and Supplementary Conditions and Division 01 Specification Sections, apply to this Section.

1.2 SUMMARY

A. Section Includes:

1. Building wires and cables rated 600 V and less.
2. Connectors, splices, and terminations rated 600 V and less.

1.3 ACTION SUBMITTALS

A. Product Data: For each type of product.

1.4 INFORMATIONAL SUBMITTALS

A. Qualification Data: For testing agency.

B. Field quality-control reports.

1.5 QUALITY ASSURANCE

A. Testing Agency Qualifications: Member company of NETA or an NRTL.

1. Testing Agency's Field Supervisor: Certified by NETA to supervise on-site testing.

PART 2 - PRODUCTS

2.1 CONDUCTORS AND CABLES

A. Subject to compliance with requirements, provide or comparable product by one of the following:

1. Alcan Products Corporation; Alcan Cable Division.
2. General Cable Technologies Corporation.

3. Southwire Incorporated.
4. Or Equal.

B. Copper Conductors: Comply with NEMA WC 70/ICEA S-95-658.

C. Conductor Insulation: Comply with NEMA WC 70/ICEA S-95-658 for Type THW-2, Type THHN-2-THWN-2, Type XHHW-2.

D. Multiconductor Cable: Comply with NEMA WC 70/ICEA S-95-658 for metal-clad cable, Type MC mineral-insulated, metal-sheathed cable, Type MI with ground wire.

2.2 CONNECTORS AND SPLICES

A. Subject to compliance with requirements, or comparable product by one of the following:

1. AFC Cable Systems, Inc.
2. Gardner Bender.
3. Hubbell Power Systems, Inc.
4. Or Equal.

B. Description: Factory-fabricated connectors and splices of size, ampacity rating, material, type, and class for application and service indicated.

2.3 SYSTEM DESCRIPTION

A. Electrical Components, Devices, and Accessories: Listed and labeled as defined in NFPA 70, by a qualified testing agency, and marked for intended location and application.

B. Comply with NFPA 70.

PART 3 - EXECUTION

3.1 CONDUCTOR MATERIAL APPLICATIONS

A. Feeders: Copper. Solid for No. 10 AWG and smaller; stranded for No. 8 AWG and larger.

B. Branch Circuits: Copper. Solid for No. 10 AWG and smaller; stranded for No. 8 AWG and larger.

3.2 CONDUCTOR INSULATION AND MULTICONDUCTOR CABLE APPLICATIONS AND WIRING METHODS

A. Exposed Feeders: Type THHN-2, single conductors in raceway.

B. Feeders Concealed in Ceilings, Walls, Partitions, and Crawlspaces: Type THHN-2, single conductors in raceway.

C. Feeders Concealed in Concrete, below Slabs-on-Grade, and Underground: Type THHW-2, single conductors in raceway.

D. Exposed Branch Circuits, Including in Crawlspaces: Type THHN-2, single conductors in raceway.

E. Branch Circuits Concealed in Ceilings, Walls, and Partitions: Metal-clad cable, Type MC.

F. Branch Circuits Concealed in Concrete, below Slabs-on-Grade, and Underground: Type THHW-2, single conductors in raceway.

3.3 INSTALLATION OF CONDUCTORS AND CABLES

A. Conceal cables in finished walls, ceilings, and floors unless otherwise indicated.

B. Complete raceway installation between conductor and cable termination points according to Section 260533 "Raceways and Boxes for Electrical Systems" prior to pulling conductors and cables.

C. Use manufacturer-approved pulling compound or lubricant where necessary; compound used must not deteriorate conductor or insulation. Do not exceed manufacturer's recommended maximum pulling tensions and sidewall pressure values.

D. Use pulling means, including fish tape, cable, rope, and basket-weave wire/cable grips, that will not damage cables or raceway.

E. Install exposed cables parallel and perpendicular to surfaces of exposed structural members, and follow surface contours where possible.

F. Support cables according to Section 260529 "Hangers and Supports for Electrical Systems."

3.4 CONNECTIONS

A. Tighten electrical connectors and terminals according to manufacturer's published torque-tightening values. If manufacturer's torque values are not indicated, use those specified in UL 486A-486B.

B. Make splices, terminations, and taps that are compatible with conductor material and that possess equivalent or better mechanical strength and insulation ratings than unspliced conductors.

1. Use oxide inhibitor in each splice, termination, and tap for aluminum conductors.

C. Wiring at Outlets: Install conductor at each outlet, with at least 6 inches of slack.

3.5 IDENTIFICATION

A. Identify and color-code conductors and cables according to Section 260553 "Identification for Electrical Systems."

B. Identify each spare conductor at each end with identity number and location of other end of conductor, and identify as spare conductor.

3.6 SLEEVE AND SLEEVE-SEAL INSTALLATION FOR ELECTRICAL PENETRATIONS

A. Install sleeves and sleeve seals at penetrations of exterior floor and wall assemblies. Comply with requirements in Section 260544 "Sleeves and Sleeve Seals for Electrical Raceways and Cabling."

3.7 FIRESTOPPING

A. Apply firestopping to electrical penetrations of fire-rated floor and wall assemblies to restore original fire-resistance rating of assembly according to Section 078413 "Penetration Firestopping."

3.8 FIELD QUALITY CONTROL

A. Testing Agency: Engage a qualified testing agency to perform tests and inspections.

B. Manufacturer's Field Service: Engage a factory-authorized service representative to test and inspect components, assemblies, and equipment installations, including connections.

C. Perform the following tests and inspections with the assistance of a factory-authorized service representative:

1. Perform each visual and mechanical inspection and electrical test stated in NETA Acceptance Testing Specification. Certify compliance with test parameters.
2. Infrared Scanning: After Substantial Completion, but not more than 60 days after Final Acceptance, perform an infrared scan of each splice in conductors No. 3 AWG and larger. Remove box and equipment covers so splices are accessible to portable scanner. Correct deficiencies determined during the scan.

    a. Follow-up Infrared Scanning: Perform an additional follow-up infrared scan of each splice 11 months after date of Substantial Completion.
    b. Instrument: Use an infrared scanning device designed to measure temperature or to detect significant deviations from normal values. Provide calibration record for device.

c. Record of Infrared Scanning: Prepare a certified report that identifies splices checked and that describes scanning results. Include notation of deficiencies detected, remedial action taken, and observations after remedial action.

D. Test and Inspection Reports: Prepare a written report to record the following:

1. Procedures used.
2. Results that comply with requirements.
3. Results that do not comply with requirements and corrective action taken to achieve compliance with requirements.

E. Cables will be considered defective if they do not pass tests and inspections.

END OF SECTION 260519

SECTION 260526 - GROUNDING AND BONDING FOR ELECTRICAL SYSTEMS

PART 1 - GENERAL

1.1 RELATED DOCUMENTS

A. Drawings and general provisions of the Contract, including General and Supplementary Conditions and Division 01 Specification Sections, apply to this Section.

1.2 SUMMARY

A. Section Includes: Grounding systems and equipment.

1.3 ACTION SUBMITTALS

A. Product Data: For each type of product indicated.

1.4 INFORMATIONAL SUBMITTALS

A. Informational Submittals: Plans showing dimensioned as-built locations of grounding features specified in "Field Quality Control" Article.

1. Ground rods.

B. Qualification Data: For qualified testing agency and testing agency's field supervisor.

C. Field quality-control reports.

1.5 CLOSEOUT SUBMITTALS

A. Operation and Maintenance Data: For grounding to include in emergency, operation, and maintenance manuals. In addition to items specified in Section 017823 "Operation and Maintenance Data," include the following:

1.6 QUALITY ASSURANCE

A. Electrical Components, Devices, and Accessories: Listed and labeled as defined in NFPA 70, by a qualified testing agency, and marked for intended location and application.

B. Comply with UL 467 for grounding and bonding materials and equipment.

PART 2 - PRODUCTS

2.1 CONDUCTORS

A. Insulated Conductors: Copper wire or cable insulated for 600 V unless otherwise required by applicable Code or authorities having jurisdiction.

B. Bare Copper Conductors:

1. Solid Conductors: ASTM B 3.
2. Stranded Conductors: ASTM B 8.
3. Bonding Cable: 28 kcmil, 14 strands of No. 17 AWG conductor, 1/4 inch in diameter.
4. Bonding Conductor: No. 4 or No. 6 AWG, stranded conductor.
5. Bonding Jumper: Copper tape, braided conductors terminated with copper ferrules; 1-5/8 inches wide and 1/16 inch thick.

2.2 CONNECTORS

A. Listed and labeled by an NRTL acceptable to authorities having jurisdiction for applications in which used and for specific types, sizes, and combinations of conductors and other items connected.

B. Bolted Connectors for Conductors and Pipes: Copper or copper alloy, pressure type with at least two bolts.

1. Pipe Connectors: Clamp type, sized for pipe.

C. Welded Connectors: Exothermic-welding kits of types recommended by kit manufacturer for materials being joined and installation conditions.

D. Bus-bar Connectors: Mechanical type, cast silicon bronze, solderless compression-type wire terminals, and long-barrel, two-bolt connection to ground bus bar.

2.3 GROUNDING ELECTRODES

A. Ground Rods: Copper-clad 3/4 inch by 10 feet in diameter.

1. Termination: Factory-attached No. 4/0 AWG bare conductor at least 48 inches long.
2. Backfill Material: Electrode manufacturer's recommended material.

PART 3 - EXECUTION

3.1 APPLICATIONS

A. Conductors: Install solid conductor for No. 8 AWG and smaller, and stranded conductors for No. 6 AWG and larger unless otherwise indicated.

B. Underground Grounding Conductors: Install bare copper conductor, No. 2/0 AWG minimum.

1. Bury at least 24 inches below grade.

C. Conductor Terminations and Connections:

1. Pipe and Equipment Grounding Conductor Terminations: Bolted connectors.
2. Underground Connections: Welded connectors.
3. Connections to Ground Rods: Bolted connectors.
4. Connections to Structural Steel: Welded connectors.

3.2 EQUIPMENT GROUNDING

A. Install insulated equipment grounding conductors with all feeders and branch circuits.

B. Install insulated equipment grounding conductors with the following items, in addition to those required by NFPA 70:

1. Feeders and branch circuits.
2. Lighting circuits.
3. Receptacle circuits.

C. Metal Poles Supporting Outdoor Lighting Fixtures: Install grounding electrode and a separate insulated equipment grounding conductor in addition to grounding conductor installed with branch-circuit conductors.

3.3 INSTALLATION

A. Grounding Conductors: Route along shortest and straightest paths possible unless otherwise indicated or required by Code. Avoid obstructing access or placing conductors where they may be subjected to strain, impact, or damage.

B. Ground Rods: Drive rods until tops are 2 inches below finished floor or final grade unless otherwise indicated.

1. Interconnect ground rods with grounding electrode conductor below grade and as otherwise indicated. Make connections without exposing steel or damaging coating if any.

C. Bonding Straps and Jumpers: Install in locations accessible for inspection and maintenance except where routed through short lengths of conduit.

1. Bonding to Structure: Bond straps directly to basic structure, taking care not to penetrate any adjacent parts.
2. Use exothermic-welded connectors for outdoor locations; if a disconnect-type connection is required, use a bolted clamp.

D. Grounding and Bonding for Piping:

1. Metal Water Service Pipe: Install insulated copper grounding conductors, in conduit, from building's main service equipment, or grounding bus, to main metal water service entrances to building. Connect grounding conductors to main metal water service pipes; use a bolted clamp connector or bolt a lug-type connector to a pipe flange by using one of the lug bolts of the flange. Where a dielectric main water fitting is installed, connect grounding conductor on street side of fitting. Bond metal grounding conductor conduit or sleeve to conductor at each end.
2. Water Meter Piping: Use braided-type bonding jumpers to electrically bypass water meters. Connect to pipe with a bolted connector.
3. Bond each aboveground portion of gas piping system downstream from equipment shutoff valve.

3.4 LABELING

A. Comply with requirements in Section 260553 "Identification for Electrical Systems" for instruction signs. The label or its text shall be green.

1. Label Text: "If this connector or cable is loose or if it must be removed for any reason, notify the facility manager."

3.5 FIELD QUALITY CONTROL

A. Testing Agency: Engage a qualified testing agency to perform tests and inspections.

B. Manufacturer's Field Service: Engage a factory-authorized service representative to inspect, test, and adjust components, assemblies, and equipment installations, including connections.

C. Perform tests and inspections.

1. Manufacturer's Field Service: Engage a factory-authorized service representative to inspect components, assemblies, and equipment installations, including connections, and to assist in testing.

D. Grounding system will be considered defective if it does not pass tests and inspections.

E. Prepare test and inspection reports.

F. Report measured ground resistances that exceed the following values:

1. Power and Lighting Equipment or System with Capacity of 500 kVA and Less: 10 ohms.
2. Power and Lighting Equipment or System with Capacity of 500 to 1000 kVA: 5 ohms.
3. Power and Lighting Equipment or System with Capacity More Than 1000 kVA: 3 ohms.

G. Excessive Ground Resistance: If resistance to ground exceeds specified values, notify Architect promptly and include recommendations to reduce ground resistance.

END OF SECTION 260526

SECTION 260529 - HANGERS AND SUPPORTS FOR ELECTRICAL SYSTEMS

PART 1 - GENERAL

1.1 RELATED DOCUMENTS

A. Drawings and general provisions of the Contract, including General and Supplementary Conditions and Division 01 Specification Sections, apply to this Section.

1.2 SUMMARY

A. This Section includes the following:

1. Hangers and supports for electrical equipment and systems.
2. Construction requirements for concrete bases.

1.3 DEFINITIONS

A. EMT: Electrical metallic tubing.

B. IMC: Intermediate metal conduit.

C. RMC: Rigid metal conduit.

1.4 PERFORMANCE REQUIREMENTS

A. Delegated Design: Design supports for multiple raceways, including comprehensive engineering analysis by a qualified professional engineer, using performance requirements and design criteria indicated.

B. Design supports for multiple raceways capable of supporting combined weight of supported systems and its contents.

C. Design equipment supports capable of supporting combined operating weight of supported equipment and connected systems and components.

D. Rated Strength: Adequate in tension, shear, and pullout force to resist maximum loads calculated or imposed for this Project, with a minimum structural safety factor of five times the applied force.

1.5 ACTION SUBMITTALS

A. Product Data: For the following:

1. Steel slotted support systems.
2. Nonmetallic slotted support systems.

B. Shop Drawings: Show fabrication and installation details.

1. Equipment supports.

PART 2 - PRODUCTS

2.1 SUPPORT, ANCHORAGE, AND ATTACHMENT COMPONENTS

A. Steel Slotted Support Systems: Comply with MFMA-4, factory-fabricated components for field assembly.

1. Manufacturers: Subject to compliance with requirements, provide products by one of the following:

a. Allied Tube & Conduit.
b. Cooper B-Line, Inc.; a division of Cooper Industries.
c. Thomas & Betts Corporation.
d. Or Approved Equal.

2. Metallic Coatings: Hot-dip galvanized after fabrication and applied according to MFMA-4.
3. Nonmetallic Coatings: Manufacturer's standard PVC, polyurethane, or polyester coating applied according to MFMA-4.
4. Painted Coatings: Manufacturer's standard painted coating applied according to MFMA-4.
5. Channel Dimensions: Selected for applicable load criteria.

B. Raceway and Cable Supports: As described in NECA 1 and NECA 101.

C. Conduit and Cable Support Devices: Steel hangers, clamps, and associated fittings, designed for types and sizes of raceway or cable to be supported.

D. Structural Steel for Fabricated Supports and Restraints: ASTM A 36/A 36M, steel plates, shapes, and bars; black and galvanized.

E. Mounting, Anchoring, and Attachment Components: Items for fastening electrical items or their supports to building surfaces include the following:

1. Powder-Actuated Fasteners: Threaded-steel stud, for use in hardened portland cement concrete, steel, or wood, with tension, shear, and pullout capacities appropriate for supported loads and building materials where used.

a. Manufacturers: Subject to compliance with requirements, provide products by one of the following:

1) Hilti Inc.
2) ITW Ramset/Red Head; a division of Illinois Tool Works, Inc.
3) MKT Fastening, LLC.
4) Or Approved Equal.

2. Mechanical-Expansion Anchors: Insert-wedge-type, stainless steel, for use in hardened portland cement concrete with tension, shear, and pullout capacities appropriate for supported loads and building materials in which used.

a. Manufacturers: Subject to compliance with requirements, provide products by one of the following:

1) Cooper B-Line, Inc.; a division of Cooper Industries.
2) Empire Tool and Manufacturing Co., Inc.
3) Hilti Inc.
4) Or Approved Equal.

3. Concrete Inserts: Steel or malleable-iron, slotted support system units similar to MSS Type 18; complying with MFMA-4 or MSS SP-58.
4. Clamps for Attachment to Steel Structural Elements: MSS SP-58, type suitable for attached structural element.
5. Through Bolts: Structural type, hex head, and high strength. Comply with ASTM A 325.
6. Toggle Bolts: All-steel springhead type.
7. Hanger Rods: Threaded steel.

2.2 FABRICATED METAL EQUIPMENT SUPPORT ASSEMBLIES

A. Description: Welded or bolted, structural-steel shapes, shop or field fabricated to fit dimensions of supported equipment.

B. Materials: Comply with requirements in Section 055000 "Metal Fabrications" for steel shapes and plates.

PART 3 - EXECUTION

3.1 APPLICATION

A. Comply with NECA 1 and NECA 101 for application of hangers and supports for electrical equipment and systems except if requirements in this Section are stricter.

B. Maximum Support Spacing and Minimum Hanger Rod Size for Raceway: Space supports for EMT, IMC, and RMC as required by NFPA 70. Minimum rod size shall be 1/4 inch in diameter.

C. Multiple Raceways or Cables: Install trapeze-type supports fabricated with steel slotted support system, sized so capacity can be increased by at least 25 percent in future without exceeding specified design load limits.

1. Secure raceways and cables to these supports with two-bolt conduit clamps.

D. Spring-steel clamps designed for supporting single conduits without bolts may be used for 1-1/2-inch and smaller raceways serving branch circuits and communication systems above suspended ceilings and for fastening raceways to trapeze supports.

3.2 SUPPORT INSTALLATION

A. Comply with NECA 1 and NECA 101 for installation requirements except as specified in this Article.

B. Raceway Support Methods: In addition to methods described in NECA 1, EMT, IMC, and RMC may be supported by openings through structure members, as permitted in NFPA 70.

C. Strength of Support Assemblies: Where not indicated, select sizes of components so strength will be adequate to carry present and future static loads within specified loading limits. Minimum static design load used for strength determination shall be weight of supported components plus 200 lb.

D. Mounting and Anchorage of Surface-Mounted Equipment and Components: Anchor and fasten electrical items and their supports to building structural elements by the following methods unless otherwise indicated by code:

1. To Wood: Fasten with lag screws or through bolts.
2. To New Concrete: Bolt to concrete inserts.
3. To Masonry: Approved toggle-type bolts on hollow masonry units and expansion anchor fasteners on solid masonry units.
4. To Existing Concrete: Expansion anchor fasteners.
5. Instead of expansion anchors, powder-actuated driven threaded studs provided with lock washers and nuts may be used in existing standard-weight concrete 4 inches thick or greater. Do not use for anchorage to lightweight-aggregate concrete or for slabs less than 4 inches thick.
6. To Steel: Welded threaded studs complying with AWS D1.1/D1.1M, with lock washers and nuts Beam clamps (MSS Type 19, 21, 23, 25, or 27) complying with MSS SP-69.
7. To Light Steel: Sheet metal screws.
8. Items Mounted on Hollow Walls and Nonstructural Building Surfaces: Mount cabinets, panelboards, disconnect switches, control enclosures, pull and junction boxes, transformers, and other devices on slotted-channel racks attached to substrate by means that meet anchorage requirements.

E. Drill holes for expansion anchors in concrete at locations and to depths that avoid reinforcing bars.

3.3 INSTALLATION OF FABRICATED METAL SUPPORTS

A. Comply with installation requirements in Section 055000 "Metal Fabrications" for site-fabricated metal supports.

B. Cut, fit, and place miscellaneous metal supports accurately in location, alignment, and elevation to support and anchor electrical materials and equipment.

C. Field Welding: Comply with AWS D1.1/D1.1M.

3.4 PAINTING

A. Touchup: Clean field welds and abraded areas of shop paint. Paint exposed areas immediately after erecting hangers and supports. Use same materials as used for shop painting. Comply with SSPC-PA 1 requirements for touching up field-painted surfaces.

1. Apply paint by brush or spray to provide minimum dry film thickness of 2.0 mils.

B. Galvanized Surfaces: Clean welds, bolted connections, and abraded areas and apply galvanizing-repair paint to comply with ASTM A 780.

END OF SECTION 260529

SECTION 260533 - RACEWAYS AND BOXES FOR ELECTRICAL SYSTEMS

PART 1 - GENERAL

1.1 RELATED DOCUMENTS

A. Drawings and general provisions of the Contract, including General and Supplementary Conditions and Division 01 Specification Sections, apply to this Section.

1.2 SUMMARY

A. Section Includes:

1. Metal conduits, tubing, and fittings.
2. Nonmetal conduits, tubing, and fittings.
3. Metal wireways and auxiliary gutters.
4. Nonmetal wireways and auxiliary gutters.
5. Surface raceways.
6. Boxes, enclosures, and cabinets.
7. Handholes and boxes for exterior underground cabling.

B. Related Requirements:

1. Section 260543 "Underground Ducts and Raceways for Electrical Systems" for exterior ductbanks, manholes, and underground utility construction.
2. Section 270528 "Pathways for Communications Systems" for conduits, wireways, surface pathways, innerduct, boxes, faceplate adapters, enclosures, cabinets, and handholes serving communications systems.
3. Section 280528 "Pathways for Electronic Safety and Security" for conduits, surface pathways, innerduct, boxes, and faceplate adapters serving electronic safety and security.

1.3 ACTION SUBMITTALS

A. Product Data: For surface raceways, wireways and fittings, floor boxes, hinged-cover enclosures, and cabinets.

B. Shop Drawings: For custom enclosures and cabinets. Include plans, elevations, sections, and attachment details.

C. Samples: For wireways nonmetallic wireways and for each color and texture specified, 12 inches long.

PART 2 - PRODUCTS

2.1 METAL CONDUITS, TUBING, AND FITTINGS

A. Manufacturers: Subject to compliance with requirements, provide products by one of the following:

1. AFC Cable Systems, Inc.
2. Allied Tube & Conduit; a Tyco International Ltd. Co.
3. Southwire Company.
4. Or Approved Equal.

B. Listing and Labeling: Metal conduits, tubing, and fittings shall be listed and labeled as defined in NFPA 70, by a qualified testing agency, and marked for intended location and application.

C. GRC: Comply with ANSI C80.1 and UL 6.

D. ARC: Comply with ANSI C80.5 and UL 6A.

E. IMC: Comply with ANSI C80.6 and UL 1242.

F. EMT: Comply with ANSI C80.3 and UL 797.

G. FMC: Comply with UL 1; zinc-coated steel.

H. LFMC: Flexible steel conduit with PVC jacket and complying with UL 360.

I. Fittings for Metal Conduit: Comply with NEMA FB 1 and UL 514B.

1. Fittings for EMT:

a. Material: Steel.
b. Type: Compression.

2. Expansion Fittings: PVC or steel to match conduit type, complying with UL 651, rated for environmental conditions where installed, and including flexible external bonding jumper.

J. Joint Compound for IMC, GRC, or ARC: Approved, as defined in NFPA 70, by authorities having jurisdiction for use in conduit assemblies, and compounded for use to lubricate and protect threaded conduit joints from corrosion and to enhance their conductivity.

2.2 NONMETALLIC CONDUITS, TUBING, AND FITTINGS

A. Manufacturers: Subject to compliance with requirements, provide products by one of the following:

1. AFC Cable Systems, Inc.

2. Anamet Electrical, Inc.
3. Arnco Corporation.
4. Or Approved Equal.

B. Listing and Labeling: Nonmetallic conduits, tubing, and fittings shall be listed and labeled as defined in NFPA 70, by a qualified testing agency, and marked for intended location and application.

C. RNC: PVC 80, complying with NEMA TC 2 and UL 651 unless otherwise indicated.

D. Solvent cements and adhesive primers shall have a VOC content of 510 and 550 g/L or less, respectively, when calculated according to 40 CFR 59, Subpart D (EPA Method 24).

E. Solvent cements and adhesive primers shall comply with the testing and product requirements of the California Department of Health Services' "Standard Practice for the Testing of Volatile Organic Emissions from Various Sources Using Small-Scale Environmental Chambers."

2.3 METAL WIREWAYS AND AUXILIARY GUTTERS

A. Manufacturers: Subject to compliance with requirements, provide products by one of the following:

1. Cooper B-Line, Inc.
2. Hoffman; a Pentair company.
3. Mono-Systems, Inc.
4. Or Approved Equal.

B. Description: Sheet metal, complying with UL 870 and NEMA 250, Type 3R unless otherwise indicated, and sized according to NFPA 70.

1. Metal wireways installed outdoors shall be listed and labeled as defined in NFPA 70, by a qualified testing agency, and marked for intended location and application.

C. Fittings and Accessories: Include covers, couplings, offsets, elbows, expansion joints, adapters, hold-down straps, end caps, and other fittings to match and mate with wireways as required for complete system.

D. Wireway Covers: Flanged-and-gasketed type unless otherwise indicated.

E. Finish: Manufacturer's standard enamel finish.

2.4 NONMETALLIC WIREWAYS AND AUXILIARY GUTTERS

A. Manufacturers: Subject to compliance with requirements, provide products by one of the following:

1. Allied Moulded Products, Inc.

2. Hoffman; a Pentair company.
3. Lamson & Sessions; Carlon Electrical Products.
4. Or Approved Equal.

B. Listing and Labeling: Nonmetallic wireways and auxiliary gutters shall be listed and labeled as defined in NFPA 70, by a qualified testing agency, and marked for intended location and application.

C. Description: Fiberglass polyester, extruded and fabricated to required size and shape, without holes or knockouts. Cover shall be gasketed with oil-resistant gasket material and fastened with captive screws treated for corrosion resistance. Connections shall be flanged and have stainless-steel screws and oil-resistant gaskets.

D. Fittings and Accessories: Couplings, offsets, elbows, expansion joints, adapters, hold-down straps, end caps, and other fittings shall match and mate with wireways as required for complete system.

E. Solvent cements and adhesive primers shall have a VOC content of 510 and 550 g/L or less, respectively, when calculated according to 40 CFR 59, Subpart D (EPA Method 24).

2.5 BOXES, ENCLOSURES, AND CABINETS

A. Manufacturers: Subject to compliance with requirements, provide products by one of the following:

1. Adalet.
2. Cooper Technologies Company; Cooper Crouse-Hinds.
3. Hoffman; a Pentair company.
4. Or Approved Equal.

B. General Requirements for Boxes, Enclosures, and Cabinets: Boxes, enclosures, and cabinets installed in wet locations shall be listed for use in wet locations.

C. Sheet Metal Outlet and Device Boxes: Comply with NEMA OS 1 and UL 514A.

D. Cast-Metal Outlet and Device Boxes: Comply with NEMA FB 1, aluminum, Type FD, with gasketed cover.

E. Nonmetallic Outlet and Device Boxes: Comply with NEMA OS 2 and UL 514C.

F. Small Sheet Metal Pull and Junction Boxes: NEMA OS 1.

G. Cast-Metal Access, Pull, and Junction Boxes: Comply with NEMA FB 1 and UL 1773, galvanized, cast iron with gasketed cover.

H. Box extensions used to accommodate new building finishes shall be of same material as recessed box.

I. Device Box Dimensions: 4 inches by 2-1/8 inches by 2-1/8 inches deep.

J. Hinged-Cover Enclosures: Comply with UL 50 and NEMA 250, Type 3R with continuous-hinge cover with flush latch unless otherwise indicated.

1. Metal Enclosures: Steel, finished inside and out with manufacturer's standard enamel.
2. Nonmetallic Enclosures: Plastic.
3. Interior Panels: Steel; all sides finished with manufacturer's standard enamel.

2.6 HANDHOLES AND BOXES FOR EXTERIOR UNDERGROUND WIRING

A. General Requirements for Handholes and Boxes:

1. Boxes and handholes for use in underground systems shall be designed and identified as defined in NFPA 70, for intended location and application.
2. Boxes installed in wet areas shall be listed and labeled as defined in NFPA 70, by a qualified testing agency, and marked for intended location and application.

B. Polymer-Concrete Handholes and Boxes with Polymer-Concrete Cover: Molded of sand and aggregate, bound together with polymer resin, and reinforced with steel, fiberglass, or a combination of the two.

1. Manufacturers: Subject to compliance with requirements, provide products by one of the following:

a. Armorcast Products Company.
b. Carson Industries LLC.
c. Oldcastle Precast, Inc.; Christy Concrete Products.
d. Or Approved Equal.

2. Standard: Comply with SCTE 77.
3. Configuration: Designed for flush burial with open bottom unless otherwise indicated.
4. Cover: Weatherproof, secured by tamper-resistant locking devices and having structural load rating consistent with enclosure and handhole location.
5. Cover Finish: Nonskid finish shall have a minimum coefficient of friction of 0.50.
6. Cover Legend: Molded lettering, "ELECTRIC."
7. Conduit Entrance Provisions: Conduit-terminating fittings shall mate with entering ducts for secure, fixed installation in enclosure wall.
8. Handholes 12 Inches Wide by 24 Inches Long and Larger:

2.7 SOURCE QUALITY CONTROL FOR UNDERGROUND ENCLOSURES

A. Handhole and Pull-Box Prototype Test: Test prototypes of handholes and boxes for compliance with SCTE 77. Strength tests shall be for specified tier ratings of products supplied.

1. Tests of materials shall be performed by an independent testing agency.

2. Strength tests of complete boxes and covers shall be by either an independent testing agency or manufacturer. A qualified registered professional engineer shall certify tests by manufacturer.
3. Testing machine pressure gages shall have current calibration certification complying with ISO 9000 and ISO 10012 and traceable to NIST standards.

PART 3 - EXECUTION

3.1 RACEWAY APPLICATION

A. Outdoors: Apply raceway products as specified below unless otherwise indicated:

1. Exposed Conduit: RNC, Type EPC-80-PVC.
2. Concealed Conduit, Aboveground: RNC, Type EPC-40-PVC.
3. Underground Conduit: RNC, Type EPC-80-PVC.
4. Boxes and Enclosures, Aboveground: NEMA 250, Type 3R.

B. Indoors: Apply raceway products as specified below unless otherwise indicated:

1. Exposed, Not Subject to Physical Damage: EMT.
2. Exposed, Not Subject to Severe Physical Damage: EMT.
3. Exposed and Subject to Severe Physical Damage: GRC.
4. Concealed in Ceilings and Interior Walls and Partitions: EMT.
5. Damp or Wet Locations: GRC.
6. Boxes and Enclosures: NEMA 250, Type 1.

C. Minimum Raceway Size: 3/4-inch (21-mm) trade size.

D. Raceway Fittings: Compatible with raceways and suitable for use and location.

1. Rigid and Intermediate Steel Conduit: Use threaded rigid steel conduit fittings unless otherwise indicated. Comply with NEMA FB 2.10.
2. EMT: Use compression, steel fittings. Comply with NEMA FB 2.10.
3. Flexible Conduit: Use only fittings listed for use with flexible conduit. Comply with NEMA FB 2.20.

E. Install nonferrous conduit or tubing for circuits operating above 60 Hz. Where aluminum raceways are installed for such circuits and pass through concrete, install in nonmetallic sleeve.

F. Do not install aluminum conduits, boxes, or fittings in contact with concrete or earth.

G. Do not install nonmetallic conduit where ambient temperature exceeds 120 deg F.

3.2 INSTALLATION

A. Comply with NECA 1 and NECA 101 for installation requirements except where requirements on Drawings or in this article are stricter. Comply with NECA 102 for aluminum conduits. Comply with NFPA 70 limitations for types of raceways allowed in specific occupancies and number of floors.

B. Keep raceways at least 6 inches away from parallel runs of flues and steam or hot-water pipes. Install horizontal raceway runs above water and steam piping.

C. Complete raceway installation before starting conductor installation.

D. Comply with requirements in Section 260529 "Hangers and Supports for Electrical Systems" for hangers and supports.

E. Arrange stub-ups so curved portions of bends are not visible above finished or grade.

F. Install no more than the equivalent of three 90-degree bends in any conduit run except for control wiring conduits, for which fewer bends are allowed. Support within 12 inches of changes in direction.

G. Conceal conduit and EMT within finished walls, ceilings, and floors unless otherwise indicated. Install conduits parallel or perpendicular to building lines.

H. Support conduit within 12 inches of enclosures to which attached.

I. Threaded Conduit Joints, Exposed to Wet, Damp, Corrosive, or Outdoor Conditions: Apply listed compound to threads of raceway and fittings before making up joints. Follow compound manufacturer's written instructions.

J. Raceway Terminations at Locations Subject to Moisture or Vibration: Use insulating bushings to protect conductors including conductors smaller than No. 4 AWG.

K. Terminate threaded conduits into threaded hubs or with locknuts on inside and outside of boxes or cabinets. Install bushings on conduits up to 1-1/4-inch trade size and insulated throat metal bushings on 1-1/2-inch trade size and larger conduits terminated with locknuts. Install insulated throat metal grounding bushings on service conduits.

L. Install raceways square to the enclosure and terminate at enclosures with locknuts. Install locknuts hand tight plus 1/4 turn more.

M. Do not rely on locknuts to penetrate nonconductive coatings on enclosures. Remove coatings in the locknut area prior to assembling conduit to enclosure to assure a continuous ground path.

N. Cut conduit perpendicular to the length. For conduits 2-inch trade size and larger, use roll cutter or a guide to make cut straight and perpendicular to the length.

O. Install pull wires in empty raceways. Use polypropylene or monofilament plastic line with not less than 200-lb (90-kg) tensile strength. Leave at least 12 inches of slack at each end of pull wire. Cap underground raceways designated as spare above grade alongside raceways in use.

P. Install raceway sealing fittings at accessible locations according to NFPA 70 and fill them with listed sealing compound. For concealed raceways, install each fitting in a flush steel box with a blank cover plate having a finish similar to that of adjacent plates or surfaces. Install raceway sealing fittings according to NFPA 70.

Q. Install devices to seal raceway interiors at accessible locations. Locate seals so no fittings or boxes are between the seal and the following changes of environments. Seal the interior of all raceways at the following points:

1. Where an underground service raceway enters a building or structure.
2. Where otherwise required by NFPA 70.

R. Comply with manufacturer's written instructions for solvent welding RNC and fittings.

S. Expansion-Joint Fittings:

1. Install in each run of aboveground RNC that is located where environmental temperature change may exceed 30 deg F and that has straight-run length that exceeds 25 feet. Install in each run of aboveground RMC and EMT conduit that is located where environmental temperature change may exceed 100 deg F and that has straight-run length that exceeds 100 feet.
2. Install type and quantity of fittings that accommodate temperature change listed for each of the following locations:

    a. Outdoor Locations Not Exposed to Direct Sunlight: 125 deg F.
    b. Outdoor Locations Exposed to Direct Sunlight: 155 deg F.
    c. Indoor Spaces Connected with Outdoors without Physical Separation: 125 deg F temperature change.
    d. Attics: 135 deg F.

3. Install fitting(s) that provide expansion and contraction for at least 0.00041 inch per foot of length of straight run per deg F of temperature change for PVC conduits. Install fitting(s) that provide expansion and contraction for at least 0.000078 inch per foot of length of straight run per deg F of temperature change for metal conduits.
4. Install expansion fittings at all locations where conduits cross building or structure expansion joints.
5. Install each expansion-joint fitting with position, mounting, and piston setting selected according to manufacturer's written instructions for conditions at specific location at time of installation. Install conduit supports to allow for expansion movement.

T. Mount boxes at heights indicated on Drawings. If mounting heights of boxes are not individually indicated, give priority to ADA requirements. Install boxes with height measured to center of box unless otherwise indicated.

U. Locate boxes so that cover or plate will not span different building finishes.

V. Fasten junction and pull boxes to or support from building structure. Do not support boxes by conduits.

3.3 INSTALLATION OF UNDERGROUND CONDUIT

A. Direct-Buried Conduit:

1. Excavate trench bottom to provide firm and uniform support for conduit. Prepare trench bottom as specified in Section 312000 "Earth Moving" for pipe less than 6 inches in nominal diameter.
2. Install backfill as specified in Section 312000 "Earth Moving."
3. After installing conduit, backfill and compact. Start at tie-in point, and work toward end of conduit run, leaving conduit at end of run free to move with expansion and contraction as temperature changes during this process. Firmly hand tamp backfill around conduit to provide maximum supporting strength. After placing controlled backfill to within 12 inches of finished grade, make final conduit connection at end of run and complete backfilling with normal compaction as specified in Section 312000 "Earth Moving."
4. Install manufactured duct elbows for stub-ups at poles and equipment and at building entrances through floor unless otherwise indicated. Encase elbows for stub-up ducts throughout length of elbow.
5. Install manufactured rigid steel conduit elbows for stub-ups at poles and equipment and at building entrances through floor.

    a. Couple steel conduits to ducts with adapters designed for this purpose, and encase coupling with 3 inches of concrete for a minimum of 12 inches on each side of the coupling.
    b. For stub-ups at equipment mounted on outdoor concrete bases and where conduits penetrate building foundations, extend steel conduit horizontally a minimum of 60 inches from edge of foundation or equipment base. Install insulated grounding bushings on terminations at equipment.

6. Underground Warning Tape: Comply with requirements in Section 260553 "Identification for Electrical Systems."

3.4 INSTALLATION OF UNDERGROUND HANDHOLES AND BOXES

A. Install handholes and boxes level and plumb and with orientation and depth coordinated with connecting conduits to minimize bends and deflections required for proper entrances.

B. Unless otherwise indicated, support units on a level bed of crushed stone or gravel, graded from 1/2-inch sieve to No. 4 sieve and compacted to same density as adjacent undisturbed earth.

C. Elevation: In paved areas, set so cover surface will be flush with finished grade. Set covers of other enclosures 1 inch above finished grade.

D. Install handholes with bottom below frost line, below grade.

E. Install removable hardware, including pulling eyes, cable stanchions, cable arms, and insulators, as required for installation and support of cables and conductors and as indicated. Select arm lengths to be long enough to provide spare space for future cables but short enough to preserve adequate working clearances in enclosure.

F. Field-cut openings for conduits according to enclosure manufacturer's written instructions. Cut wall of enclosure with a tool designed for material to be cut. Size holes for terminating fittings to be used, and seal around penetrations after fittings are installed.

3.5 SLEEVE AND SLEEVE-SEAL INSTALLATION FOR ELECTRICAL PENETRATIONS

A. Install sleeves and sleeve seals at penetrations of exterior floor and wall assemblies. Comply with requirements in Section 260544 "Sleeves and Sleeve Seals for Electrical Raceways and Cabling."

3.6 FIRESTOPPING

A. Install firestopping at penetrations of fire-rated floor and wall assemblies. Comply with requirements in Section 078413 "Penetration Firestopping."

3.7 PROTECTION

A. Protect coatings, finishes, and cabinets from damage and deterioration.

1. Repair damage to galvanized finishes with zinc-rich paint recommended by manufacturer.
2. Repair damage to PVC coatings or paint finishes with matching touchup coating recommended by manufacturer.

END OF SECTION 260533

SECTION 260543 - UNDERGROUND DUCTS AND RACEWAYS FOR ELECTRICAL SYSTEMS

PART 1 - GENERAL

1.1 RELATED DOCUMENTS

A. Drawings and general provisions of the Contract, including General and Supplementary Conditions and Division 01 Specification Sections, apply to this Section.

1.2 SUMMARY

A. This Section includes the following:

1. Conduit and duct accessories for direct-buried and single duct runs.
2. Handholes and boxes.
3. Manholes.

1.3 DEFINITION

A. RNC: Rigid nonmetallic conduit.

1.4 ACTION SUBMITTALS

A. Product Data: For the following:

1. Duct-bank materials, including separators and miscellaneous components.
2. Ducts and conduits and their accessories, including elbows, end bells, bends, fittings, and solvent cement.
3. Accessories for handholes and boxes.
4. Warning tape.

B. Shop Drawings for Factory-Fabricated Handholes and Boxes Other Than Precast Concrete: Include dimensioned plans, sections, and elevations, and fabrication and installation details, including the following:

1. Duct entry provisions, including locations and duct sizes.
2. Cover design.
3. Grounding details.
4. Dimensioned locations of cable rack inserts, and pulling-in and lifting irons.

1.5 INFORMATIONAL SUBMITTALS

A. Duct-Bank Coordination Drawings: Show duct profiles and coordination with other utilities and underground structures.

1. Include plans and sections, drawn to scale, and show bends and locations of expansion fittings.
2. Drawings shall be signed and sealed by a qualified professional engineer.

B. Product Certificates: For concrete and steel used in precast concrete handholes, as required by ASTM C 858.

C. Qualification Data: For professional engineer and testing agency.

D. Source quality-control test reports.

E. Field quality-control test reports.

1.6 QUALITY ASSURANCE

A. Testing Agency Qualifications: Qualified according to ASTM E 329 for testing indicated.

B. Comply with ANSI C2.

C. Comply with NFPA 70.

1.7 DELIVERY, STORAGE, AND HANDLING

A. Deliver ducts to Project site with ends capped. Store nonmetallic ducts with supports to prevent bending, warping, and deforming.

B. Store factory-fabricated underground utility structures at Project site as recommended by manufacturer to prevent physical damage. Arrange so identification markings are visible.

C. Lift and support precast concrete units only at designated lifting or supporting points.

1.8 COORDINATION

A. Coordinate layout and installation of handholes, and boxes with final arrangement of other utilities, site grading, and surface features as determined in the field.

B. Coordinate elevations of duct entrances into handholes, and boxes with final locations and profiles of ducts as determined by coordination with other utilities, underground obstructions, and surface features. Revise locations and elevations from those indicated as required to suit field conditions and to ensure that duct runs drain to handholes, and as approved by Architect.

PART 2 - PRODUCTS

2.1 CONDUIT

A. Rigid Steel Conduit: Galvanized. Comply with ANSI C80.1.

B. RNC: NEMA TC 2, Type EPC-80-PVC, UL 651, with matching fittings by same manufacturer as the conduit, complying with NEMA TC 3 and UL 514B.

2.2 NONMETALLIC DUCTS AND DUCT ACCESSORIES

A. Manufacturers: Subject to compliance with requirements, provide products by one of the following:

1. ARNCO Corp.
2. Beck Manufacturing.
3. Cantex, Inc.
4. Or Approved Equal.

B. Duct Accessories:

1. Duct Separators: Factory-fabricated rigid PVC interlocking spacers, sized for type and sizes of ducts with which used, and selected to provide minimum duct spacings indicated while supporting ducts during concreting or backfilling.
2. Warning Tape: Underground-line warning tape specified in Section 260553 "Identification for Electrical Systems."

2.3 HANDHOLES AND BOXES OTHER THAN PRECAST CONCRETE

A. Description: Comply with SCTE 77.

1. Color: Gray.
2. Configuration: Units shall be designed for flush burial and have open bottom, unless otherwise indicated.
3. Cover: Weatherproof, secured by tamper-resistant locking devices and having structural load rating consistent with enclosure.
4. Cover Finish: Nonskid finish shall have a minimum coefficient of friction of 0.50.
5. Cover Legend: Molded lettering, "ELECTRIC."
6. Direct-Buried Wiring Entrance Provisions: Knockouts equipped with insulated bushings or end-bell fittings, selected to suit box material, sized for wiring indicated, and arranged for secure, fixed installation in enclosure wall.
7. Duct Entrance Provisions: Duct-terminating fittings shall mate with entering ducts for secure, fixed installation in enclosure wall.
8. Handholes 12 inches wide by 24 inches long x 30” deep and larger shall have factory-installed inserts for cable racks and pulling-in irons.

B. Polymer Concrete Handholes and Boxes with Polymer Concrete Cover: Molded of sand and aggregate, bound together with a polymer resin, and reinforced with steel or fiberglass or a combination of the two.

1. Manufacturers: Subject to compliance with requirements, provide products by one of the following:

a. Armorcast Products Company.
b. Carson Industries LLC.
c. CDR Systems Corporation.
d. Or Approved Equal.

PART 3 - EXECUTION

3.1 UNDERGROUND DUCT APPLICATION

A. Ducts for Electrical Feeders 600 V and Less: RNC, NEMA Type EPC-80-PVC.

B. Ducts for Electrical Branch Circuits: RNC, NEMA Type EPC-80-PVC.

3.2 UNDERGROUND ENCLOSURE APPLICATION

A. Handholes and Boxes for 600 V and Less, Including Telephone, Communications, and Data Wiring:

1. Units in Roadways and Other Deliberate Traffic Paths: Precast concrete. AASHTO HB 17, H-20 structural load rating.
2. Units in Driveway, Parking Lot, and Off-Roadway Locations, Subject to Occasional, Nondeliberate Loading by Heavy Vehicles: Precast concrete, AASHTO HB 17, H-20 structural load rating.
3. Units in Sidewalk and Similar Applications with a Safety Factor for Nondeliberate Loading by Vehicles: Heavy-duty fiberglass units with polymer concrete frame and cover, SCTE 77, Tier 8 structural load rating.
4. Units Subject to Light-Duty Pedestrian Traffic Only: High-density plastic, structurally tested according to SCTE 77 with 3000-lbf (13 345-N) vertical loading.

3.3 EARTHWORK

A. Excavation and Backfill: Comply with Section 312000 "Earth Moving," but do not use heavy-duty, hydraulic-operated, compaction equipment.

B. Restore surface features at areas disturbed by excavation and reestablish original grades, unless otherwise indicated. Replace removed sod immediately after backfilling is completed.

C. Restore areas disturbed by trenching, storing of dirt, cable laying, and other work. Restore vegetation and include necessary topsoiling, fertilizing, liming, seeding, sodding, sprigging, and mulching. Comply with Section 329200 "Turf and Grasses" and Section 329300 "Plants."

D. Cut and patch existing pavement in the path of underground ducts and utility structures according to Section 017329 "Cutting and Patching."

3.4 DUCT INSTALLATION

A. Slope: Pitch ducts a minimum slope of 1:300 down toward handholes and away from buildings and equipment. Slope ducts from a high point in runs between two handholes to drain in both directions.

B. Curves and Bends: Use 5-degree angle couplings for small changes in direction. Use manufactured long sweep bends with a minimum radius of 48 inches, both horizontally and vertically, at other locations, unless otherwise indicated.

C. Joints: Use solvent-cemented joints in ducts and fittings and make watertight according to manufacturer's written instructions. Stagger couplings so those of adjacent ducts do not lie in same plane.

D. Building Wall Penetrations: Make a transition from underground duct to rigid steel conduit at least 10 feet (3 m) outside the building wall without reducing duct line slope away from the building, and without forming a trap in the line. Use fittings manufactured for duct-to-conduit transition. Install conduit penetrations of building walls as specified in Section 260544 "Sleeves and Sleeve Seals for Electrical Raceways and Cabling."

E. Sealing: Provide temporary closure at terminations of ducts that have cables pulled. Seal spare ducts at terminations. Use sealing compound and plugs to withstand at least 15-psig hydrostatic pressure.

F. Pulling Cord: Install 100-lbf test nylon cord in ducts, including spares.

3.5 INSTALLATION OF HANDHOLES AND BOXES OTHER THAN PRECAST CONCRETE

A. Install handholes and boxes level and plumb and with orientation and depth coordinated with connecting ducts to minimize bends and deflections required for proper entrances. Use box extension if required to match depths of ducts, and seal joint between box and extension as recommended by the manufacturer.

B. Unless otherwise indicated, support units on a level bed of crushed stone or gravel, graded from 1/2-inch sieve to No. 4 sieve and compacted to same density as adjacent undisturbed earth.

C. Elevation: In paved areas and trafficways, set so cover surface will be flush with finished grade. Set covers of other handholes 1 inch above finished grade.

D. Install handholes and boxes with bottom below the frost line, below grade.

E. Install removable hardware, including pulling eyes, cable stanchions, cable arms, and insulators, as required for installation and support of cables and conductors and as indicated. Select arm lengths to be long enough to provide spare space for future cables, but short enough to preserve adequate working clearances in the enclosure.

F. Field-cut openings for ducts and conduits according to enclosure manufacturer's written instructions. Cut wall of enclosure with a tool designed for material to be cut. Size holes for terminating fittings to be used, and seal around penetrations after fittings are installed.

G. For enclosures installed in asphalt paving and subject to occasional, nondeliberate, heavy-vehicle loading, form and pour a concrete ring encircling, and in contact with, enclosure and with top surface screeded to top of box cover frame. Bottom of ring shall rest on compacted earth.

1. Concrete: 3000 psi (20 kPa), 28-day strength, complying with Section 033000 "Cast-in-Place Concrete," with a troweled finish.
2. Dimensions: 10 inches wide by 12 inches deep.

3.6 GROUNDING

A. Ground underground ducts and utility structures according to Section 260526 "Grounding and Bonding for Electrical Systems."

3.7 FIELD QUALITY CONTROL

A. Perform the following tests and inspections and prepare test reports:

1. Demonstrate capability and compliance with requirements on completion of installation of underground ducts and utility structures.
2. Pull aluminum or wood test mandrel through duct to prove joint integrity and test for out-of-round duct. Provide mandrel equal to 80 percent fill of duct. If obstructions are indicated, remove obstructions and retest.
3. Test handhole grounding to ensure electrical continuity of grounding and bonding connections. Measure and report ground resistance as specified in Section 260526 "Grounding and Bonding for Electrical Systems."

B. Correct deficiencies and retest as specified above to demonstrate compliance.

3.8 CLEANING

A. Pull leather-washer-type duct cleaner, with graduated washer sizes, through full length of ducts. Follow with rubber duct swab for final cleaning and to assist in spreading lubricant throughout ducts.

END OF SECTION 260543

SECTION 260544 - SLEEVES AND SLEEVE SEALS FOR ELECTRICAL RACEWAYS AND CABLING

PART 1 - GENERAL

1.1 RELATED DOCUMENTS

A. Drawings and general provisions of the Contract, including General and Supplementary Conditions and Division 01 Specification Sections, apply to this Section.

1.2 SUMMARY

A. Section Includes:

1. Sleeves for raceway and cable penetration of non-fire-rated construction walls and floors.
2. Sleeve-seal systems.
3. Sleeve-seal fittings.
4. Grout.
5. Silicone sealants.

B. Related Requirements:

1. Section 078413 "Penetration Firestopping" for penetration firestopping installed in fire-resistance-rated walls, horizontal assemblies, and smoke barriers, with and without penetrating items.

1.3 ACTION SUBMITTALS

A. Product Data: For each type of product.

PART 2 - PRODUCTS

2.1 SLEEVES

A. Wall Sleeves:

1. Steel Pipe Sleeves: ASTM A 53/A 53M, Type E, Grade B, Schedule 40, zinc coated, plain ends.
2. Cast-Iron Pipe Sleeves: Cast or fabricated "wall pipe," equivalent to ductile-iron pressure pipe, with plain ends and integral waterstop unless otherwise indicated.

B. Sleeves for Conduits Penetrating Non-Fire-Rated Gypsum Board Assemblies: Galvanized-steel sheet; 0.0239-inch minimum thickness; round tube closed with welded longitudinal joint, with tabs for screw-fastening the sleeve to the board.

2.2 SLEEVE-SEAL SYSTEMS

A. Description: Modular sealing device, designed for field assembly, to fill annular space between sleeve and raceway or cable.

1. Manufacturers: Subject to compliance with requirements, provide products by one of the following:

   a. Advance Products & Systems, Inc.
   b. CALPICO, Inc.
   c. Metraflex Company (The).
   d. Or Approved Equal.

2. Sealing Elements: EPDM rubber interlocking links shaped to fit surface of pipe. Include type and number required for pipe material and size of pipe.
3. Pressure Plates: Plastic Stainless steel.
4. Connecting Bolts and Nuts: Stainless steel of length required to secure pressure plates to sealing elements.

2.3 SLEEVE-SEAL FITTINGS

A. Description: Manufactured plastic, sleeve-type, waterstop assembly made for embedding in concrete slab or wall. Unit shall have plastic or rubber waterstop collar with center opening to match piping OD.

1. Manufacturers: Subject to compliance with requirements, provide products by one of the following:

   a. Presealed Systems.
   b. Or Approved Equal.

2.4 GROUT

A. Description: Nonshrink; recommended for interior and exterior sealing openings in non-fire-rated walls or floors.

B. Standard: ASTM C 1107/C 1107M, Grade B, post-hardening and volume-adjusting, dry, hydraulic-cement grout.

C. Design Mix: 5000-psi, 28-day compressive strength.

D. Packaging: Premixed and factory packaged.

2.5 SILICONE SEALANTS

A. Silicone Sealants: Single-component, silicone-based, neutral-curing elastomeric sealants of grade indicated below.

1. Grade: Pourable (self-leveling) formulation for openings in floors and other horizontal surfaces that are not fire rated.
2. Sealant shall have VOC content of g/L or less when calculated according to 40 CFR 59, Subpart D (EPA Method 24).
3. Sealant shall comply with the testing and product requirements of the California Department of Health Services' "Standard Practice for the Testing of Volatile Organic Emissions from Various Sources Using Small-Scale Environmental Chambers."

B. Silicone Foams: Multicomponent, silicone-based liquid elastomers that, when mixed, expand and cure in place to produce a flexible, nonshrinking foam.

PART 3 - EXECUTION

3.1 SLEEVE INSTALLATION FOR NON-FIRE-RATED ELECTRICAL PENETRATIONS

A. Comply with NECA 1.

B. Sleeves for Conduits Penetrating Above-Grade Non-Fire-Rated Concrete and Masonry-Unit Floors and Walls:

1. Interior Penetrations of Non-Fire-Rated Walls and Floors:

   a. Seal annular space between sleeve and raceway or cable, using joint sealant appropriate for size, depth, and location of joint. Comply with requirements in Section 079200 "Joint Sealants."
   b. Seal space outside of sleeves with mortar or grout. Pack sealing material solidly between sleeve and wall so no voids remain. Tool exposed surfaces smooth; protect material while curing.

2. Use pipe sleeves unless penetration arrangement requires rectangular sleeved opening.
3. Size pipe sleeves to provide 1/4-inch annular clear space between sleeve and raceway or cable unless sleeve seal is to be installed.
4. Install sleeves for wall penetrations unless core-drilled holes or formed openings are used. Install sleeves during erection of walls. Cut sleeves to length for mounting flush with both surfaces of walls. Deburr after cutting.
5. Install sleeves for floor penetrations. Extend sleeves installed in floors 2 inches above finished floor level. Install sleeves during erection of floors.

C. Sleeves for Conduits Penetrating Non-Fire-Rated Gypsum Board Assemblies:

1. Use circular metal sleeves unless penetration arrangement requires rectangular sleeved opening.
2. Seal space outside of sleeves with approved joint compound for gypsum board assemblies.

D. Aboveground, Exterior-Wall Penetrations: Seal penetrations using steel pipe sleeves and mechanical sleeve seals. Select sleeve size to allow for 1-inch annular clear space between pipe and sleeve for installing mechanical sleeve seals.

E. Underground, Exterior-Wall and Floor Penetrations: Install cast-iron pipe sleeves. Size sleeves to allow for 1-inch annular clear space between raceway or cable and sleeve for installing sleeve-seal system.

3.2 SLEEVE-SEAL-SYSTEM INSTALLATION

A. Install sleeve-seal systems in sleeves in exterior concrete walls and slabs-on-grade at raceway entries into building.

B. Install type and number of sealing elements recommended by manufacturer for raceway or cable material and size. Position raceway or cable in center of sleeve. Assemble mechanical sleeve seals and install in annular space between raceway or cable and sleeve. Tighten bolts against pressure plates that cause sealing elements to expand and make watertight seal.

3.3 SLEEVE-SEAL-FITTING INSTALLATION

A. Install sleeve-seal fittings in new walls and slabs as they are constructed.

B. Assemble fitting components of length to be flush with both surfaces of concrete slabs and walls. Position waterstop flange to be centered in concrete slab or wall.

C. Secure nailing flanges to concrete forms.

D. Using grout, seal the space around outside of sleeve-seal fittings.

END OF SECTION 260544

SECTION 260553 - IDENTIFICATION FOR ELECTRICAL SYSTEMS

PART 1 - GENERAL

1.1 RELATED DOCUMENTS

A. Drawings and general provisions of the Contract, including General and Supplementary Conditions and Division 01 Specification Sections, apply to this Section.

1.2 SUMMARY

A. Section Includes:

1. Identification for raceways.
2. Identification of power and control cables.
3. Identification for conductors.
4. Underground-line warning tape.
5. Warning labels and signs.
6. Instruction signs.
7. Equipment identification labels.
8. Miscellaneous identification products.

1.3 ACTION SUBMITTALS

A. Product Data: For each electrical identification product indicated.

B. Samples: For each type of label and sign to illustrate size, colors, lettering style, mounting provisions, and graphic features of identification products.

C. Identification Schedule: An index of nomenclature of electrical equipment and system components used in identification signs and labels.

1.4 QUALITY ASSURANCE

A. Comply with ANSI A13.1 and IEEE C2.

B. Comply with NFPA 70.

C. Comply with 29 CFR 1910.144 and 29 CFR 1910.145.

D. Comply with ANSI Z535.4 for safety signs and labels.

E. Adhesive-attached labeling materials, including label stocks, laminating adhesives, and inks used by label printers, shall comply with UL 969.

1.5 COORDINATION

A. Coordinate identification names, abbreviations, colors, and other features with requirements in other Sections requiring identification applications, Drawings, Shop Drawings, manufacturer's wiring diagrams, and the Operation and Maintenance Manual; and with those required by codes, standards, and 29 CFR 1910.145. Use consistent designations throughout Project.

B. Coordinate installation of identifying devices with completion of covering and painting of surfaces where devices are to be applied.

C. Coordinate installation of identifying devices with location of access panels and doors.

D. Install identifying devices before installing acoustical ceilings and similar concealment.

PART 2 - PRODUCTS

2.1 POWER AND CONTROL RACEWAY IDENTIFICATION MATERIALS

A. Comply with ANSI A13.1 for minimum size of letters for legend and for minimum length of color field for each raceway size.

B. Colors for Raceways Carrying Circuits at 600 V or Less:

1. Black letters on an orange field.
2. Legend: Indicate voltage and system type.

C. Snap-Around Labels for Raceways Carrying Circuits at 600 V or Less: Slit, pretensioned, flexible, preprinted, color-coded acrylic sleeve, with diameter sized to suit diameter of raceway or cable it identifies and to stay in place by gripping action.

2.2 ARMORED AND METAL-CLAD CABLE IDENTIFICATION MATERIALS

A. Comply with ANSI A13.1 for minimum size of letters for legend and for minimum length of color field for each cable size.

B. Colors for Cables Carrying Circuits at 600 V and Less:

1. Black letters on an orange field.
2. Legend: Indicate voltage and system type.

2.3 POWER AND CONTROL CABLE IDENTIFICATION MATERIALS

A. Comply with ANSI A13.1 for minimum size of letters for legend and for minimum length of color field for each cable size.

B. Snap-Around Labels: Slit, pretensioned, flexible, preprinted, color-coded acrylic sleeve, with diameter sized to suit diameter of cable it identifies and to stay in place by gripping action.

2.4 CONDUCTOR IDENTIFICATION MATERIALS

A. Color-Coding Conductor Tape: Colored, self-adhesive vinyl tape not less than 3 mils thick by 1 to 2 inches wide.

B. Heat-Shrink Preprinted Tubes: Flame-retardant polyolefin tube with machine-printed identification label. Sized to suit diameter of and shrinks to fit firmly around conductor it identifies. Full shrink recovery at a maximum of 200 deg F (93 deg C). Comply with UL 224.

2.5 UNDERGROUND-LINE WARNING TAPE

A. Tape:

1. Recommended by manufacturer for the method of installation and suitable to identify and locate underground electrical and communications utility lines.
2. Printing on tape shall be permanent and shall not be damaged by burial operations.
3. Tape material and ink shall be chemically inert, and not subject to degrading when exposed to acids, alkalis, and other destructive substances commonly found in soils.

B. Color and Printing:

1. Comply with ANSI Z535.1 through ANSI Z535.5.
2. Inscriptions for Red-Colored Tapes: ELECTRIC LINE.
3. Inscriptions for Orange-Colored Tapes: OPTICAL FIBER CABLE.

C. Tag: Type I:

1. Pigmented polyolefin, bright-colored, continuous-printed on one side with the inscription of the utility, compounded for direct-burial service.
2. Thickness: 4 mils (0.1 mm).
3. Weight: 18.5 lb/1000 sq. ft. (9.0 kg/100 sq. m).
4. 3-Inch (75-mm) Tensile According to ASTM D 882: 30 lbf (133.4 N), and 2500 psi (17.2 MPa).

2.6 EQUIPMENT IDENTIFICATION LABELS

A. Engraved, Laminated Acrylic or Melamine Label: Punched or drilled for screw mounting. White letters on a dark-gray background. Minimum letter height shall be 3/8 inch.

2.7 CABLE TIES

A. General-Purpose Cable Ties: Fungus inert, self extinguishing, one piece, self locking, Type 6/6 nylon.

1. Minimum Width: 3/16 inch.
2. Tensile Strength at 73 deg F, According to ASTM D 638: 12,000 psi.
3. Temperature Range: Minus 40 to plus 185 deg F.
4. Color: Black except where used for color-coding.

B. UV-Stabilized Cable Ties: Fungus inert, designed for continuous exposure to exterior sunlight, self extinguishing, one piece, self locking, Type 6/6 nylon.

1. Minimum Width: 3/16 inch.
2. Tensile Strength at 73 deg F, According to ASTM D 638: 12,000 psi.
3. Temperature Range: Minus 40 to plus 185 deg F.
4. Color: Black.

2.8 MISCELLANEOUS IDENTIFICATION PRODUCTS

A. Paint: Comply with requirements in painting Sections for paint materials and application requirements. Select paint system applicable for surface material and location (exterior or interior).

B. Fasteners for Labels and Signs: Self-tapping, stainless-steel screws or stainless-steel machine screws with nuts and flat and lock washers.

PART 3 - EXECUTION

3.1 INSTALLATION

A. Verify identity of each item before installing identification products.

B. Location: Install identification materials and devices at locations for most convenient viewing without interference with operation and maintenance of equipment.

C. Apply identification devices to surfaces that require finish after completing finish work.

D. Attach signs and plastic labels that are not self-adhesive type with mechanical fasteners appropriate to the location and substrate.

E. Attach plastic raceway and cable labels that are not self-adhesive type with clear vinyl tape with adhesive appropriate to the location and substrate.

F. System Identification Color-Coding Bands for Raceways and Cables: Each color-coding band shall completely encircle cable or conduit. Place adjacent bands of two-color markings in

contact, side by side. Locate bands at changes in direction, at penetrations of walls and floors, at 50-foot maximum intervals in straight runs, and at 25-foot maximum intervals in congested areas.

G. Aluminum Wraparound Marker Labels and Metal Tags: Secure tight to surface of conductor or cable at a location with high visibility and accessibility.

H. Cable Ties: For attaching tags. Use general-purpose type, except as listed below:

1. Outdoors: UV-stabilized nylon.

I. Underground-Line Warning Tape: During backfilling of trenches install continuous underground-line warning tape directly above line at 6 to 8 inches below finished grade. Use multiple tapes where width of multiple lines installed in a common trench exceeds 16 inches overall.

J. Painted Identification: Comply with requirements in painting Sections for surface preparation and paint application.

3.2 IDENTIFICATION SCHEDULE

A. Power-Circuit Conductor Identification, 600 V or Less: For conductors in vaults, pull and junction boxes, manholes, and handholes, use color-coding conductor tape to identify the phase.

1. Color-Coding for Phase and Voltage Level Identification, 600 V or Less: Use colors listed below for ungrounded service feeder and branch-circuit conductors.

a. Color shall be factory applied or field applied for sizes larger than No. 8 AWG, if authorities having jurisdiction permit.

b. Colors for 208/120-V Circuits:

1) Phase A: Black.
2) Phase B: Red.
3) Phase C: Blue.

c. Colors for 480/277-V Circuits:

1) Phase A: Brown.
2) Phase B: Orange.
3) Phase C: Yellow.

d. Field-Applied, Color-Coding Conductor Tape: Apply in half-lapped turns for a minimum distance of 6 inches from terminal points and in boxes where splices or taps are made. Apply last two turns of tape with no tension to prevent possible unwinding. Locate bands to avoid obscuring factory cable markings.

B. Install instructional sign including the color-code for grounded and ungrounded conductors using adhesive-film-type labels.

C. Control-Circuit Conductor Identification: For conductors and cables in pull and junction boxes, manholes, and handholes, use self-adhesive vinyl labels with the conductor or cable designation, origin, and destination.

D. Control-Circuit Conductor Termination Identification: For identification at terminations provide self-adhesive vinyl labels with the conductor designation.

1. Identify conductors, cables, and terminals in enclosures and at junctions, terminals, and pull points. Identify by system and circuit designation.
2. Use system of marker tape designations that is uniform and consistent with system used by manufacturer for factory-installed connections.
3. Coordinate identification with Project Drawings, manufacturer's wiring diagrams, and the Operation and Maintenance Manual.

E. Locations of Underground Lines: Identify with underground-line warning tape for power, lighting, communication, and control wiring and optical fiber cable.

F. Equipment Identification Labels: On each unit of equipment, install unique designation label that is consistent with wiring diagrams, schedules, and the Operation and Maintenance Manual. Apply labels to disconnect switches and protection equipment, central or master units, control panels, control stations, terminal cabinets, and racks of each system. Systems include power, lighting, control, communication, signal, monitoring, and alarm systems unless equipment is provided with its own identification.

1. Labeling Instructions:

   a. Indoor Equipment: Self-adhesive, engraved, laminated acrylic or melamine label.

2. Equipment to Be Labeled:

   a. Panelboards: Typewritten directory of circuits in the location provided by panelboard manufacturer. Panelboard identification shall be engraved, laminated acrylic or melamine label.
   b. Enclosures and electrical cabinets.
   c. Access doors and panels for concealed electrical items.
   d. Disconnect switches.
   e. Handholes.
   f. Weatherproof enclosures.

END OF SECTION 260553

SECTION 264313 - TRANSIENT-VOLTAGE SUPPRESSION FOR LOW-VOLTAGE ELECTRICAL POWER CIRCUITS

PART 1 - GENERAL

1.1 RELATED DOCUMENTS

A. Drawings and general provisions of the Contract, including General and Supplementary Conditions and Division 01 Specification Sections, apply to this Section.

1.2 SUMMARY

A. Section includes field-mounted TVSS for low-voltage (120 to 600 V) power distribution and control equipment.

1.3 DEFINITIONS

A. ATS: Acceptance Testing Specifications.

B. SVR: Suppressed voltage rating.

C. TVSS: Transient voltage surge suppressor(s), both singular and plural; also, transient voltage surge suppression.

1.4 ACTION SUBMITTALS

A. Product Data: For each type of product indicated. Include rated capacities, operating weights, electrical characteristics, furnished specialties, and accessories.

1.5 INFORMATIONAL SUBMITTALS

A. Qualification Data: For qualified testing agency.

B. Product Certificates: For TVSS devices, from manufacturer.

C. Field quality-control reports.

D. Warranties: Sample of special warranties.

1.6 CLOSEOUT SUBMITTALS

A. Operation and Maintenance Data: For TVSS devices to include in emergency, operation, and maintenance manuals.

1.7 MAINTENANCE MATERIAL SUBMITTALS

A. Furnish extra materials that match products installed and that are packaged with protective covering for storage and identified with labels describing contents.

1. Replaceable Protection Modules: One of each size and type installed.

1.8 QUALITY ASSURANCE

A. Testing Agency Qualifications: Member company of NETA or an NRTL.

1. Testing Agency's Field Supervisor: Currently certified by NETA to supervise on-site testing.

B. Electrical Components, Devices, and Accessories: Listed and labeled as defined in NFPA 70, by a testing agency, and marked for intended location and application.

C. Comply with IEEE C62.41.2 and test devices according to IEEE C62.45.

D. Comply with NEMA LS 1.

E. Comply with UL 1283 and UL 1449.

F. Comply with NFPA 70.

1.9 PROJECT CONDITIONS

A. Interruption of Existing Electrical Service: Do not interrupt electrical service to facilities occupied by Owner or others unless permitted under the following conditions and then only after arranging to provide temporary electrical service according to requirements indicated:

1. Notify Owner no fewer than two days in advance of proposed electrical service interruptions.
2. Do not proceed with interruption of electrical service without Owner's written permission.

B. Service Conditions: Rate TVSS devices for continuous operation under the following conditions unless otherwise indicated:

1. Maximum Continuous Operating Voltage: Not less than 115 percent of nominal system operating voltage.
2. Operating Temperature: -40 to 158 deg F.

3. Humidity: 5 to 95 percent, noncondensing.
4. Altitude: Less than 20,000 feet (6090 m) above sea level.

1.10 COORDINATION

A. Coordinate location of field-mounted TVSS devices to allow adequate clearances for maintenance.

1.11 WARRANTY

A. Special Warranty: Manufacturer's standard form in which manufacturer agrees to repair or replace components of surge suppressors that fail in materials or workmanship within specified warranty period.

1. Warranty Period seven years from date of Substantial Completion.

PART 2 - PRODUCTS

2.1 SERVICE ENTRANCE SUPPRESSORS

A. Surge Protection Devices:

1. Comply with UL 1449.
2. Non-modular design.
3. Fuses, rated at 200-kA interrupting capacity.
4. Fabrication using bolted compression lugs for internal wiring.
5. Integral disconnect switch.
6. Redundant suppression circuits.
7. Redundant replaceable modules.
8. Arrangement with copper bus bars and for bolted connections to phase buses, neutral bus, and ground bus.
9. Arrangement with wire connections to phase buses, neutral bus, and ground bus.
10. LED indicator lights for power and protection status.
11. Audible alarm, with silencing switch, to indicate when protection has failed.
12. Form-C contacts rated at 5 A and 250-V ac, one normally open and one normally closed, for remote monitoring of protection status. Contacts shall reverse on failure of any surge diversion module or on opening of any current-limiting device. Coordinate with building power monitoring and control system.
13. Four-digit transient-event counter set to totalize transient surges.

B. Peak Single-Impulse Surge Current Rating: 60 kA per mode/120 kA per phase.

C. Minimum single impulse current ratings, using 8-by-20-mic.sec waveform described in IEEE C62.41.2

1. Line to Neutral: 70,000 A.
2. Line to Ground: 70,000 A.
3. Neutral to Ground: 50,000 A.

D. Protection modes and UL 1449 SVR for grounded wye circuits with 480Y/277 V, 3-phase, 4-wire circuits shall be as follows:

1. Line to Neutral: 800 V for 480Y/277 V.
2. Line to Ground: 800 V for 480Y/277 V.
3. Neutral to Ground: 800 V for 480Y/277 V.

E. Protection modes and UL 1449 SVR for 240/120-V, 3-phase, 4-wire circuits with high leg shall be as follows:

1. Line to Neutral: 400 V, 800 V from high leg.
2. Line to Ground: 400 V.
3. Neutral to Ground: 400 V.

F. Protection modes and UL 1449 SVR for 240 V, 480 V, or 600 V, 3-phase, 3-wire, delta circuits shall be as follows:

1. Line to Line: 2000 V for 480 V.
2. Line to Ground: 2000 V for 480 V.

2.2 ENCLOSURES

A. Indoor Enclosures: NEMA 250 Type 4.

PART 3 - EXECUTION

3.1 INSTALLATION

A. Install TVSS devices for panelboards and auxiliary panels with conductors or buses between suppressor and points of attachment as short and straight as possible. Do not exceed manufacturer's recommended lead length. Do not bond neutral and ground.

1. Provide multiple, 30-A circuit breaker as a dedicated disconnecting means for TVSS unless otherwise indicated.

3.2 FIELD QUALITY CONTROL

A. Testing Agency: Engage a qualified testing agency to perform tests and inspections.

B. Manufacturer's Field Service: Engage a factory-authorized service representative to inspect, test, and adjust components, assemblies, and equipment installations, including connections.

1. Verify that electrical wiring installation complies with manufacturer's written installation requirements.

C. Perform tests and inspections.

1. Manufacturer's Field Service: Engage a factory-authorized service representative to inspect components, assemblies, and equipment installations, including connections, and to assist in testing.

D. Tests and Inspections:

1. Perform each visual and mechanical inspection and electrical test stated in NETA ATS, "Surge Arresters, Low-Voltage Surge Protection Devices" Section. Certify compliance with test parameters.
2. After installing TVSS devices but before electrical circuitry has been energized, test for compliance with requirements.
3. Complete startup checks according to manufacturer's written instructions.

E. TVSS device will be considered defective if it does not pass tests and inspections.

F. Prepare test and inspection reports.

3.3 STARTUP SERVICE

A. Do not energize or connect panelboards to their sources until TVSS devices are installed and connected.

B. Do not perform insulation resistance tests of the distribution wiring equipment with the TVSS installed. Disconnect before conducting insulation resistance tests, and reconnect immediately after the testing is over.

3.4 DEMONSTRATION

A. Engage a factory-authorized service representative to train Owner's maintenance personnel to maintain TVSS devices.

END OF SECTION 264313

SECTION 265600 – EXTERIOR LIGHTING

PART 1 - GENERAL

1.0 DESCRIPTION

A. The Contractor will provide and install flood light fixtures, cobra head fixtures, building entrance downlights, and associated accessories, conduit and wiring as indicated on the Plans

1.1 RELATED DOCUMENTS

A. Drawings and general provisions of the Contract, including General and Supplementary Conditions and Division 01 Specification Sections, apply to this Section.

1.2 SUMMARY

A. Section Includes:

1. Exterior luminaires with lamps and drivers.
2. Poles and accessories.

1.3 DEFINITIONS

A. CCT: Correlated color temperature.

B. CRI: Color-rendering index.

B. LER: Luminaire efficacy rating.

C. Luminaire: Complete lighting fixture.

D. Pole: Luminaire support structure, including tower used for large area illumination.

1.4 STRUCTURAL ANALYSIS CRITERIA FOR POLE SELECTION

A. Dead Load: Weight of luminaire and its horizontal and vertical supports, lowering devices, and supporting structure, applied as stated in AASHTO LTS-4-M.

B. Live Load: Single load of 500 lbf (2224 N), distributed as stated in AASHTO LTS-4-M.

C. Ice Load: Load of 3 lbf/sq. ft. (145 Pa), applied as stated in AASHTO LTS-4-M Ice Load Map.

D. Wind Load: Pressure of wind on pole and luminaire and banners and banner arms, calculated and applied as stated in AASHTO LTS-4-M.

1. Basic wind speed for calculating wind load for poles 50 feet (15 m) high or less is 90 mph (40 m/s).

a. Wind Importance Factor: 1.0.
b. Minimum Design Life: 25 years.
c. Velocity Conversion Factors: 1.0.

1.5 ACTION SUBMITTALS

A. Product Data: For each luminaire, pole, and support component, arranged in order of lighting unit designation. Include data on features, accessories, finishes, and the following:

1. Physical description of luminaire, including materials, dimensions, effective projected area, and verification of indicated parameters.
2. Details of attaching luminaires and accessories.
3. Details of installation and construction.
4. Luminaire materials.
5. Photometric data based on laboratory tests of each luminaire type, complete with indicated lamps, and accessories.

a. Testing Agency Certified Data: For indicated luminaires, photometric data shall be certified by a qualified independent testing agency. Photometric data for remaining luminaires shall be certified by manufacturer.
b. Manufacturer Certified Data: Photometric data shall be certified by manufacturer's laboratory with a current accreditation under the National Voluntary Laboratory Accreditation Program for Energy Efficient Lighting Products.

6. Photoelectric relays.
7. Lamps, including life, output, CCT, CRI, lumens, and energy-efficiency data.
8. Materials, dimensions, and finishes of poles.
9. Means of attaching luminaires to supports, and indication that attachment is suitable for components involved.
10. Anchor bolts for poles.
11. Manufactured pole foundations.

B. Shop Drawings: Include plans, elevations, sections, details, and attachments to other work.

1. Detail equipment assemblies and indicate dimensions, weights, loads, required clearances, method of field assembly, components, and location and size of each field connection.
2. Anchor-bolt templates keyed to specific poles and certified by manufacturer.

3. Design calculations, certified by a qualified professional engineer, indicating strength of screw foundations and soil conditions on which they are based.
4. Wiring Diagrams: For power, signal, and control wiring.

C. Samples: For products designated for sample submission in the Exterior Lighting Device Schedule. Each Sample shall include lamps and ballasts.

1.6 INFORMATIONAL SUBMITTALS

A. Pole and Support Component Certificates: Signed by manufacturers of poles, certifying that products are designed for indicated load requirements in AASHTO LTS-4-M and that load imposed by luminaire and attachments has been included in design. The certification shall be based on design calculations by a professional engineer.

B. Qualification Data: For qualified agencies providing photometric data for lighting fixtures.

C, Field quality-control reports.

D. Warranty: Sample of special warranty.

1.7 CLOSEOUT SUBMITTALS

A. Operation and Maintenance Data: For luminaires and poles to include operation, and maintenance manuals.

1.8 MAINTENANCE MATERIAL SUBMITTALS

A. Furnish extra materials that match products installed and that are packaged with protective covering for storage and identified with labels describing contents.

1. Lamps: One for every 100 of each type and rating installed. Furnish at least one of each type.
2. Glass and Plastic Lenses, Covers, and Other Optical Parts: One for every 100 of each type and rating installed. Furnish at least one of each type.
3. Drivers: One for every 100 of each type and rating installed. Furnish at least one of each type.

1.9 QUALITY ASSURANCE

A. Luminaire Photometric Data Testing Laboratory Qualifications: Provided by manufacturers' laboratories that are accredited under the National Volunteer Laboratory Accreditation Program for Energy Efficient Lighting Products.

B. Luminaire Photometric Data Testing Laboratory Qualifications: Provided by an independent agency, with the experience and capability to conduct the testing indicated, that is an NRTL as defined by OSHA in 29 CFR 1910.

C. Electrical Components, Devices, and Accessories: Listed and labeled as defined in NFPA 70, by a qualified testing agency, and marked for intended location and application.

D. Comply with IEEE C2, "National Electrical Safety Code."

E. Comply with NFPA 70.

1.10 DELIVERY, STORAGE, AND HANDLING

A. Package aluminum poles for shipping according to ASTM B 660.

B. Store poles on decay-resistant-treated skids at least 12 inches (300 mm) above grade and vegetation. Support poles to prevent distortion and arrange to provide free air circulation.

C. Retain factory-applied pole wrappings on metal poles until right before pole installation. For poles with nonmetallic finishes, handle with web fabric straps.

1.11 WARRANTY

A. Special Warranty: Manufacturer's standard form in which manufacturer agrees to repair or replace products that fail in materials or workmanship; that corrode; or that fade, stain, perforate, erode, or chalk due to effects of weather or solar radiation within specified warranty period. Manufacturer may exclude lightning damage, hail damage, vandalism, abuse, or unauthorized repairs or alterations from special warranty coverage.

1. Warranty Period for Luminaires: Five years from date of Substantial Completion.
2. Warranty Period for Metal Corrosion: Five years from date of Substantial Completion.
3. Warranty Period for Color Retention: Five years from date of Substantial Completion.
4. Warranty Period for Poles: Repair or replace lighting poles and standards that fail in finish, materials, and workmanship within manufacturer's standard warranty period, but not less than three years from date of Substantial Completion.

PART 2 - MATERIALS

2.1 MANUFACTURERS

A. Subject to compliance with requirements, provide product indicated on Drawings

1. Flood Light Fixtures: See Appendix A for Flood Light Fixtures Specifications & Data Sheets, or as approved equal.

2. Cobra Head Light Fixtures: See Appendix B for Cobra Head Light Fixtures Specifications & Data Sheets, or as approved equal.

3. Downlights at Building Entrance: See Appendix C for Downlights at Building Entrance Light Fixtures Specifications & Data Sheets, or as approved equal.

4. Shed Light Fixture: See Appendix D for Shed Light Fixture Specifications & Data Sheets, or as approved equal.

2.2 GENERAL REQUIREMENTS FOR LUMINAIRES

A. Luminaires shall comply with UL 1598 and be listed and labeled for installation in wet locations by an NRTL acceptable to authorities having jurisdiction.

1. LER Tests LED Fixtures: Where LER is specified, test according to NEMA LE 5A.

B. Lateral Light Distribution Patterns: Comply with IESNA RP-8 for parameters of lateral light distribution patterns indicated for luminaires.

C. Metal Parts: Free of burrs and sharp corners and edges.

D. Sheet Metal Components: Corrosion-resistant aluminum unless otherwise indicated. Form and support to prevent warping and sagging.

E. Housings: Rigidly formed, weather- and light-tight enclosures that will not warp, sag, or deform in use. Provide filter/breather for enclosed luminaires.

F. Doors, Frames, and Other Internal Access: Smooth operating, free of light leakage under operating conditions, and designed to permit relamping without use of tools. Designed to prevent doors, frames, lenses, diffusers, and other components from falling accidentally during relamping and when secured in operating position. Doors shall be removable for cleaning or replacing lenses. Designed to disconnect ballast when door opens.

G. Exposed Hardware Material: Stainless steel.

H. Plastic Parts: High resistance to yellowing and other changes due to aging, exposure to heat, and UV radiation.

I. Light Shields: Metal baffles, factory installed and field adjustable, arranged to block light distribution to indicated portion of normally illuminated area or field.

J. Reflecting surfaces shall have minimum reflectance as follows unless otherwise indicated:

1. White Surfaces: 85 percent.
2. Specular Surfaces: 83 percent.
3. Diffusing Specular Surfaces: 75 percent.

K. Lenses and Refractors Gaskets: Use heat- and aging-resistant resilient gaskets to seal and cushion lenses and refractors in luminaire doors.

L. Luminaire Finish: Manufacturer's standard paint applied to factory-assembled and -tested luminaire before shipping. Where indicated, match finish process and color of pole or support materials.

M. Factory-Applied Finish for Steel Luminaires: Comply with NAAMM's "Metal Finishes Manual for Architectural and Metal Products" for recommendations for applying and designating finishes.

1. Surface Preparation: Clean surfaces to comply with SSPC-SP 1, "Solvent Cleaning," to remove dirt, oil, grease, and other contaminants that could impair paint bond. Grind welds and polish surfaces to a smooth, even finish. Remove mill scale and rust, if present, from uncoated steel, complying with SSPC-SP 5/NACE No. 1, "White Metal Blast Cleaning," or SSPC-SP 8, "Pickling."
2. Exterior Surfaces: Manufacturer's standard finish consisting of one or more coats of primer and two finish coats of high-gloss, high-build polyurethane enamel.

a. Color: As selected by Architect from manufacturer's full range.

N. Factory-Applied Finish for Aluminum Luminaires: Comply with NAAMM's "Metal Finishes Manual for Architectural and Metal Products" for recommendations for applying and designating finishes.

1. Finish designations prefixed by AA comply with the system established by the Aluminum Association for designating aluminum finishes.
2. Natural Satin Finish: Provide fine, directional, medium satin polish (AA-M32); buff complying with AA-M20; and seal aluminum surfaces with clear, hard-coat wax.
3. Class I, Clear Anodic Finish: AA-M32C22A41 (Mechanical Finish: medium satin; Chemical Finish: etched, medium matte; Anodic Coating: Architectural Class I, clear coating 0.018 mm or thicker) complying with AAMA 611.
4. Class I, Color Anodic Finish: AA-M32C22A42/A44 (Mechanical Finish: medium satin; Chemical Finish: etched, medium matte; Anodic Coating: Architectural Class I, integrally colored or electrolytically deposited color coating 0.018 mm or thicker) complying with AAMA 611.

O. Factory-Applied Labels: Comply with UL 1598. Include recommended lamps. Labels shall be located where they will be readily visible to service personnel, but not seen from normal viewing angles when lamps are in place.

2.4 GENERAL REQUIREMENTS FOR POLES AND SUPPORT COMPONENTS

A. Structural Characteristics: Comply with AASHTO LTS-4-M.

1. Wind-Load Strength of Poles: Adequate at indicated heights above grade without failure, permanent deflection, or whipping in steady winds of speed indicated in "Structural Analysis Criteria for Pole Selection" Article.

2. Strength Analysis: For each pole, multiply the actual equivalent projected area of luminaires and brackets by a factor of 1.1 to obtain the equivalent projected area to be used in pole selection strength analysis.

B. Luminaire Attachment Provisions: Comply with luminaire manufacturers' mounting requirements. Use stainless-steel fasteners and mounting bolts unless otherwise indicated.

C. Mountings, Fasteners, and Appurtenances: Corrosion-resistant items compatible with support components.

1. Materials: Shall not cause galvanic action at contact points.
2. Anchor Bolts, Leveling Nuts, Bolt Caps, and Washers: Hot-dip galvanized after fabrication unless otherwise indicated.
3. Anchor-Bolt Template: Plywood or steel.

D. Handhole: Oval-shaped, with minimum clear opening of 2-1/2 by 5 inches (65 by 130 mm), with cover secured by stainless-steel captive screws. Provide on all.

E. Concrete Pole Foundations: Cast in place, with anchor bolts to match pole-base flange. Concrete, reinforcement, and formwork are specified in Section 033000 "Cast-in-Place Concrete."

2.5 EXECUTION

3.1 LUMINAIRE INSTALLATION

P. Install lamps in each luminaire.

Q. Fasten luminaire to indicated structural supports.

1. Use fastening methods and materials selected to resist seismic forces defined for the application and approved by manufacturer.

R. Adjust luminaires that require field adjustment or aiming.

1.2 POLE INSTALLATION

A. Underground features unless otherwise indicated on Drawings:

B. Concrete Pole Foundations: Set anchor bolts according to anchor-bolt templates furnished by pole manufacturer. Concrete materials, installation, and finishing requirements are specified in Concrete Specification Section.

C. Foundation-Mounted Poles: Mount pole with leveling nuts, and tighten top nuts to torque level recommended by pole manufacturer.

1. Use anchor bolts and nuts selected to resist seismic forces defined for the application and approved by manufacturer.
2. Grout void between pole base and foundation. Use nonshrink or expanding concrete grout firmly packed to fill space.
3. Install base covers unless otherwise indicated.
4. Use a short piece of 1/2-inch- (13-mm-) diameter pipe to make a drain hole through grout. Arrange to drain condensation from interior of pole.

3.4 INSTALLATION OF INDIVIDUAL GROUND-MOUNTING LUMINAIRES

A. Install on concrete base with top 4 inches (100 mm) above finished grade or surface at luminaire location. Cast conduit into base, and finish by troweling and rubbing smooth. Concrete materials, installation, and finishing are specified in Concrete Specification Section.

3.5 CORROSION PREVENTION

A. Aluminum: Do not use in contact with earth or concrete. When in direct contact with a dissimilar metal, protect aluminum by insulating fittings or treatment.

B. Steel Conduits: Comply with Section 260533 "Raceways and Boxes for Electrical Systems." In concrete foundations, wrap conduit with 0.010-inch- (0.254-mm-) thick, pipe-wrapping plastic tape applied with a 50 percent overlap.

3.6 GROUNDING

A. Ground metal poles and support structures according to Section 260526 "Grounding and Bonding for Electrical Systems."

1. Install grounding electrode for each pole unless otherwise indicated.
2. Install grounding conductor pigtail in the base for connecting luminaire to grounding system.

B. Ground nonmetallic poles and support structures according to Section 260526 "Grounding and Bonding for Electrical Systems."

1. Install grounding electrode for each pole.
2. Install grounding conductor and conductor protector.
3. Ground metallic components of pole accessories and foundations.

3.7 FIELD QUALITY CONTROL

A. Inspect each installed fixture for damage. Replace damaged fixtures and components.

B. Illumination Observations: Verify normal operation of lighting units after installing luminaires and energizing circuits with normal power source.

1. Verify operation of photoelectric controls.

C. Illumination Tests:

1. Measure light intensities at night. Use photometers with calibration referenced to NIST standards. Comply with the following IESNA testing guide(s):

S. Prepare a written report of tests, inspections, observations, and verifications indicating and interpreting results. If adjustments are made to lighting system, retest to demonstrate compliance with standards.

3.8 DEMONSTRATION

A. Train Owner's maintenance personnel to adjust, operate, and maintain luminaire lowering devices.

PART 4 – METHOD OF MEASUREMENT

4.1 METHOD OF MEASUREMENT

A. The quantity to be paid for under this Item will be measured on a lump sum basis for quantity and locations of equipment to be provided and installed as indicated on Plans.

PART 5 – BASIS OF PAYMENTS

5.1 BASIS OF PAYMENTS

B. Payment shall be made under the lump sum amount for removing, furnishing, installing, connecting and testing all electrical and lighting work. The stipulated price shall include all work necessary and required for work as indicated and implied on the contract drawings and specified herein.

C. The lump sum price bid shall cover the cost of removing existing lighting, storing, testing, furnishing and installing all required items including, but not limited to, conductors, conduits, ductbank, splices, terminations, electrical components, hardware, concrete footings, junction boxes, panels boards, trenching, incidentals, all labor and materials necessary and for the completion of this work as indicated on the drawings, implied and as specified herein, or as by the Engineer and to his complete satisfaction.

D. Progress payments will be made as follows: A 40% payment will be made when 50% of the work has been placed; a second 40% payment will be made when 100% of the work has been placed; the final 20% payment will be made when the work is completed and accepted by the Engineer.

E. Costs for concrete pads for panel boards shall be paid for under Item 28 – Cement Concrete Driveways and Aprons and pavement and lawn restoration shall be paid for under various contract items. Cost for trenching and backfill is included under this item.

END OF SECTION 265600

SECTION 280513 - CONDUCTORS AND CABLES FOR ELECTRONIC SAFETY AND SECURITY – WIRELESS DATA TRANSMISSION SYSTEM

PART 1 - GENERAL

1.1 RELATED DOCUMENTS

A. Drawings and general provisions of the Contract, including General and Supplementary Conditions and Division 01 Specification Sections, apply to this Section.

1.2 SUMMARY

A. Section Includes:

1. UTP cabling.
2. 62.5/125-micrometer, multimode optical fiber cabling.
3. Coaxial cabling.
4. RS-232 cabling.
5. RS-485 cabling.
6. Identification products.

1.3 DEFINITIONS

A. BICSI: Building Industry Consulting Service International.

B. EMI: Electromagnetic interference.

C. IDC: Insulation displacement connector.

D. Low Voltage: As defined in NFPA 70 for circuits and equipment operating at less than 50 V or for remote-control and signaling power-limited circuits.

E. Open Cabling: Passing telecommunications cabling through open space (e.g., between the studs of a wall cavity).

F. RCDD: Registered Communications Distribution Designer.

1.4 ACTION SUBMITTALS

A. Product Data: For each type of product.

1. For coaxial cable, include the following installation data for each type used:

a. Nominal OD.
b. Minimum bending radius.
c. Maximum pulling tension.

1.5 INFORMATIONAL SUBMITTALS

A. Qualification Data: For qualified layout technician, installation supervisor, and field inspector.

B. Source quality-control reports.

C. Field quality-control reports.

1.6 QUALITY ASSURANCE

A. Testing Agency Qualifications: An NRTL.

1. Testing Agency's Field Supervisor: Currently certified by BICSI as an RCDD to supervise on-site testing.

1.7 DELIVERY, STORAGE, AND HANDLING

A. Test cables upon receipt at Project site.

1. Test optical fiber cable to determine the continuity of the strand end to end. Use optical fiber flashlight or optical loss test set.
2. Test optical fiber cable on reels. Use an optical time domain reflectometer to verify the cable length and locate cable defects, splices, and connector; include the loss value of each. Retain test data and include the record in maintenance data.
3. Test each pair of UTP cable for open and short circuits.

1.8 FIELD CONDITIONS

A. Do not install conductors and cables that are wet, moisture damaged, or mold damaged.

1. Indications that wire and cables are wet or moisture damaged include, but are not limited to, discoloration and sagging of factory packing materials.

B. Environmental Limitations: Do not deliver or install UTP, optical fiber, and coaxial cables and connecting materials until wet work in spaces is complete and dry, and temporary HVAC system is operating and maintaining ambient temperature and humidity conditions at occupancy levels during the remainder of the construction period.

PART 2 - PRODUCTS

2.1 PERFORMANCE REQUIREMENTS

A. Surface-Burning Characteristics: Comply with ASTM E 84; testing by a qualified testing agency. Identify products with appropriate markings of applicable testing agency.

1. Flame-Spread Index: 25 or less.
2. Smoke-Developed Index: 50 or less.

B. Electrical Components, Devices, and Accessories: Listed and labeled as defined in NFPA 70, by a qualified testing agency, and marked for intended location and application.

2.2 UTP CABLE

A. Manufacturers: Subject to compliance with requirements, provide products by one of the following:

1. ADC.
2. AMP Netconnect; a brand of Tyco Electronics Corporation.
3. Belden Inc.
4. Or Equal.

B. Description: 100-ohm, four-pair UTP, covered with a blue thermoplastic jacket.

1. Comply with ICEA S-90-661 for mechanical properties.
2. Comply with TIA/EIA-568-B.1 for performance specifications.
3. Comply with TIA/EIA-568-B.2, Category 6.
4. Listed and labeled by an NRTL acceptable to authorities having jurisdiction as complying with UL 444 and NFPA 70 for the following types:

    a. Communications, General Purpose: Type CM or CMG.
    b. Communications, Plenum Rated: Type CMP, complying with NFPA 262.
    c. Communications, Riser Rated: Type CMR; or MPP, complying with UL 1666.
    d. Communications, Limited Purpose: Type CMX; or MPP.
    e. Multipurpose: Type MP or MPG.
    f. Multipurpose, Plenum Rated: Type MPP, complying with NFPA 262.
    g. Multipurpose, Riser Rated: Type MPR or MPP, complying with UL 1666.

2.3 UTP CABLE HARDWARE

A. Manufacturers: Subject to compliance with requirements, provide products by one of the following:

1. ADC.

2. American Technology Systems Industries, Inc.
3. AMP Netconnect; a brand of Tyco Electronics Corporation.
4. Belden Inc.
5. Or Equal.

B. UTP Cable Connecting Hardware: IDC type, using modules designed for punch-down caps or tools. Cables shall be terminated with connecting hardware of the same category or higher.

C. Connecting Blocks: 110-style for Category 6. Provide blocks for the number of cables terminated on the block, plus 25 percent spare. Integral with connector bodies, including plugs and jacks where indicated.

2.4 OPTICAL FIBER CABLE

A. Manufacturers: Subject to compliance with requirements, provide products by one of the following:

1. AMP Netconnect; a brand of Tyco Electronics Corporation.
2. Belden Inc.
3. Berk-Tek; a Nexans company.
4. Or Equal.

B. Description: Multimode, 62.5/125-micrometer, 24 -fiber, nonconductive, tight buffer, optical fiber cable.

1. Comply with ICEA S-83-596 for mechanical properties.
2. Comply with TIA/EIA-568-B.3 for performance specifications.
3. Comply with TIA-492AAAB and TIA-492AAAA-A for detailed specifications.
4. Listed and labeled by an NRTL acceptable to authorities having jurisdiction as complying with UL 444, UL 1651, and NFPA 70 for the following types:

    a. General Purpose, Nonconductive: Type OFN or OFNG.
    b. Plenum Rated, Nonconductive: Type OFNP, complying with NFPA 262.
    c. Riser Rated, Nonconductive: Type OFNR or OFNP, complying with UL 1666.
    d. General Purpose, Conductive: Type OFC or OFCG.
    e. Plenum Rated, Conductive: Type OFCP or OFNP, complying with NFPA 262.
    f. Riser Rated, Conductive: Type OFCR, complying with UL 1666.

5. Conductive cable shall be aluminum armored type.
6. Maximum Attenuation: 3.50 dB/km at 850 nm; 1.5 dB/km at 1300 nm.
7. Minimum Modal Bandwidth: 160 MHz-km at 850 nm; 500 MHz-km at 1300 nm.

C. Jacket:

1. Jacket Color: Orange for 62.5/125-micrometer cable.
2. Cable cordage jacket, fiber, unit, and group color shall be according to TIA-598-C.
3. Imprinted with fiber count, fiber type, and aggregate length at regular intervals not to exceed 40 inches (1000 mm).

2.5 OPTICAL FIBER CABLE HARDWARE

A. Manufacturers: Subject to compliance with requirements, provide products by one of the following:

1. ADC.
2. American Technology Systems Industries, Inc.
3. Belden Inc.
4. Or Equal.

B. Cable Connecting Hardware: Meet the Optical Fiber Connector Intermateability Standards (FOCIS) specifications of TIA-604-2-B, TIA-604-3-B, and TIA/EIA-604-12. Comply with TIA/EIA-568-B.3.

1. Quick-connect, simplex and duplex, Type SC connectors. Insertion loss not more than 0.75 dB.
2. Type SFF connectors may be used in termination racks, panels, and equipment packages.

2.6 COAXIAL CABLE HARDWARE

A. Manufacturers: Subject to compliance with requirements, provide products by one of the following:

1. Emerson Network Power Connectivity Solutions; AIM Electronics Brand.
2. Leviton Commercial Networks Division.
3. Siemon.
4. Or Equal.

B. Coaxial-Cable Connectors: Type BNC, 75 ohms.

2.7 IDENTIFICATION PRODUCTS

A. Manufacturers: Subject to compliance with requirements, provide products by one of the following:

1. Brady Worldwide, Inc.
2. HellermannTyton North America.
3. Kroy LLC.
4. Panduit Corp.
5. Or Equal.

B. Comply with UL 969 for a system of labeling materials, including label stocks, laminating adhesives, and inks used by label printers.

C. Comply with requirements in Section 260553 "Identification for Electrical Systems."

2.8 SOURCE QUALITY CONTROL

A. Testing Agency: Engage a qualified testing agency to evaluate cables.

B. Factory test UTP and optical fiber cables on reels according to TIA/EIA-568-B.1.

C. Factory test UTP cables according to TIA/EIA-568-B.2.

D. Factory test multimode optical fiber cables according to TIA-526-14-A and TIA/EIA-568-B.3.

E. Factory sweep test coaxial cables at frequencies from 5 MHz to 1 GHz. Sweep test shall test the frequency response, or attenuation over frequency, of a cable by generating a voltage whose frequency is varied through the specified frequency range and graphing the results.

F. Cable will be considered defective if it does not pass tests and inspections.

G. Prepare test and inspection reports.

PART 3 - EXECUTION

3.1 INSTALLATION OF HANGERS AND SUPPORTS

A. Comply with requirements in Section 260529 "Hangers and Supports for Electrical Systems" for installation of supports for cables.

3.2 WIRING METHOD

A. Install wiring in metal pathways and wireways.

1. Minimum conduit size shall be 3/4 inch. Control and data transmission wiring shall not share conduit with other building wiring systems.
2. Comply with requirements in Section 280528 "Pathways for Electronic Safety and Security."
3. Comply with requirements in Section 260536 "Cable Trays for Electrical Systems."

B. Install cable, concealed in accessible ceilings, walls, and floors when possible.

C. Wiring within Enclosures:

1. Bundle, lace, and train conductors to terminal points with no excess and without exceeding manufacturer's limitations on bending radii.
2. Install lacing bars and distribution spools.
3. Separate power-limited and non-power-limited conductors as recommended in writing by manufacturer.
4. Install conductors parallel with or at right angles to sides and back of enclosure.
5. Connect conductors that are terminated, spliced, or interrupted in any enclosure associated with intrusion system to terminal blocks.
6. Mark each terminal according to system's wiring diagrams.

7. Make all connections with approved crimp-on terminal spade lugs, pressure-type terminal blocks, or plug connectors.

3.3 INSTALLATION OF CONDUCTORS AND CABLES

A. Comply with NECA 1.

B. Conductors: Size according to system manufacturer's written instructions unless otherwise indicated.

C. General Requirements for Cabling:

1. Comply with TIA/EIA-568-B.1.
2. Comply with BICSI ITSIM, Ch. 6, "Cable Termination Practices."
3. Terminate all conductors; no cable shall contain unterminated elements. Make terminations only at indicated outlets, terminals, and cross-connect and patch panels.
4. Cables may not be spliced. Secure and support cables at intervals not exceeding 30 inches (760 mm) and not more than 6 inches (150 mm) from cabinets, boxes, fittings, outlets, racks, frames, and terminals.
5. Bundle, lace, and train conductors to terminal points without exceeding manufacturer's limitations on bending radii, but not less than radii specified in BICSI ITSIM, "Cabling Termination Practices" Chapter. Install lacing bars and distribution spools.
6. Do not install bruised, kinked, scored, deformed, or abraded cable. Do not splice cable between termination, tap, or junction points. Remove and discard cable if damaged during installation and replace it with new cable.
7. Cold-Weather Installation: Bring cable to room temperature before dereeling. Heat lamps shall not be used for heating.
8. Pulling Cable: Comply with BICSI ITSIM, Ch. 4, "Pulling Cable." Monitor cable pull tensions.

D. UTP Cable Installation: Install using techniques, practices, and methods that are consistent with Category 6 rating of components and that ensure Category 6 performance of completed and linked signal paths, end to end.

1. Comply with TIA/EIA-568-B.2.
2. Install 110-style IDC termination hardware unless otherwise indicated.
3. Do not untwist UTP cables more than 1/2 inch (12 mm) from the point of termination to maintain cable geometry.

E. Optical Fiber Cable Installation:

1. Comply with TIA/EIA-568-B.3.
2. Cable shall be terminated on connecting hardware that is rack or cabinet mounted.

F. Open-Cable Installation:

1. Install cabling with horizontal and vertical cable guides in telecommunications spaces with terminating hardware and interconnection equipment.

2. Suspend copper cable not in a wireway or pathway a minimum of 8 inches (200 mm) above ceilings by cable supports not more than 60 inches (1525 mm) apart.
3. Cable shall not be run through structural members or in contact with pipes, ducts, or other potentially damaging items.

G. Separation from EMI Sources:

1. Comply with BICSI TDMM and TIA-569-B recommendations for separating unshielded copper voice and data communication cable from potential EMI sources, including electrical power lines and equipment.
2. Separation between open communications cables or cables in nonmetallic raceways and unshielded power conductors and electrical equipment shall be as follows:

   a. Electrical Equipment Rating Less Than 2 kVA: A minimum of 5 inches (127 mm).
   b. Electrical Equipment Rating between 2 and 5 kVA: A minimum of 12 inches (300 mm).
   c. Electrical Equipment Rating More Than 5 kVA: A minimum of 24 inches (600 mm).

3. Separation between communications cables in grounded metallic raceways and unshielded power lines or electrical equipment shall be as follows:

   a. Electrical Equipment Rating Less Than 2 kVA: A minimum of 2-1/2 inches (64 mm).
   b. Electrical Equipment Rating between 2 and 5 kVA: A minimum of 6 inches (150 mm).
   c. Electrical Equipment Rating More Than 5 kVA: A minimum of 12 inches (300 mm).

4. Separation between cables in grounded metallic raceways and power lines and electrical equipment located in grounded metallic conduits or enclosures shall be as follows:

   a. Electrical Equipment Rating Less Than 2 kVA: No requirement.
   b. Electrical Equipment Rating between 2 and 5 kVA: A minimum of 3 inches (75 mm).
   c. Electrical Equipment Rating More Than 5 kVA: A minimum of 6 inches (150 mm).

5. Separation between Cables and Electrical Motors and Transformers, 5 kVA or HP and Larger: A minimum of 48 inches (1200 mm).
6. Separation between Cables and Fluorescent Fixtures: A minimum of 5 inches (127 mm).

3.4 POWER AND CONTROL-CIRCUIT CONDUCTORS

A. 120-V Power Wiring: Install according to Section 260519 "Low-Voltage Electrical Power Conductors and Cables" unless otherwise indicated.

B. Minimum Conductor Sizes:

1. Class 1 remote-control and signal circuits, No. 14 AWG.
2. Class 2 low-energy, remote-control and signal circuits, No. 16 AWG.
3. Class 3 low-energy, remote-control, alarm and signal circuits, No. 12 AWG.

3.5 CONNECTIONS

A. Comply with requirements in Section 281300 "Access Control" for connecting, terminating, and identifying wires and cables.

B. Comply with requirements in Section 282300 "Video Surveillance" for connecting, terminating, and identifying wires and cables.

3.6 FIRESTOPPING

A. Comply with requirements in Section 078413 "Penetration Firestopping."

B. Comply with TIA-569-B, "Firestopping" Annex A.

C. Comply with BICSI TDMM, "Firestopping Systems" Article.

3.7 GROUNDING

A. For communications wiring, comply with J-STD-607-A and with BICSI TDMM, "Grounding, Bonding, and Electrical Protection" Chapter.

B. For low-voltage wiring and cabling, comply with requirements in Section 260526 "Grounding and Bonding for Electrical Systems."

3.8 IDENTIFICATION

A. Identify system components, wiring, and cabling complying with TIA/EIA-606-A. Comply with requirements for identification specified in Section 260553 "Identification for Electrical Systems."

3.9 FIELD QUALITY CONTROL

A. Manufacturer's Field Service: Engage a factory-authorized service representative to test and inspect components, assemblies, and equipment installations, including connections.

B. Perform the following tests and inspections:

1. Visually inspect UTP and optical fiber cable jacket materials for NRTL certification markings. Inspect cabling terminations to confirm color-coding for pin assignments, and inspect cabling connections to confirm compliance with TIA/EIA-568-B.1.
2. Visually inspect cable placement, cable termination, grounding and bonding, equipment and patch cords, and labeling of all components.
3. Test UTP cabling for DC loop resistance, shorts, opens, intermittent faults, and polarity between conductors. Test operation of shorting bars in connection blocks. Test cables after termination but not cross connection.

    a. Test instruments shall meet or exceed applicable requirements in TIA/EIA-568-B.2. Perform tests with a tester that complies with performance requirements in "Test

Instruments (Normative)" Annex, complying with measurement accuracy specified in "Measurement Accuracy (Informative)" Annex. Use only test cords and adapters that are qualified by test equipment manufacturer for channel or link test configuration.

4. Optical Fiber Cable Tests:

   a. Test instruments shall meet or exceed applicable requirements in TIA/EIA-568-B.1. Use only test cords and adapters that are qualified by test equipment manufacturer for channel or link test configuration.
   b. Link End-to-End Attenuation Tests:

      1) Multimode Link Measurements: Test at 850 or 1300 nm in one direction according to TIA-526-14-A, Method B, One Reference Jumper.
      2) Attenuation test results for links shall be less than 2.0 dB. Attenuation test results shall be less than that calculated according to equation in TIA/EIA-568-B.1.

5. Coaxial Cable Tests: Comply with requirements in Section 274133 "Master Antenna Television System."

C. Document data for each measurement. Print data for submittals in a summary report that is formatted using Table 10.1 in BICSI TDMM as a guide, or transfer the data from the instrument to the computer, save as text files, print, and submit.

D. End-to-end cabling will be considered defective if it does not pass tests and inspections.

E. Prepare test and inspection reports.

PART 4 – WIRELESS DATA TRANSMISSIN SYSTEM (Furnished by College)

4.1 WIRELESS DATA TRANSMISSION SYSTEM

A. All equipment and materials used shall be standard components that are regularly manufactured and used in the manufacturer's system.

B. All systems and components shall have been thoroughly tested and proven in actual use.

C. Basis-of-Design Product subject to compliance with requirements. Provide Fluid Mesh..

4.2 WIRELESS TRANSCEIVER (Furnished by College)

A. The wireless transceiver shall be compliant with the following technical specifications:

1. 2x2 MIMO technology with modulation speed up to 300Mbps.
2. Frequency range: 4.940 – 4.990GHz and 5.17 - 5.850GHz.
3. OFDM modulation (BPSK, QPSK, 16-QAM, 64-QAM).
4. Integrated patch or sector antenna with gain between 14.6 and 17.1dB.

5. Tramsission power: up to 27dBm.
6. IP65 classified enclosure.
7. Operating temperature of -30C to + 80C.
8. Power consumption: maximum 8W.
9. Passive POE power either 15V DC or 24V DC.

B. The wireless transceiver shall be capable of transmitting, receiving and forwarding IP packets through the optimal path in real time. The wireless transceiver shall perform a continuous analysis of the bandwidth available on every wireless link. The wireless unit shall be able to detect increases and decreases in link quality in real time, routing packets around low-quality links and sources of interference. The wireless transceiver shall not route packets by minimizing the number of hops in the path but it shall pick the path that provides the lowest latency, highest bandwidth, and lowest error rates.

C. The wireless transceiver shall be able to support point-to-point, point-to-multipoint, mesh and hybrid network topologies.

D. The wireless transceiver shall be able to support both centralized polling-based and distributed CSMA/CA-based Medium Access Control (MAC) protocols in order to create point-to-point, point-to-multipoint, and mesh architectures.

E. The wireless transceiver shall be capable of supporting up to 150 clients in point-to-multipoint configuration

F. The wireless receiver shall implement an automatic medium access control algorithm that detects the network topology and enables polling-based MAC or CSMA-based MAC.

G. The wireless system shall run on a serverless architecture and shall have a web-based interface for remote management.

H. The wireless network shall be monitored via FMQuadro web-based management interface.

I. The wireless system shall store up to 30 days history of the main network parameters: signal strength, modulation speed, throughput, packet error rate and link error rate.

J. The wireless transceiver interface shall provide a built-in spectrum analyzer to scan the frequency spectrum and identify possible source of interference.

K. The wireless transceiver interface shall provide a real time bandwidth monitoring tool

L. The wireless transceiver shall fully support 802.1Q VLAN tagging. It shall support hybrid port-based and MAC-based VLAN tagging.

M. The wireless transceiver shall not be visible to standard 802.11-enabled devices.

N. The wireless transceiver shall support the Prodigy transmission protocol. It shall prioritize PTZ control packets over video packets to minimize latency and shall be able to transmit IP packets, such as MPEG4 I-frame vs. MPEG-4 P-frame, in different ways, providing different levels of reliability and priority.

O. The wireless transceiver shall provide at least one Ethernet port to interconnect any Ethernet-based devices, such as IP cameras, video-servers, Wi-Fi Access Points, VoIP phones, etc.

P. The wireless transceiver shall be able to route and forward multicast traffic.

Q. The wireless transceiver shall have the ability to limit its Ethernet port capacity in order to allow the user to purchase only the amount of bandwidth required. Additional throughput shall be enabled by upgrading the transceiver with software plug-ins in case the bandwidth requirements increase over time.

R. The wireless transceiver shall be shall be in compliance with the FIPS 197 directive and support 128-bit AES encryption at the link level.

S. The wireless transceiver shall have a standard 2 years warranty in parts and labor and an optional warranty extension to 3, 4, or 5 year periods.

END OF SECTION 280513

SECTION 280528 - PATHWAYS FOR ELECTRONIC SAFETY AND SECURITY

PART 1 - GENERAL

1.1 RELATED DOCUMENTS

A. Drawings and general provisions of the Contract, including General and Supplementary Conditions and Division 01 Specification Sections, apply to this Section.

1.2 SUMMARY

A. Section Includes:

1. Metal conduits, tubing, and fittings.
2. Nonmetallic conduits, tubing, and fittings.
3. Optical-fiber-cable pathways and fittings.
4. Metal wireways and auxiliary gutters.
5. Nonmetallic wireways and auxiliary gutters.
6. Surface pathways.
7. Boxes, enclosures, and cabinets.
8. Handholes and boxes for exterior underground cabling.

B. Related Requirements:

1. Section 260543 "Underground Ducts and Raceways for Electrical Systems" for exterior ductbanks, manholes, and underground utility construction.
2. Section 260533 "Raceways and Boxes for Electrical Systems" for conduits, wireways, surface raceways, boxes, enclosures, cabinets, handholes, and faceplate adapters serving electrical systems.
3. Section 270528 "Pathways for Communications Systems" for conduits, surface pathways, innerduct, boxes, and faceplate adapters serving communications systems.

1.3 DEFINITIONS

A. ARC: Aluminum rigid conduit.

B. GRC: Galvanized rigid steel conduit.

C. IMC: Intermediate metal conduit.

1.4 ACTION SUBMITTALS

A. Product Data: For surface pathways, wireways and fittings, floor boxes, hinged-cover enclosures, and cabinets.

B. Shop Drawings: For custom enclosures and cabinets. Include plans, elevations, sections, and attachment details.

C. Samples: For wireways nonmetallic wireways and for each color and texture specified, 12 inches long.

1.5 INFORMATIONAL SUBMITTALS

A. Coordination Drawings: Pathway routing plans, drawn to scale, on which the following items are shown and coordinated with each other, using input from installers of items involved:

B. Qualification Data: For professional engineer.

PART 2 - PRODUCTS

2.1 METAL CONDUITS, TUBING, AND FITTINGS

A. Manufacturers: Subject to compliance with requirements, provide products by one of the following:

1. AFC Cable Systems, Inc.
2. Allied Tube & Conduit; a Tyco International Ltd. Co.
3. Alpha Wire Company.
4. Southwire Company.
5. Thomas & Betts Corporation.
6. Or Equal.

B. General Requirements for Metal Conduits and Fittings:

1. Listed and labeled as defined in NFPA 70, by a qualified testing agency, and marked for intended location and application.
2. Comply with TIA-569-B.

C. GRC: Comply with ANSI C80.1 and UL 6.

D. ARC: Comply with ANSI C80.5 and UL 6A.

E. IMC: Comply with ANSI C80.6 and UL 1242.

F. EMT: Comply with ANSI C80.3 and UL 797.

G. FMC: Comply with UL 1; zinc-coated steel or aluminum.

H. LFMC: Flexible steel conduit with PVC jacket and complying with UL 360.

I. Fittings for Metal Conduit: Comply with NEMA FB 1 and UL 514B.

1. Fittings for EMT:

a. Material: Steel.
b. Type: compression.

2. Expansion Fittings: PVC or steel to match conduit type, complying with UL 467, rated for environmental conditions where installed, and including flexible external bonding jumper.
3. Coating for Fittings for PVC-Coated Conduit: Minimum thickness of 0.040 inch (1 mm), with overlapping sleeves protecting threaded joints.

J. Joint Compound for IMC, GRC, or ARC: Approved, as defined in NFPA 70, by authorities having jurisdiction for use in conduit assemblies, and compounded for use to lubricate and protect threaded conduit joints from corrosion and to enhance their conductivity.

2.2 NONMETALLIC CONDUITS, TUBING, AND FITTINGS

A. Manufacturers: Subject to compliance with requirements, provide products by one of the following:

1. AFC Cable Systems, Inc.
2. Allied Tube & Conduit; a Tyco International Ltd. Co.
3. Anamet Electrical, Inc.
4. Arnco Corporation.
5. Or Equal

B. General Requirements for Nonmetallic Conduits and Fittings:

1. Listed and labeled as defined in NFPA 70, by a qualified testing agency, and marked for intended location and application.
2. Comply with TIA-569-B.

C. ENT: Comply with NEMA TC 13 and UL 1653.

D. RNC: Type EPC-80-PVC, complying with NEMA TC 2 and UL 651 unless otherwise indicated.

E. LFNC: Comply with UL 1660.

F. Rigid HDPE: Comply with UL 651A.

G. Continuous HDPE: Comply with UL 651B.

H. RTRC: Comply with UL 1684A and NEMA TC 14.

I. Fittings for ENT and RNC: Comply with NEMA TC 3; match to conduit or tubing type and material.

J. Fittings for LFNC: Comply with UL 514B.

K. Solvent cements and adhesive primers shall have a VOC content of 510 and 550 g/L or less, respectively, when calculated according to 40 CFR 59, Subpart D (EPA Method 24).

L. Solvent cements and adhesive primers shall comply with the testing and product requirements of the California Department of Health Services' "Standard Practice for the Testing of Volatile Organic Emissions from Various Sources Using Small-Scale Environmental Chambers."

2.3 OPTICAL-FIBER-CABLE PATHWAYS AND FITTINGS

A. Manufacturers: Subject to compliance with requirements, provide products by one of the following:

1. Alpha Wire Company.
2. Arnco Corporation.
3. Endot Industries Inc.
4. Or Equal.

B. Description: Comply with UL 2024; flexible-type pathway, approved for general-use installation unless otherwise indicated.

1. Listed and labeled as defined in NFPA 70, by a qualified testing agency, and marked for intended location and application.
2. Comply with TIA-569-B.

2.4 METAL WIREWAYS AND AUXILIARY GUTTERS

A. Manufacturers: Subject to compliance with requirements, provide products by one of the following:

1. Cooper B-Line, Inc.
2. Hoffman; a Pentair company.
3. Mono-Systems, Inc.
4. Square D; a brand of Schneider Electric.
5. Or Equal.

B. Description: Sheet metal, complying with UL 870 and NEMA 250, Type 3R unless otherwise indicated, and sized according to NFPA 70.

1. Metal wireways installed outdoors shall be listed and labeled as defined in NFPA 70, by a qualified testing agency, and marked for intended location and application.
2. Comply with TIA-569-B.

C. Fittings and Accessories: Include couplings, offsets, elbows, expansion joints, adapters, hold-down straps, end caps, and other fittings to match and mate with wireways as required for complete system.

D. Wireway Covers: Screw-cover type unless otherwise indicated.

E. Finish: Manufacturer's standard enamel finish.

2.5 NONMETALLIC WIREWAYS AND AUXILIARY GUTTERS

A. Manufacturers: Subject to compliance with requirements, provide products by one of the following:

1. Allied Moulded Products, Inc.
2. Hoffman; a Pentair company.
3. Lamson & Sessions; Carlon Electrical Products.
4. Or Equal.

B. General Requirements for Nonmetallic Wireways and Auxiliary Gutters:

1. Listed and labeled as defined in NFPA 70, by a qualified testing agency, and marked for intended location and application.
2. Comply with TIA-569-B.

C. Description: Fiberglass polyester, extruded and fabricated to required size and shape, without holes or knockouts. Cover shall be gasketed with oil-resistant gasket material and fastened with captive screws treated for corrosion resistance. Connections shall be flanged and have stainless-steel screws and oil-resistant gaskets.

D. Fittings and Accessories: Couplings, offsets, elbows, expansion joints, adapters, hold-down straps, end caps, and other fittings shall match and mate with wireways as required for complete system.

E. Solvent cements and adhesive primers shall have a VOC content of 510 and 550 g/L or less, respectively, when calculated according to 40 CFR 59, Subpart D (EPA Method 24).

2.6 BOXES, ENCLOSURES, AND CABINETS

A. Manufacturers: Subject to compliance with requirements, provide products by one of the following:

1. Cooper Technologies Company; Cooper Crouse-Hinds.
2. Hoffman; a Pentair company.
3. Hubbell Incorporated; Killark Division.
4. Or Equal.

B. General Requirements for Boxes, Enclosures, and Cabinets:

1. Comply with TIA-569-B.
2. Boxes, enclosures and cabinets installed in wet locations shall be listed for use in wet locations.

C. Sheet-Metal Outlet and Device Boxes: Comply with NEMA OS 1 and UL 514A.

D. Cast-Metal Outlet and Device Boxes: Comply with NEMA FB 1, aluminum, Type FD, with gasketed cover.

E. Box extensions used to accommodate new building finishes shall be of same material as recessed box.

F. Small Sheet Metal Pull and Junction Boxes: NEMA OS 1.

G. Cast-Metal Access, Pull, and Junction Boxes: Comply with NEMA FB 1 and UL 1773, galvanized, cast iron with gasketed cover.

H. Device Box Dimensions: 4 inches by 2-1/8 inches by 2-1/8 inches deep.

I. Gangable boxes are allowed.

J. Nonmetallic Outlet and Device Boxes: Comply with NEMA OS 2 and UL 514C.

K. Hinged-Cover Enclosures: Comply with UL 50 and NEMA 250, Type 3R with continuous-hinge cover with flush latch unless otherwise indicated.

1. Metal Enclosures: Steel, finished inside and out with manufacturer's standard enamel.
2. Nonmetallic Enclosures:

   a. Material: Plastic.
   b. Finished inside with radio-frequency-resistant paint.

3. Interior Panels: Steel; all sides finished with manufacturer's standard enamel.

L. Cabinets:

1. NEMA 250, Type 3R, galvanized-steel box with removable interior panel and removable front, finished inside and out with manufacturer's standard enamel.
2. Hinged door in front cover with flush latch and concealed hinge.
3. Key latch to match panelboards.
4. Metal barriers to separate wiring of different systems and voltage.
5. Accessory feet where required for freestanding equipment.
6. Nonmetallic cabinets shall be listed and labeled as defined in NFPA 70, by a qualified testing agency, and marked for intended location and application.

2.7 HANDHOLES AND BOXES FOR EXTERIOR UNDERGROUND CABLING

A. General Requirements for Handholes and Boxes:

1. Boxes and handholes for use in underground systems shall be designed and identified as defined in NFPA 70, for intended location and application.
2. Boxes installed in wet areas shall be listed and labeled as defined in NFPA 70, by a qualified testing agency, and marked for intended location and application.
3. Comply with TIA-569-B.

B. Polymer-Concrete Handholes and Boxes with Polymer-Concrete Cover (All Boxes Unless Otherwise Noted): Molded of sand and aggregate, bound together with polymer resin, and reinforced with steel, fiberglass or a combination of the two.

1. Manufacturers: Subject to compliance with requirements, provide products by one of the following:

   a. Armorcast Products Company.
   b. Carson Industries LLC.
   c. CDR Systems Corporation; Hubbell Power Systems.
   d. NewBasis.
   e. Oldcastle Precast, Inc.; Christy Concrete Products.
   f. Or Equal.

2. Standard: Comply with SCTE 77.
3. Configuration: Designed for flush burial with open closed integral closed bottom unless otherwise indicated.
4. Cover: Weatherproof, secured by tamper-resistant locking devices and having structural load rating consistent with enclosure and handhole location.
5. Cover Finish: Nonskid finish shall have a minimum coefficient of friction of 0.50.
6. Cover Legend: Molded lettering, “CCTV.”
7. Conduit Entrance Provisions: Conduit-terminating fittings shall mate with entering ducts for secure, fixed installation in enclosure wall.
8. Handholes 12 Inches Wide by 24 Inches Long and Larger: Have inserts for cable racks and pulling-in irons installed before concrete is poured.

C. Fiberglass Handholes and Boxes: Molded of fiberglass-reinforced polyester resin, with frame and covers of polymer concrete.

1. Manufacturers: Subject to compliance with requirements, provide products by one of the following:

   a. Armorcast Products Company.
   b. Carson Industries LLC.
   c. CDR Systems Corporation; Hubbell Power Systems.
   d. NewBasis.
   e. Nordic Fiberglass, Inc.
   f. Oldcastle Precast, Inc.; Christy Concrete Products.
   g. Or Equal.

2. Standard: Comply with SCTE 77.
3. Color of Frame and Cover: Gray.

4. Configuration: Designed for flush burial with open bottom unless otherwise indicated.
5. Cover: Weatherproof, secured by tamper-resistant locking devices and having structural load rating consistent with enclosure and handhole location.
6. Cover Finish: Nonskid finish shall have a minimum coefficient of friction of 0.50.
7. Cover Legend: Molded lettering. "CCTV."
8. Conduit Entrance Provisions: Conduit-terminating fittings shall mate with entering ducts for secure, fixed installation in enclosure wall.
9. Handholes 12 Inches Wide by 24 Inches Long and Larger: Have inserts for cable racks and pulling-in irons installed before concrete is poured.

2.8 SOURCE QUALITY CONTROL FOR UNDERGROUND ENCLOSURES

A. Handhole and Pull-Box Prototype Test: Test prototypes of handholes and boxes for compliance with SCTE 77. Strength tests shall be for specified tier ratings of products supplied.

1. Tests of materials shall be performed by an independent testing agency.
2. Strength tests of complete boxes and covers shall be by either an independent testing agency or manufacturer. A qualified registered professional engineer shall certify tests by manufacturer.
3. Testing machine pressure gages shall have current calibration certification complying with ISO 9000 and ISO 10012, and traceable to NIST standards.

PART 3 - EXECUTION

3.1 PATHWAY APPLICATION

A. Outdoors: Apply pathway products as specified below unless otherwise indicated:

1. Exposed Conduit: GRC.
2. Concealed Conduit, Aboveground EMT.
3. Underground Conduit: RNC, Type EPC-80-PVC.

B. Indoors: Apply pathway products as specified below unless otherwise indicated:

1. Exposed, Not Subject to Physical Damage: EMT.
2. Exposed, Not Subject to Severe Physical Damage: EMT.
3. Exposed and Subject to Severe Physical Damage: GRC.
4. Concealed in Ceilings and Interior Walls and Partitions: EMT.
5. Damp or Wet Locations: GRC.
6. Pathways for Optical-Fiber or Communications Cable in Spaces Used for Environmental Air: Plenum-type, optical-fiber-cable pathway.
7. Pathways for Optical-Fiber or Communications-Cable Risers in Vertical Shafts: Riser-type, optical-fiber-cable pathway.
8. Pathways for Concealed General Purpose Distribution of Optical-Fiber or Communications Cable: General-use, optical-fiber-cable pathway.

9. Boxes and Enclosures: NEMA 250, Type 1, except use NEMA 250, Type 3R stainless steel in damp or wet locations.

C. Minimum Pathway Size: 3/4-inch trade size. Minimum size for optical-fiber cables is 1 inch (27 mm).

D. Pathway Fittings: Compatible with pathways and suitable for use and location.

1. Rigid and Intermediate Steel Conduit: Use threaded rigid steel conduit fittings unless otherwise indicated. Comply with NEMA FB 2.10.
2. PVC Externally Coated, Rigid Steel Conduits: Use only fittings listed for use with this type of conduit. Patch and seal all joints, nicks, and scrapes in PVC coating after installing conduits and fittings. Use sealant recommended by fitting manufacturer and apply in thickness and number of coats recommended by manufacturer.
3. EMT: Use compression, fittings. Comply with NEMA FB 2.10.
4. Flexible Conduit: Use only fittings listed for use with flexible conduit. Comply with NEMA FB 2.20.

E. Do not install aluminum conduits, boxes, or fittings in contact with concrete or earth.

F. Install surface pathways only where indicated on Drawings.

G. Do not install nonmetallic conduit where ambient temperature exceeds 120 deg F.

3.2 INSTALLATION

A. Comply with NECA 1, NECA 101, and TIA-569-B for installation requirements except where requirements on Drawings or in this article are stricter. Comply with NECA 102 for aluminum pathways. Comply with NFPA 70 limitations for types of pathways allowed in specific occupancies and number of floors.

B. Keep pathways at least 6 inches (150 mm) away from parallel runs of other trades.

C. Complete pathway installation before starting conductor installation.

D. Comply with requirements in Section 260529 "Hangers and Supports for Electrical Systems" for hangers and supports.

E. Arrange stub-ups so curved portions of bends are not visible above finished slab.

F. Install no more than the equivalent of three 90-degree bends in any conduit run except for communications wiring conduits for which only two 90-degree bends are allowed. Support within 12 inches (300 mm) of changes in direction.

G. Conceal conduit and EMT within finished walls, ceilings, and floors unless otherwise indicated. Install conduits parallel or perpendicular to building lines.

H. Support conduit within 12 inches (300 mm) of enclosures to which attached.

I. Pathways Embedded in Slabs:

1. Run conduit larger than 1-inch (27-mm) trade size, parallel or at right angles to main reinforcement. Where at right angles to reinforcement, place conduit close to slab support. Secure pathways to reinforcement at maximum 10-foot (3-m) intervals.
2. Arrange pathways to keep a minimum of 1 inch (25 mm) of concrete cover in all directions.
3. Do not embed threadless fittings in concrete unless specifically approved by Architect for each specific location.

J. Threaded Conduit Joints, Exposed to Wet, Damp, Corrosive, or Outdoor Conditions: Apply listed compound to threads of pathway and fittings before making up joints. Follow compound manufacturer's written instructions.

K. Coat field-cut threads on PVC-coated pathway with a corrosion-preventing conductive compound prior to assembly.

L. Terminate threaded conduits into threaded hubs or with locknuts on inside and outside of boxes or cabinets. Install insulated bushings on conduits terminated with locknuts.

M. Install pathways square to the enclosure and terminate at enclosures with locknuts. Install locknuts hand tight plus 1/4 turn more.

N. Do not rely on locknuts to penetrate nonconductive coatings on enclosures. Remove coatings in the locknut area prior to conduit assembly to assure a continuous ground path.

O. Cut conduit perpendicular to the length. For conduits of 2-inch (53-mm) trade size and larger, use roll cutter or a guide to ensure cut is straight and perpendicular to the length.

P. Install pull wires in empty pathways. Use polypropylene or monofilament plastic line with not less than 200-lb (90-kg) tensile strength. Leave at least 12 inches (300 mm) of slack at each end of pull wire. Cap underground pathways designated as spare above grade alongside pathways in use.

Q. Surface Pathways:

1. Install surface pathway for surface electrical outlet boxes only where indicated on Drawings.
2. Install surface pathway with a minimum 2-inch (50-mm) radius control at bend points.
3. Secure surface pathway with screws or other anchor-type devices at intervals not exceeding 48 inches (1200 mm) and with no less than two supports per straight pathway section. Support surface pathway according to manufacturer's written instructions. Tape and glue are not acceptable support methods.

R. Pathways for Optical-Fiber and Communications Cable: Install pathways, as follows:

1. 3/4-Inch (21-mm) Trade Size and Smaller: Install pathways in maximum lengths of 50 feet (15 m).

2. 1-Inch (27-mm) Trade Size and Larger: Install pathways in maximum lengths of 75 feet (23 m).
3. Install with a maximum of two 90-degree bends or equivalent for each length of pathway unless Drawings show stricter requirements. Separate lengths with pull or junction boxes or terminations at distribution frames or cabinets where necessary to comply with these requirements.

S. Install pathway sealing fittings at accessible locations according to NFPA 70 and fill them with listed sealing compound. For concealed pathways, install each fitting in a flush steel box with a blank cover plate having a finish similar to that of adjacent plates or surfaces. Install pathway sealing fittings according to NFPA 70.

T. Install devices to seal pathway interiors at accessible locations. Locate seals so no fittings or boxes are between the seal and the following changes of environments. Seal the interior of all pathways at the following points:

1. Where conduits pass from warm to cold locations, such as boundaries of refrigerated spaces.
2. Where an underground service pathway enters a building or structure.
3. Where otherwise required by NFPA 70.

U. Comply with manufacturer's written instructions for solvent welding PVC conduit and fittings.

V. Expansion-Joint Fittings:

1. Install in each run of aboveground RNC that is located where environmental temperature change may exceed 30 deg F (17 deg C), and that has straight-run length that exceeds 25 feet (7.6 m). Install in each run of aboveground RMC and EMT conduit that is located where environmental temperature change may exceed 100 deg F (55 deg C) and that has straight-run length that exceeds 100 feet (30 m).
2. Install type and quantity of fittings that accommodate temperature change listed for each of the following locations:

   a. Outdoor Locations Not Exposed to Direct Sunlight: 125 deg F temperature change.
   b. Outdoor Locations Exposed to Direct Sunlight: 155 deg F temperature change.
   c. Indoor Spaces Connected with Outdoors without Physical Separation: 125 deg F temperature change.
   d. Attics: 135 deg F temperature change.

3. Install fitting(s) that provide expansion and contraction for at least 0.00041 inch per foot of length of straight run per deg F (0.06 mm per meter of length of straight run per deg C) of temperature change for PVC conduits. Install fitting(s) that provide expansion and contraction for at least 0.000078 inch per foot of length of straight run per deg F (0.0115 mm per meter of length of straight run per deg C) of temperature change for metal conduits.
4. Install expansion fittings at all locations where conduits cross building or structure expansion joints.

5. Install each expansion-joint fitting with position, mounting, and piston setting selected according to manufacturer's written instructions for conditions at specific location at time of installation. Install conduit supports to allow for expansion movement.

W. Mount boxes at heights indicated on Drawings. If mounting heights of boxes are not individually indicated, give priority to ADA requirements. Install boxes with height measured to center of box unless otherwise indicated.

3.3 INSTALLATION OF UNDERGROUND CONDUIT

A. Direct-Buried Conduit:

1. Excavate trench bottom to provide firm and uniform support for conduit. Prepare trench bottom as specified in Section 312000 "Earth Moving" for pipe less than 6 inches (150 mm) in nominal diameter.
2. Install backfill as specified in Section 312000 "Earth Moving."
3. After installing conduit, backfill and compact. Start at tie-in point, and work toward end of conduit run, leaving conduit at end of run free to move with expansion and contraction as temperature changes during this process. Firmly hand tamp backfill around conduit to provide maximum supporting strength. After placing controlled backfill to within 12 inches (300 mm) of finished grade, make final conduit connection at end of run and complete backfilling with normal compaction as specified in Section 312000 "Earth Moving."
4. Install manufactured duct elbows for stub-ups at poles and equipment and at building entrances through floor unless otherwise indicated. Encase elbows for stub-up ducts throughout the length of elbow.
5. Install manufactured rigid steel conduit elbows for stub-ups at poles and equipment and at building entrances through floor.

    a. Couple steel conduits to ducts with adapters designed for this purpose, and encase coupling with 3 inches (75 mm) of concrete for a minimum of 12 inches (300 mm) on each side of the coupling.
    b. For stub-ups at equipment mounted on outdoor concrete bases and where conduits penetrate building foundations, extend steel conduit horizontally a minimum of 60 inches (1500 mm) from edge of foundation or equipment base. Install insulated grounding bushings on terminations at equipment.

6. Warning Planks: Bury warning planks approximately 12 inches (300 mm) above direct-buried conduits, but a minimum of 6 inches (150 mm) below grade. Align planks along centerline of conduit.
7. Underground Warning Tape: Comply with requirements in Section 260553 "Identification for Electrical Systems."

3.4 INSTALLATION OF UNDERGROUND HANDHOLES AND BOXES

A. Install handholes and boxes level and plumb and with orientation and depth coordinated with connecting conduits to minimize bends and deflections required for proper entrances.

B. Unless otherwise indicated, support units on a level bed of crushed stone or gravel, graded from 1/2-inch (12.5-mm) sieve to No. 4 (4.75-mm) sieve and compacted to same density as adjacent undisturbed earth.

C. Elevation: In paved areas, set so cover surface will be flush with finished grade. Set covers of other enclosures 1 inch (25 mm) above finished grade.

D. Install handholes with bottom below frost line, below grade.

E. Install removable hardware, including pulling eyes, cable stanchions, cable arms, and insulators, as required for installation and support of cables and conductors and as indicated. Select arm lengths to be long enough to provide spare space for future cables, but short enough to preserve adequate working clearances in enclosure.

F. Field cut openings for conduits according to enclosure manufacturer's written instructions. Cut wall of enclosure with a tool designed for material to be cut. Size holes for terminating fittings to be used, and seal around penetrations after fittings are installed.

3.5 SLEEVE AND SLEEVE-SEAL INSTALLATION FOR ELECTRONIC SAFETY AND SECURITY PENETRATIONS

A. Install sleeves and sleeve seals at penetrations of exterior floor and wall assemblies. Comply with requirements in Section 260544 "Sleeves and Sleeve Seals for Electronic Safety and Security Pathways and Cabling."

3.6 FIRESTOPPING

A. Install firestopping at penetrations of fire-rated floor and wall assemblies. Comply with requirements in Section 078413 "Penetration Firestopping."

3.7 PROTECTION

A. Protect coatings, finishes, and cabinets from damage and deterioration.

1. Repair damage to galvanized finishes with zinc-rich paint recommended by manufacturer.
2. Repair damage to PVC coatings or paint finishes with matching touchup coating recommended by manufacturer.

END OF SECTION 280528

SECTION 280544 - SLEEVES AND SLEEVE SEALS FOR ELECTRONIC SAFETY AND SECURITY PATHWAYS AND CABLING

PART 1 - GENERAL

1.1 RELATED DOCUMENTS

A. Drawings and general provisions of the Contract, including General and Supplementary Conditions and Division 01 Specification Sections, apply to this Section.

1.2 SUMMARY

A. Section Includes:

1. Sleeves for pathway and cable penetration of non-fire-rated construction walls and floors.
2. Sleeve-seal systems.
3. Sleeve-seal fittings.
4. Grout.
5. Silicone sealants.

B. Related Requirements:

1. Section 078413 "Penetration Firestopping" for penetration firestopping installed in fire-resistance-rated walls, horizontal assemblies, and smoke barriers, with and without penetrating items.
2. Penetration firestopping installed in fire-resistance-rated walls, horizontal assemblies, and smoke barriers, with and without penetrating items.

1.3 ACTION SUBMITTALS

A. Product Data: For each type of product.

B. LEED Submittals:

1. Product Data for Credit EQ 4.1: For sealants, documentation including printed statement of VOC content.
2. Laboratory Test Reports for Credit EQ 4: For sealants, documentation indicating that products comply with the testing and product requirements of the California Department of Health Services' "Standard Practice for the Testing of Volatile Organic Emissions from Various Sources Using Small-Scale Environmental Chambers."

PART 2 - PRODUCTS

2.1 SLEEVES

A. Wall Sleeves:

1. Steel Pipe Sleeves: ASTM A 53/A 53M, Type E, Grade B, Schedule 40, zinc coated, plain ends.
2. Cast-Iron Pipe Sleeves: Cast or fabricated "wall pipe," equivalent to ductile-iron pressure pipe, with plain ends and integral waterstop unless otherwise indicated.

B. Sleeves for Conduits Penetrating Non-Fire-Rated Gypsum Board Assemblies: Galvanized-steel sheet; 0.0239-inch (0.6-mm) minimum thickness; round tube closed with welded longitudinal joint, with tabs for screw-fastening the sleeve to the board.

C. PVC-Pipe Sleeves: ASTM D 1785, Schedule 40.

D. Molded-PVC Sleeves: With nailing flange for attaching to wooden forms.

E. Molded-PE or -PP Sleeves: Removable, tapered-cup shaped, and smooth outer surface with nailing flange for attaching to wooden forms.

2.2 SLEEVE-SEAL SYSTEMS

A. Description: Modular sealing device, designed for field assembly, to fill annular space between sleeve and pathway or cable.

1. Manufacturers: Subject to compliance with requirements, provide products by one of the following:

a. Advance Products & Systems, Inc.
b. CALPICO, Inc.
c. Metraflex Company (The).
d. Or Equal.

2. Sealing Elements: EPDM rubber interlocking links shaped to fit surface of pipe. Include type and number required for pipe material and size of pipe.
3. Pressure Plates: Carbon steel.
4. Connecting Bolts and Nuts: Carbon steel, with corrosion-resistant coating, of length required to secure pressure plates to sealing elements.

2.3 SLEEVE-SEAL FITTINGS

A. Description: Manufactured plastic, sleeve-type, waterstop assembly made for embedding in concrete slab or wall. Unit shall have plastic or rubber waterstop collar with center opening to match piping OD.

1. Manufacturers: Subject to compliance with requirements, provide products by one of the following:

    a. Presealed Systems.
    b. Or Equal.

2.4 GROUT

A. Description: Nonshrink; recommended for interior and exterior sealing openings in non-fire-rated walls or floors.

B. Standard: ASTM C 1107/C 1107M, Grade B, post-hardening and volume-adjusting, dry, hydraulic-cement grout.

C. Design Mix: 5000-psi (34.5-MPa), 28-day compressive strength.

D. Packaging: Premixed and factory packaged.

2.5 SILICONE SEALANTS

A. Silicone Sealants: Single-component, silicone-based, neutral-curing elastomeric sealants of grade indicated below.

1. Grade: Pourable (self-leveling) formulation for openings in floors and other horizontal surfaces that are not fire rated.
2. Sealant shall have VOC content of 250 g/L or less when calculated according to 40 CFR 59, Subpart D (EPA Method 24).
3. Sealant shall comply with the testing and product requirements of the California Department of Health Services' "Standard Practice for the Testing of Volatile Organic Emissions from Various Sources Using Small-Scale Environmental Chambers."

B. Silicone Foams: Multicomponent, silicone-based, liquid elastomers that, when mixed, expand and cure in place to produce a flexible, nonshrinking foam.

PART 3 - EXECUTION

3.1 SLEEVE INSTALLATION FOR NON-FIRE-RATED ELECTRICAL PENETRATIONS

A. Comply with NECA 1.

B. Comply with NEMA VE 2 for cable tray and cable penetrations.

C. Sleeves for Conduits Penetrating Above-Grade Non-Fire-Rated Concrete and Masonry-Unit Floors and Walls:

1. Interior Penetrations of Non-Fire-Rated Walls and Floors:

    a. Seal annular space between sleeve and pathway or cable, using joint sealant appropriate for size, depth, and location of joint. Comply with requirements in Section 079200 "Joint Sealants."
    b. Seal space outside of sleeves with mortar or grout. Pack sealing material solidly between sleeve and wall so no voids remain. Tool exposed surfaces smooth; protect material while curing.

2. Use pipe sleeves unless penetration arrangement requires rectangular sleeved opening.
3. Size pipe sleeves to provide 1/4-inch (6.4-mm) annular clear space between sleeve and pathway or cable unless sleeve seal is to be installed.
4. Install sleeves for wall penetrations unless core-drilled holes or formed openings are used. Install sleeves during erection of walls. Cut sleeves to length for mounting flush with both surfaces of walls. Deburr after cutting.
5. Install sleeves for floor penetrations. Extend sleeves installed in floors 2 inches (50 mm) above finished floor level. Install sleeves during erection of floors.

D. Sleeves for Conduits Penetrating Non-Fire-Rated Gypsum Board Assemblies:

1. Use circular metal sleeves unless penetration arrangement requires rectangular sleeved opening.
2. Seal space outside of sleeves with approved joint compound for gypsum board assemblies.

E. Roof-Penetration Sleeves: Seal penetration of individual pathways and cables with flexible boot-type flashing units applied in coordination with roofing work.

F. Aboveground, Exterior-Wall Penetrations: Seal penetrations using steel pipe sleeves and mechanical sleeve seals. Select sleeve size to allow for 1-inch (25-mm) annular clear space between pipe and sleeve for installing mechanical sleeve seals.

G. Underground, Exterior-Wall and Floor Penetrations: Install cast-iron pipe sleeves. Size sleeves to allow for 1-inch (25-mm) annular clear space between pathway or cable and sleeve for installing sleeve-seal system.

3.2 SLEEVE-SEAL-SYSTEM INSTALLATION

A. Install sleeve-seal systems in sleeves in exterior concrete walls and slabs-on-grade at pathway entries into building.

B. Install type and number of sealing elements recommended by manufacturer for pathway or cable material and size. Position pathway or cable in center of sleeve. Assemble mechanical sleeve seals and install in annular space between pathway or cable and sleeve. Tighten bolts against pressure plates that cause sealing elements to expand and make watertight seal.

3.3 SLEEVE-SEAL-FITTING INSTALLATION

A. Install sleeve-seal fittings in new walls and slabs as they are constructed.

B. Assemble fitting components of length to be flush with both surfaces of concrete slabs and walls. Position waterstop flange to be centered in concrete slab or wall.

C. Secure nailing flanges to concrete forms.

D. Using grout, seal the space around outside of sleeve-seal fittings.

END OF SECTION 280544

ITEM 600-SE-2 – VIDEO SURVEILLANCE SYSTEM

1. DESCRIPTION:

   Under this item the Contractor shall furnish and install a video surveillance system and communication network and associated power requirements as shown on the plans. Work shall include, but not be limited to:

   a. Removing existing cameras and reinstalling new cameras, and rerouting existing/new conduit and wire as shown on the plans and details.

   b. Furnishing and installation of all equipment necessary for the complete installation of a video surveillance system consisting of cameras and network with power components and accessories.

   c. Provide all labor and incidentals necessary. Contractor is responsible for coordinating and scheduling with the County for delivery and for providing safe storage, handling, and installation of the materials.

   d. Provide all necessary trenching, excavation, backfill, and power requirements.

   e. Contractor shall supply all power, switches, interconnecting power and data cable, conduit and terminations to identified access point for the system.

2. MATERIALS AND 3.CONSTRUCTION DETAILS:

   a. Video Surveillance System

      A. See Appendix A for Product Specifications for:

         1. Video Surveillance Cameras, monitors, DVR, controller, cabinet and associated equipment:
            All products as specified in attached Appendix A, or as approved equal.

      B. See Appendix B Reference Section 282300

      C. See Appendix E under Item 600-SE-1 Site Electrical and Lighting Work for Site Electrical Reference Section

4. METHOD OF MEASUREMENT AND 5. BASIS OF PAYMENT:

Payment shall be made under the lump sum amount for furnishing, storing, handling, installing, connecting and testing all video surveillance equipment and related electrical work, including but not limited to, cameras, mounting, brackets, power supplies, etc., and related wiring. The stipulated price shall include all work necessary and required for work as indicated and implied on the contract drawings and specified herein.

The lump sum price bid shall cover the cost of storing, testing, and installing all required items including, but not limited to, conductors, conduits, ductbank, splices, terminations, electrical components, hardware, junction boxes, panels boards, trenching, excavation, and back filling work through all stages of the project, and all incidentals, labor and materials necessary for the completion of this work as indicated on the drawings, implied and as specified herein, or as ordered by the Engineer and to his complete satisfaction.

Progress payments will be made as follows: A 40% payment will be made when 50% of the work has been placed; a second 40% payment will be made when 100% of the work has been placed; the final 20% payment will be made when the work is completed and accepted by the Engineer.

END OF SECTION

PTZ IP WP

Spectra® Enhanced 7 Series IP PTZ Domes

HIGH-SPEED PTZ, UP TO 30X, UP TO 4K, SUREVISION AND DEEP LEARNING CAPABLE

Product Features

- SureVision Technology, Including:
  - Up to 130 dB Wide Dynamic Range (WDR)
  - Advanced Low Light Down to 0.02 lux (Color), 0.013 lux (Mono)
  - Anti-Bloom Technology
  - 3D Noise Filtering
  - Enhanced Tone Mapping
- Up to 4K and up to 60 Images per Second (ips) Pan/Tilt Drive
- Robust Image Stabilization (EIS) with Gyro
- Built-in Pelco Enhanced Analytics Suite
- Pelco Advanced Analytics Capable
- Power over Ethernet (802.3bt), 24 VAC, 48 VDC
- H.264 and H.265 Pelco Smart Compression Technology
- Three Automatic Defog Options
- Vandal Resistant IK10 Housing and Smoked or Clear Bubble
- SD Card Slot with Support for SDXC Cards
- Compatible with Pelco and Third-Party Video Systems

- ONVIF Profile S, Profile G, and Profile T Conformant
- 3-Year Warranty and Support

Top of the Line IP Performance

Pelco's Spectra® Series of high speed IP PTZ domes provide top tier image quality, performance, and intelligent embedded features for state-of-the-art surveillance solutions. Low latency video and control make the camera incredibly easy to control. Direct Drive closed loop control enables blazing pan and tilt speeds up to 700 degree/second to position the camera on target avoiding perceived PT delays so that critical forensic evidence is captured. Direct Drive closed loop systems have advantages such as limited wear and tear and maintenance, extremely accurate positioning, and the camera always knows its position.

Power redundancy between PoE and 48 VDC/24 VAC ensures 24-hour, 365-day continuous operation even under unstable power supply situations.

Full High Definition SureVision Cameras

Spectra Enhanced Series IP PTZ domes feature up to 4K, up to 30x optical zoom. They run at up to 60 frames per second and provide up to 130dB of Wide Dynamic Range (WDR) with Pelco's latest SureVision low light performance.

Intelligent Imaging Features

The Spectra Enhanced Series PTZ domes have the capability to run deep learning DNN analytics. Included in all models are a Pelco Enhanced Suite of analytics including: Abandoned Object, Adaptive Motion Detection, AutoTracker, Camera Sabotage, Directional Motion, Loitering Detection, Object Counting, Object Removal, and Stopped Vehicle. Spectra Enhanced also allows for up to 16 window blanking privacy zones that are configurable with custom blurring options. Three levels of Image Defog provide options for enhancing the image on foggy or rainy days. Five White Balance modes are available for overcoming difficult lighting conditions day and night. A Vivid Imaging mode can be enabled to automatically increases color saturation and sharpening. Spectra Enhanced supports up to 2TB of onboard local storage (not supplied) that is easily accessible through the ONVIF Profile G protocol or FTP.

Intuitive Design

Spectra Enhanced Series features the same ease of installation and maintenance that the industry has come to expect from Spectra. Each dome system consists of a back-box, a dome drive, and an IK10 rated lower dome. There is a choice of three form factors: in-ceiling, environmental in-ceiling, and environmental pendant.

VMS Integration

Spectra Enhanced Series easily connects to Pelco IP and hybrid video systems such as VideoXpert, Endura 2.0 (or later), and Digital Sentry 7.3 (or later). The camera is also compatible with Digital Sentry NVS (DS NVS), a full-featured video management software, which is available as a free download at www.pelco.com. DS NVS includes four free Pelco IP licenses and allows for the management of video from up to 64 cameras.

Pelco endeavors to be the most open and integrated camera provider in the industry and as a part of that effort Spectra Enhanced is integrated with a long and ever-growing list of 3rd party software and Video Management Systems (VMS).

PELCO

BACK BOX FEATURES

NOTE: VALUES IN PARENTHESES ARE INCHES; ALL OTHERS ARE CENTIMETERS.

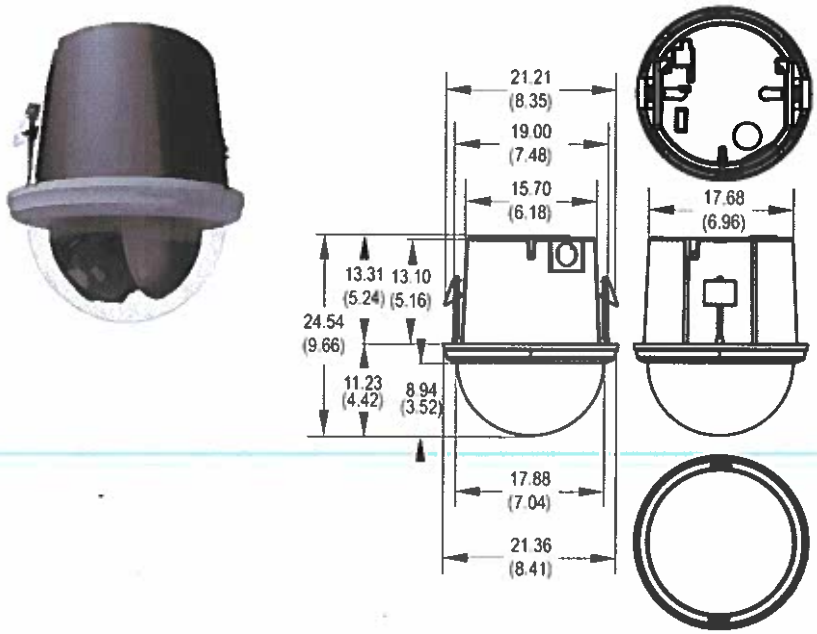

In-Ceiling (Indoor 4K)

- Single Back Box for Suspended or Hard Ceiling Applications with White Trim Ring, RAL9003
- Requires 13.35 cm (5.25 in.) Space Above Ceiling and 8.25 cm (3.25 in.) Below
- Minimum Ceiling Thickness 1.27 cm (0.50 in.); Maximum 4.45 cm (1.75 in.)
- Aluminum Construction, IK10 Rated Housing and Polycarbonate Bubble
- Suitable for Use in Environmental Air Handling Spaces
- –10° to 55°C (14° to 131°F) Sustained Operating Temperature

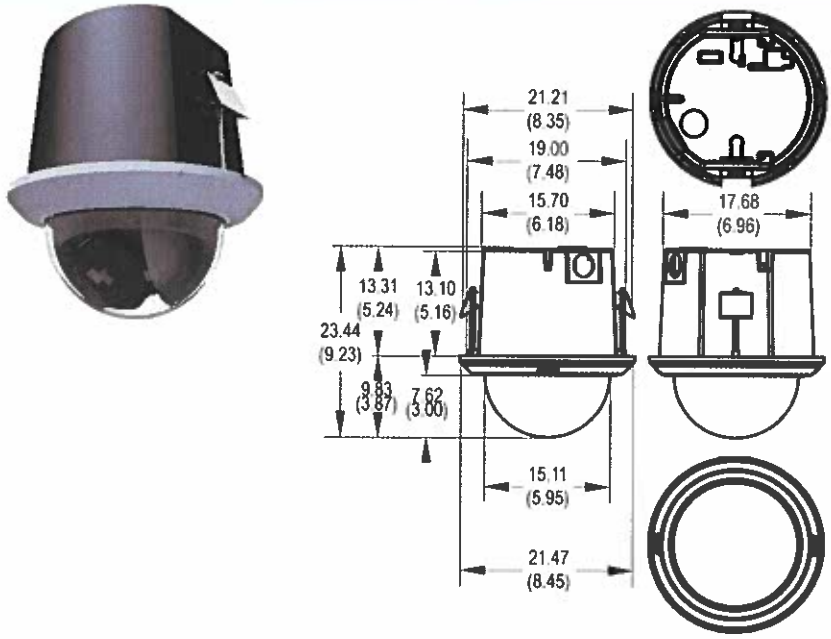

In-Ceiling (Indoor 2MP)

- Single Back Box for Suspended or Hard Ceiling Applications with White Trim Ring, RAL9003
- Requires 13.35 cm (5.25 in.) Space Above Ceiling and 8.25 cm (3.25 in.) Below
- Minimum Ceiling Thickness 1.27 cm (0.50 in.); Maximum 4.45 cm (1.75 in.)
- Aluminum Construction, IK10 Rated Housing and Nylon Bubble
- Suitable for Use in Environmental Air Handling Spaces
- –10° to 55°C (14° to 131°F) Sustained Operating Temperature

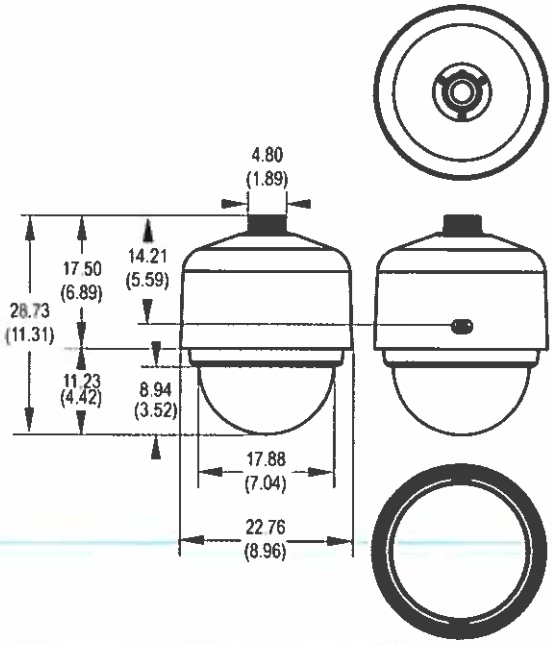

Environmental Pendant (4K)

- Environmental Pendant Available in White Finish (RAL9003) or Black Finish (RAL9017)
- Aluminum Construction, IK10 Rated Housing and Polycarbonate Bubble
- Meets IP66 and IP67
- Meets Type 4X
- Uses 1 1/2-inch NPT Thread
- Includes Heater, Blower, and Sun Shield
- –50° to 60°C (–58° to 140°F) Sustained Operating Temperature

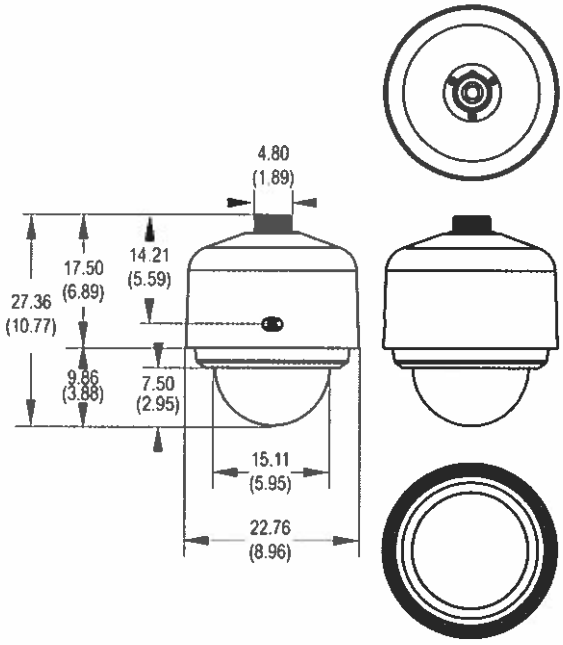

Environmental Pendant (2MP)

- Environmental Pendant Available in White Finish (RAL9003) or Black Finish (RAL9017)
- Aluminum Construction, IK10 Rated Housing and Nylon Bubble
- Meets IP66 and IP67
- Meets Type 4X
- Uses 1 1/2-inch NPT Thread
- Includes Heater, Blower, and Sun Shield
- –50° to 60°C (–58° to 140°F) Sustained Operating Temperature

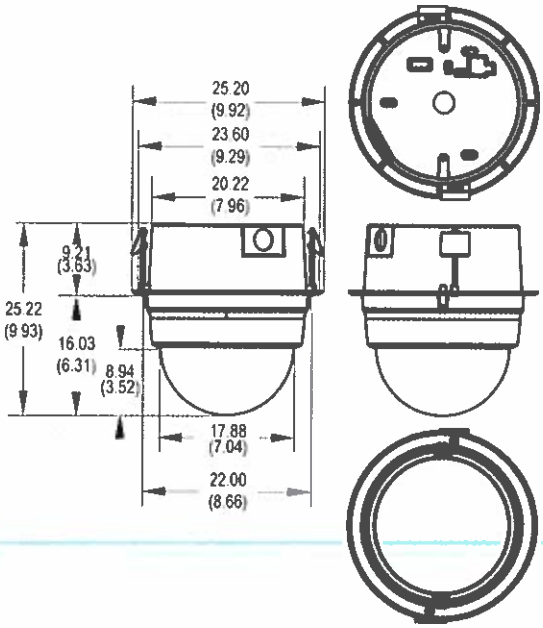

In-Ceiling (Environmental 4K)

- Single Back Box for Suspended or Hard Ceiling Applications with Black Trim Ring, RAL9017
- Requires 13.35 cm (5.25 in.) Space Above Ceiling and 8.25 cm (3.25 in.) Below
- Minimum Ceiling Thickness 1.27 cm (0.50 in.); Maximum 4.45 cm (1.75 in.)
- Aluminum Construction, IK10 Rated Housing and Polycarbonate Bubble
- Meets IP66 and IP67
- Meets Type 4X
- Includes Heater and Blower
- –50° to 60°C (–58° to 140°F) Sustained Operating Temperature

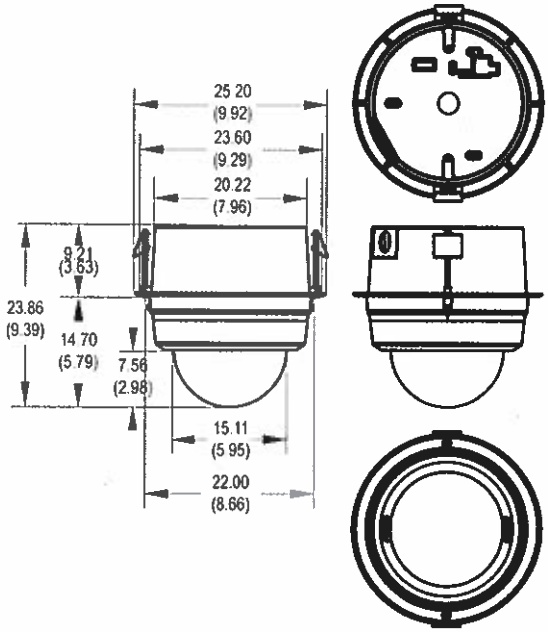

In-Ceiling (Environmental 2 MP)

- Single Back Box for Suspended or Hard Ceiling Applications with Black Trim Ring, RAL9017
- Requires 13.35 cm (5.25 in.) Space Above Ceiling and 8.25 cm (3.25 in.) Below
- Minimum Ceiling Thickness 1.27 cm (0.50 in.); Maximum 4.45 cm (1.75 in.)
- Aluminum Construction, IK10 Rated Housing and Nylon Bubble
- Meets IP66 and IP67
- Meets Type 4X
- Includes Heater and Blower
- –50° to 60°C (–58° to 140°F) Sustained Operating Temperature

CAMERA/OPTICS

Specification		30X Low Light	18X Low Light
Sensor Type		Progressive, 1/2.8-inch Type Exmor CMOS Sensor	Progressive, 1/1.8-inch CMOS Sensor
Optical Zoom		30X	18X
Digital Zoom		12X	12X
Maximum Resolution		1920 x 1080	3840 x 2160
Lens		f/1.6 ~ f/4.7, focal length 4.3 mm (wide) ~ 129.0 mm (tele)	f/1.5 ~ f/3.4, focal length 6.36 mm (wide) ~ 138.5 mm (tele)
Horizontal Angle of View		59.8° wide - 2.3° tele	57.9 wide - 3.0 tele
Aspect Ratio		16:9	16:9
Light Sensitivity	Color (33 ms)	0.02 lux (Color)	0.10 lux
	Color (250 ms)	0.0025 lux (Color)	0.0125 lux
	Mono (33 ms)	0.013 lux (Mono)	0.066 lux
	Mono (250 ms)	0.0016 lux (Mono)	0.0085 lux
		Note: Sensitivity in lux for 90% reflectance, f/1.6 (wide angle), 50 dB gain at 30 IRE (30% of signal level) with Sensitivity Boost OFF; 4X improvement to sensitivity with Sensitivity Boost ON	
Day/Night Capabilities		Yes	Yes
Shutter Range		1/1 ~ 1/10,000 sec	1/10,000 ~ 1 sec
Signal-to-Noise Ratio		>50dB	>50dB
IR Cut Filter		Yes	Yes
Wide Dynamic Range		Up to 130 dB maximum; 120 dB per IEC 62676-5	Up to 130 dB maximum; 120 dB per IEC 62676-5
Iris Control		Auto iris with manual override	Auto iris with manual override
Backlight Compensation		Yes	Yes
Automatic Gain Control		Yes	Yes
Active Noise Filtering		3D Noise Filtering	3D Noise Filtering
Electronic Image Stabilization (EIS)		Yes	Yes
Bit Rate Control		Constrained variable bit rate (CVBR) and constant bit rate (CBR)	
Video Snapshot		JPEG capture at the same resolution as the highest stream configured	
Window Blanking		16 configurable Windows	
Video Overlay		Camera name, time, date, and customizable text with multiple supported languages. Embedding of custom images and logos supported.	
Flicker Correction		Selectable Auto On/Off, 50 Hz or 60 Hz modes	

SOFTWARE FEATURES

- 256 presets
- 32 tours
- ±0.05° preset accuracy
- 8 configurable scans
- Patterns–8 recordable patterns (up to 5 minutes each)
- Multilingual menus (English, Spanish, Portuguese, Italian, German, French, Russian, Turkish, Simplified Chinese, and Korean)
- Password protection
- 16 window blanks, configurable in size
- "Auto Flip" feature rotates dome 180° at bottom of tilt travel
- Configurable park with actions
- Proportional pan/tilt continually decreases pan/tilt speeds in proportion to depth of zoom
- Pelco analytics including nine user-configurable behaviors
- Multiple DNN analytic behaviors
- Image Defog modes

PELCO ENHANCED ANALYTICS SUITE

Spectra Enhanced range cameras includes two Basic and eight Enhanced user-configurable behaviors to enhance the flexibility and performance of the camera. The camera is capable of running up to two Enhanced behaviors in addition to the two Basic behaviors at the same time.

For each behavior, you can set up different scenarios for the behavior, which will automatically detect and trigger alarms when specific activity is detected.

Analytics are configured and enabled using a standard Web browser, and behavior alarms are compatible with VideoXpert or a third-party system that supports Pelco's API.

Available Basic analytic behaviors include:

- **Camera Sabotage:** Detects contrast changes in the field of view. An alarm is triggered if the lens is obstructed by spray paint, a cloth, or a lens cap. Any unauthorized repositioning of the camera also triggers an alarm.
- **Region-Based Simple Motion Detection:** Based on sensitivity, the camera determines if sufficient motion is detected within a configurable region.

Available Enhanced analytic behaviors include:

- **Abandoned Object:** Detects objects placed within a defined zone and triggers an alarm if the object remains in the zone unattended. An airport terminal is a typical installation for this behavior. This behavior can also detect objects left behind at an ATM, signaling possible card skimming.
- **Adaptive Motion:** Detects and tracks objects that enter a scene and then triggers an alarm when the objects enter a user-defined zone. This behavior is primarily used in outdoor environments with light traffic to reduce the number of false alarms caused by environmental changes.
- **AutoTracker:** Detects and tracks movement in the field of view. When the AutoTracker behavior is configured, the system automatically pans and tilts to follow the moving object until the object stops or disappears from the monitored area.
- **Directional Motion:** Generates an alarm in a high traffic area when a person or object moves in a specified direction. Typical installations for this behavior include an airport gate or tunnel where cameras can detect objects moving in the opposite direction of the normal flow of traffic or an individual entering through an exit door.
- **Loitering Detection:** Identifies when people or vehicles remain in a defined zone too long. This behavior is effective in real-time notification of suspicious behavior around ATMs, stairwells, and school grounds.
- **Object Counting:** Counts the number of objects that enter a defined zone. This behavior can be used to count the number of people at a store entrance/exit or inside a store where the traffic is light. This behavior is based on tracking and does not count people in a crowded setting.
- **Object Removal:** Triggers an alarm if an object is removed from a user-defined zone. This behavior is ideal for customers who want to detect the removal of high value objects, such as painting from a wall or a statue from a pedestal.
- **Stopped Vehicle:** Detects vehicles stopped near a sensitive area longer than the user-defined time allows. This behavior is idea for airport curbside drop-offs, parking enforcement, suspicious parking, traffic lane breakdowns, and vehicles waiting at gates.

VIDEO

Video Encoding	H.264 High, Main, or Base profiles, H.265 Main profile, and MJPEG
Video Streams	Up to 3 simultaneous streams; the second stream is variable based on the setup of the primary stream
Frame Rate	Up to 60, 50, 30, 25, 20, 15, 12.5, 10, 8.333, 7.5, 6, 5, 3, 2.5, 2, 1 (depending on the coding, resolution, and stream configuration)
Highest Resolution	
4K models	3840 x 2160
2MP models	1920 x 1080

NETWORK

Supported Protocols	TCP/IP, UDP/IP (Unicast, Multicast IGMP), UPnP, DNS, DHCP, autoconf, static, RTP, RTSP, RTCP, NTP, IPv4, IPv6*, SNMP v2c/v3, QoS, HTTP, HTTPS, SNMP v2, v3, SSL, SSH, TLS, TTLS, WS-discovery, SMTP, FTP, 802.1x (EAP), ARP, ICMP, and NTCIP 1205
Users	
Unicast	Up to 20 simultaneous users depending on resolution settings (2 guaranteed streams)
Multicast	Unlimited users
Security Access	Password protected
Software Interface	Web browser view and setup
Pelco System Integration	Endura 2.0 (or later) Digital Sentry 7.3 (or later)
Open API	Pelco API or ONVIF Profile S, G, and T
Mobile Application	Integrated to Pelco Mobile App

MINIMUM SYSTEM REQUIREMENTS

Processor	Intel® Core™ i3 Processor, 2.4 GHz
Operating System	Windows® 10 Windows 7 (32-bit and 64-bit) or Mac® OS X 10.4 (or later)
Memory	4 GB RAM
Network Interface Card	100 megabits (or greater)
Web Browser	Internet Explorer® 8.0 (or later) or Firefox 71 (or later); Chrome 81 (or later); Internet Explorer 8.0 (or later) is recommended for configuring analytics

ANALYTICS

Required Systems for Pelco Analytics

Pelco Interface	VideoXpert; VX Toolbox; Endura 2.0 (or later); Digital Sentry 7.3 (or later)
Open API	The Pelco API can transmit behavior alarm data to third-party applications, available at *pdn.pelco.com*

GENERAL

Construction	
Back Box	Aluminum
Dome Drive	Aluminum, thermoplastic
Lower Dome	Nylon for 2 MP models, polycarbonate for 4K models
Light Attenuation	
Smoked	f/0.5 light loss
Clear	f/0.0 light loss
Cable Entry (back box)	
In-Ceiling	0.75-inch conduit fitting
Pendant	Through 1.5-inch NPT pendant mount

Unit Weight	(1080p models)	(4K models)
In-Ceiling, Indoor	3.0 kg (6.6 lb)	3.2 kg (7.05 lb)
In-Ceiling, Environmental	3.4 kg (7.5 lb)	3.6 kg (7.94 lb)
Pendant, Environmental	3.9 kg (8.6 lb)	4.1 kg (9.04 lb

Effective Projected Area (EPA)	
Pendant	Without mount and with sun shield, 47 square inches With IWM Series mount with sun shield, 96.5 square inches

ALARM

Unsupervised	Detects open or closed alarm state
Supervised	Detects open and short alarm state with external 1-kohm resistor
Inputs (4)	3.5 VDC maximum, 3.5 mA maximum
Relay Outputs (2)	±32 VDC maximum, 150 mA maximum

AUDIO

Audio	Bidirectional, full duplex
Input	Line level; 3-kohm differential impedance, 1Vp-p maximum signal level
Output	Line level, 600-ohm differential impedance, 1Vp-p
Streaming	Embedded audio

STORAGE

Local Storage	SD card slot with support for SDXC cards Capture 1–5–10 second video clips on camera sabotage, motion detection, or alarm input; record video continuously in the case of network outage with option to overwrite; access video through FTP protocol and ONVIF Profile G

* Supports mixed IPv4 and IPv6 installations, but not IPv6-only deployments.

[1] Pelco Media Player is recommended for control, smoothness, and reduced latency as compared to QuickTime.

OPERATING TEMPERATURE

In-Ceiling (Indoor):	
Operating Temperature	–10°C to 55°C (14°F to 131°F)
Cold Start	–10° C
Environmental Units:	
Sustained Operating Temperature	–51°C to 60°C (–59.8°F to 140°F)
Absolute Max Operating Temperature	65°C (4 hours per day)
Cold Start	–40°C (–40°F)
Ice Free	–20°C (–4°F)
De-Ice	–20°C (–4°F)
Storage Temperature	–20°C to 65°C (–4°F to 149°F)
Storage Humidity	5 to 95% (non-condensing)

OPERATING HUMIDITY

In-Ceiling (Indoor)	10 to 90% RH (noncondensing)
Environmental In-Ceiling, Environmental Pendant	10 to 100% RH

MECHANICAL

(Dome Drive Only)

Variable Speed	0.05° to 100°/sec (manual pan speed)
Preset Accuracy	±0.05°
Pan Movement	360° continuous pan rotation
Vertical Tilt	+1° to –90°
Maximum Pan Speed	Up to 700° per second
Maximum Tilt Speed	Up to 500° per second
Manual Pan/Tilt Speeds	
Pan	0.05° to 100°/sec manual operation
Tilt	0.05° to 50°/sec manual operation
Preset Speeds	
Pan	700°/sec
Tilt	500°/sec

WIND SPECIFICATIONS

Full Motion Control	0 to 130 knots (150 mph/241 kmh)

PELCO'S SMART COMPRESSION TECHNOLOGY

Pelco's Smart Compression Technology lowers bandwidth and storage requirements by up to 70%, while reducing storage requirements.

Pelco's Smart Compression Technology dynamically analyzes motion occurring within live video in real-time, to intelligently compress the information you don't need, while retaining details with clear quality in the areas that are important in the scene. By enabling Dynamic GOP, an added feature of Smart Compression, the number of I-frames are automatically reduced in scenes with low motion. Based on the complexity of scenes and motion occurring, such as a store room that has limited entry and exit, up to 70% bandwidth savings can be achieved.

PELCO CAMERA LINK

Pelco Camera Link technology brings together the best of two flagship Pelco products: You get the seamless and continual situational awareness of Optera across a wide space along with the ability to automatically zoom in for great detail with nearby Spectra Enhanced and follow people and vehicles closely.

POWER REDUNDANCY

Spectra Enhanced 7 range cameras are designed with Power over Ethernet (PoE), 24 VAC and 48 VDC to reduce costs and simplify planning, wiring, and installation. PoE functionality works with PoE-enabled network switches or power injectors, eliminating the need for separate power supplies and cabling, and increasing camera fail safety through an interruptible power supply (UPS).

The cameras also support power supply failover between PoE and 48 VDC/24VAC and allow a primary power source selection for the power draw. If the camera is running with both PoE and 48 VDC/24 VAC power sources, and then the primary power source is lost, the camera will switch to an alternative source without any interruption or video loss. Once primary power is restored, the camera seamlessly switches back to the primary source.

ELECTRICAL

Ports	RJ-45 connector for 100Base-TX as well as 1000Base-TX Auto MDI/MDI-X Autonegotiate/manual setting
Cabling Type	Cat5e or better
SFP/FSFP Interface	Supports Pelco FSFP Series transceivers and third-party MSA complaint transceivers
Input Voltage	20 to 32 VAC; 24 VAC nominal 42 to 53 VDC; 48 VDC nominal
Input Power	
24 VAC	2 A (30 VA) maximum for indoor or environmental units without heater
	4.8 A (71 VA) maximum for environmental unit with heater
48 VDC	1 A (40 W) maximum for indoor or environmental units without heater
	1.9 A (80 W) maximum for environmental unit with heater
PoE (802.3bt)	0.7 A (32 W) maximum for indoor or environmental units without heater
	1.3 A (70 w) maximum for environmental unit with heater
PoE (802.3at)	0.5 A (25 W) maximum for indoor models only and ambient temperatures above –10°C

CERTIFICATIONS/RATINGS/PATENTS

- CE (Class A)
- FCC (Class A)
- ICES-003 (Class A)
- UL/cUL Listed
- UL/IEC/EN 60950-1, 60950-22, 62368-1
- KC
- NOM
- RCM
- EAC*
- BIS
- Environmental models:
  - Type 4X
  - EN 50155 (EN 61373 Category 1, Class B)
  - IEC/EN 60068-2-1 Cold
  - IEC/EN 60068-2-2 Dry Heat
  - IEC/EN 60068-2-6 Product Vibration
  - IEC/EN 60068-2-14 Change of Temperature
  - IEC/EN 60068-2-27 Product Shock
  - IEC/EN 60068-2-30 Damp Heat (Cyclic)
  - IEC/EN 60068-2-78 Damp Heat (Steady-State)
  - IEC/EN 62262 Impact (IK 10)
  - IEC/EN 60529 (IP66, IP67)
- IEC 62676-5 Data specifications and image quality performance for camera devices
- Meets NEMA TS2 para 2.2.7 - 2.2.9 (Environmental models)
- FDOT (Environmental models)*
- Cisco® Medianet Media Services Proxy 2.0 compatible
- ONVIF Profile S, Profile G, and Profile T Conformant
- U.S. Patents 5,931,432; 6,793,415 B2; 6,802,656 B2; 6,821,222 B2; 7,161,615 B2

*At the time of this publication, certifications are pending. Consult the factory or www.pelco.com for the current status of certifications.

SYSTEM MODEL NUMBERS

Type	Back Box Color	Trim Ring Color	Bubble	System Resolution	Model Number	Dome Description
In-ceiling, Indoor 2MP	Black	White	Smoked	2 MP 30X	S7230L-FW0	Spectra Enh7 1080p 30X Indoor In-Ceiling White Smoked Bubble
			Clear	2 MP 30X	S7230L-FW1	Spectra Enh7 1080p 30X Indoor In-Ceiling White Clear Bubble
In-ceiling, Environmental 2MP	Black	Black	Smoked	2 MP 30X	S7230L-YB0	Spectra Enh7 1080p 30X Env In-Ceiling Black Smoked Bubble
			Clear	2 MP 30X	S7230L-YB1	Spectra Enh7 1080p 30X Env In-Ceiling Black Clear Bubble
Pendant, Environmental 2MP	White	Black	Smoked	2 MP 30X	S7230L-EW0	Spectra Enh7 1080p 30X Env Pendant White Smoked Bubble
			Clear	2 MP 30X	S7230L-EW1	Spectra Enh7 1080p 30X Env Pendant White Clear Bubble
Pendant, Environmental 2MP	Black	Black	Smoked	2 MP 30X	S7230L-EB0	Spectra Enh7 1080p 30X Env Pendant Black Smoked Bubble
			Clear	2 MP 30X	S7230L-EB1	Spectra Enh7 1080p 30X Env Pendant Black Clear Bubble
In-ceiling, Indoor 4K	Black	White	Smoked	4 K 18X	S7818L-FW0	Spectra Enh7 4K 18X Indoor In-Ceiling White Smoked Bubble
			Clear	4 K 18X	S7818L-FW1	Spectra Enh7 4K 18X Indoor In-Ceiling White Clear Bubble
In-ceiling, Environmental 4K	Black	Black	Smoked	4 K 18X	S7818L-YB0	Spectra Enh7 4K 18X Env In-Ceiling Black Smoked Bubble
			Clear	4 K 18X	S7818L-YB1	Spectra Enh7 4K 18X Env In-Ceiling Black Clear Bubble
Pendant, Environmental 4K	White	Black	Smoked	4 K 18X	S7818L-EW0	Spectra Enh7 4K 18X Env Pendant White Smoked Bubble
			Clear	4 K 18X	S7818L-EW1	Spectra Enh7 4K 18X Env Pendant White Clear Bubble
Pendant, Environmental 4K	Black	Black	Smoked	4 K 18X	S7818L-EB0	Spectra Enh7 4K 18X Env Pendant Black Smoked Bubble
			Clear	4 K 18X	S7818L-EB1	Spectra Enh7 4K 18X Env Pendant Black Clear Bubble

COMPONENT MODEL NUMBERS

2MP and 4K Back Box	
B7-F	In-ceiling Indoor
B7-F-E	In-ceiling, Environmental
B7-PW-E	Pendant Environmental, White
B7-PB-E	Pendant Environmental, Black

*Use the environmental lower domes with the environmental in-ceiling and environmental pendant back boxes.

High Definition (HD) Lower Dome*	
LD7F-0	Indoor, White, Smoked, 1080p
LD7F-1	Indoor, White, Clear, 1080p
LD7PB-0	Environmental, Black, Smoked, 1080p
LD7PB-1	Environmental, Black, Clear, 1080p
LD7AF-0	Indoor, White, Smoked, 4K
LD7AF-1	Indoor, White, Clear, 4K
LD7APB-0	Environmental, Black, Smoked, 4K
LD7APB-1	Environmental, Black, Clear, 4K

Dome Drive	
D7230L	1080p 30X
D7818L	4K 18X

RECOMMENDED MOUNTS

Pendant Domes

IWM Series	Wall mount, white or black finish, can be adapted for corner, parapet, or pole application
IWM-MKIT	Marine kit is designed to protect the Spectra Series dome system mounted to the IWM arm from galvanic corrosion.
IWM24 Series	Wall mount, with integral 24 VAC, 100 VA transformer, white or black finish, can be adapted for corner, parapet or pole application
PP350/PP351	Parapet wall/roof mount
SWM Series	Compact wall mount, white or black finish; can be adapted for corner or pole applications
IDM4012SS-SW	Mount arm feed-thru, stainless steel, RAL 9003
IDM4018-SW	Mount arm feed-thru, white, RAL 9003

OPTIONAL ACCESSORIES

POE90U1BT-EUK	90W HPoE 802.3BT single port injector EU and UK power cord included
POE90U1BT-US	90W HPoE 802.3BT single port injector US power cord included
POE90U1BT	90W HPoE 802.3BT single port injector power cord not included
WCS1-4 Model (WCS Series)	Outdoor single 24 VAC power supply power cord not included
ECPS-48VDC-5A	48 VDC indoor power supply

In-Ceiling Domes

SD5-P	2' x 2' ceiling panel, aluminum construction; replaces 2' x 2' ceiling tile
SCA1	Support rails for B7-F, for use in ceiling tile applications

⚠**WARNING:** Cancer and Reproductive Harm - www.P65Warnings.ca.gov.
⚠**ADVERTENCIA:** Cáncer y Daño Reproductivo - www.P65Warnings.ca.gov.
⚠**AVERTISSEMENT:** Cancer et Troubles de l'appareil reproducteur - www.P65Warnings.ca.gov.

Pelco, Inc.
625 W. Alluvial, Fresno, California 93711 United States
USA & Canada Tel (800) 289-9100 Fax (800) 289-9150
International Tel +1 (559) 292-1981 Fax +1 (559) 348-1120
www.pelco.com

Quick Reference Guide: PTZ Specialty Cameras

PELCO

Positioning Camera Systems

	Spectra® Enhanced with SureVision PTZ Dome				Spectra® 7 Enhanced with SureVision PTZ Dome		
							
	30X	Environmental/Outdoor		Indoor	30X	Environmental	Indoor
Model/Item Number	Pendant	S6230-EGL0	S6230-ESGL0	S6230-PGL0	Pendant	S7230L-EW0	
		S6230-EGL1	S6230-ESGL1	S6230-PGL1		S7230L-EW1	
				S6230-PBL0		S7230L-EB0	
				S6230-PBL1		S7230L-EB1	
	In-Ceiling	S6230-YBL0		S6230-FWL0	In-Ceiling	S7230L-YB0	S7230L-FW0
		S6230-YBL1		S6230-FWL1		S7230L-YB1	S7230L-FW1
Description	Full HD 1080p 60ips, High Speed PTZ Dome True Double Exposure WDR (up to 130dB, Ultra Low Light) 30x optical zoom, Lens Easy to drive, low latency PTZ, Single cable installation (PoE)				Full HD 1080p 60ips, High Speed PTZ Dome True Double Exposure WDR (up to 130dB, Ultra Low Light) 30x optical zoom, Lens Easy to drive, low latency PTZ, Single cable installation (PoE)and deep learning capable		
Max Resolution	1920 x 1080 (2.1MP)						
Lens	f/1.6 – f/4.7, focal length 4.3 mm (wide) – 129.0 mm (tele)						
Day/Night	Yes						
WDR	Yes, Up to 130dB						
Light Sensitivity	As low as 0.02 lux				As low as 0.013		
Pan/Tilt Features	Proportional Pan/Tilt Continually Decreases Pan/Tilt Speeds in Proportion to Depth of Zoom Easy to drive, low latency PTZ				Proportional Pan/Tilt to drive, low latency PTZ series 7 direct drive speeds up to 700°/sec, ±0.05° accuracy and low maintenance		
Power Input	Series 6: 24 VAC, 24 VDC, PoE+, HPoE				Series 7: 24 VAC, 48 VDC, PoE (802.3bt)		
Environment	Indoor / Outdoor						
Mounts	SD5-P, SCA1, BB5-PCA, BB5-PCA, IWM, MRCA, PP350/PP351, SWM, IDM4012SS						

	Spectra® Professional PTZ Dome				Spectra® Professional IR & IR 4K	Esprit® Enhanced IP Positioning Systems					
											
	20X		Environmental	Indoor							
Model/Item Number	Pendant	Smoked w/ light gray trim	P1220-ESR0		P2230L-ESR (2.1 MP), P2820-ESR (4K)	Standard	ES6230-02	ES6230-05	-	-	-	-
		Clear w/ light gray trim	P1220-ESR1									
		Smoked w/ white trim		P1220-FWH0								
		Clear w/ white trim		P1220-FWH1								
	In-Ceiling	Smoked w/ light gray trim	P1220-YSR0			With Wiper	ES6230-12	ES6230-15	ES6230-12-R2	ES6230-15-R2	ES6230-12-RWUS	ES6230-15-RWUS
		Clear w/ light gray trim	P1220-YSR1									
		Smoked w/ white trim		P1220-FWH0		Pressurized With Wiper	ES6230-12P	ES6230-15P	ES6230-12P-R2	ES6230-15P-R2	ES6230-12P-RWUS	ES6230-15P-RWUS
		Clear w/ white trim		P1220-FWH1								
Description	Full HD 1080p 30ips, High Speed PTZ Dome, 20X optical zoom				Full HD 4K & 1080p 30/60ips, High Speed PTZ Dome, 20X optical zoom	Full HD 1080p 30ips, Up to 30X optical zoom, WDR, Built-In Analytics Suite, PTZ & Enclosure with Integrated Optics Package or Pressurized Integrated Optics Cartridge					
Max Resolution	1920 x 1080 (2.1MP)				2230 x 1080p(2.1MP) 2820 x 2160p(8.0MP)	1920 x 1080 (2.1 MP)					
Lens	4.3mm – 86.0mm, 20x optical zoom				2.1 MP:4.3–129mm, 30x Optical zoom 4K: 4.4–8.47mm, 20x Optical zoom	4.3mm (wide) – 129.0mm (tele) 30x optical zoom					
Day/Night	Yes				Yes	Yes					
WDR	Yes, 60dB				2.1 MP: WDR 120dB, 4K: HDR 72dB	Yes, 130dB					
Light Sensitivity	0.3 lux				2.1 MP: 0.3 lux, 4K: 1.0 lux	0.03 lux					
Pan/Tilt Features	360° continuous pan/Proportional Pan/Tilt Continually Decreases Pan/Tilt Speeds in Proportion to Depth of Zoom				360° continuous pan, Tilt Range +15° to –90° Degrees	360° continuous pan rotation, vertical tilt unobstructed +40° to -90°					
Power Input	18 to 32 VAC; 24 VAC nominal, PoE+ (Indoor models)				18 to 32 VAC; 24 VAC nominal, PoE+ (Indoor models)	HPoE, 24 VAC, 48 VDC or 100 to 240 VAC at 50/60 Hz				48VDC or 100 to 240 VAC at 50/60 Hz	
Environment	Indoor / Outdoor / Stainless				Outdoor	Outdoor					
Mounts	IWM, WMVE, MRCA, PP350/PP351				IWM-SR, WMZ4-SR, WMVE-SR, PP350/PP351	EPP2, EWM, EPM, ECM-101, PM2000/PM2010					

Specialty Cameras

	ExSite® Enhanced	ExSite® Enhanced Fixed		Sarix® IBD High-Security Corner Mount Camera		Sarix Ti Fixed Thermal	Esprit Ti PTZ Thermal
							
Model/Item Number	EX P1230-4N, EXP1230-7N EXP1230-7M (2.1 MP)	EXF1230-4N, EXF1230-7N	Model/Item Number	IBD129-1 (1.2 MP), IBD329-1 (3.2 MP)	Model/Item Number	TI2314, TI2335, TI2350, TI2614, TI2635, TI2650	ESTI2619, ESTI2635, ESTI2650, ESTI26100
Description	Explosion Proof PTZ		Description	Sarix High Security Corner Mount Camera	Description	Sarix Ti Fixed Thermal Fixed Camera	Esprit TI PTZ Thermal Camera
Max Resolution	1920 x 1080 (2.1 MP)		Max Resolution	1280 x 960 (1.2 MP), 2048 x 1536 (3.2 MP)	Dual Channel	Yes - Visual/Thermal	No
Lens	f/1.6 – f/4.7, focal length 4.3mm (wide) – 129.0mm (tele) (30x Optical, 12x Digital)		Lens	1.8mm	Max Resolution	HD 720p / QVGA and HD 720p / VGA models	VGA models
Day/Night	Yes		Day/Night	Yes	Lens	52° visual / 14, 35, 50 mm thermal	19, 35, 50, and 100mm thermal options
WDR	130dB		WDR	Yes, 90dB	Imager	Uncooled 17μ microbolometer 7.5 – 14μm	Uncooled 17μ microbolometer 7.5 – 14μm
Light Sensitivity	Color (33 ms) 0.03 lux, Color (250 ms) 0.008 lux, Mono (33 ms) 0.004 lux, Mono (250 ms) 0.001 lux		IR Illumination	Yes, No glow 10M	NETD	<40° mK	<50° mK
Pan/Tilt Features	360° Continuous Pan Rotation, Tilt Range of +90° to –90° from Horizontal	N/A	Pan/Tilt Features	N/A	Power	24 VDC Nominal (12 to 32 VDC) or PoE+ (IEEE802.3at)	24 VDC Nominal (12 to 32 VDC)
Power	48 VDC or 100-240 VAC		Power	PoE, 24 VAC, 12 VDC	Pan/Tilt	No	360° of continuous pan rotation. The tilt range is up to 90° to -30°
Environment	IP66, IP67, IP68, NEMA Type 4X & Type 6		Environment	Vandal resistant, IK10+, 50 joule, IP66	Environment	IP66	IP66
Mounts	WXM200, CMXM200, PXM200, PAXM200, AXM200		Mounts	Die cast aluminum, corner-mount design	Accessories	TICAB-P50, TIWM, TIPM	ESTICAB-P50, ESTIWM, ESTIPM, ESTIPA, ESTIPS-US, ESTIPS-EU

IntuiKey Series Keyboards

www.boschsecurity.com

BOSCH
Invented for life

- Control matrix, DVR, and IP video products with one keyboard
- Soft keys allow for product-specific menus
- Backlit keys and easy-to-read displays
- Simplified system programming with an intuitive interface
- Multilingual support

The IntuiKey Series keyboards are full function, multipurpose keyboards used for system control and programming. The IntuiKey includes an integral variable speed pan/tilt/zoom (PTZ) joystick and a splash resistant design. An optional rack mount kit allows the IntuiKey to be mounted in a standard EIA 48 cm (19 in.) rack.

Functions

The IntuiKey Digital Keyboard is available in two models, KBD-Universal and KBD-Digital. The Universal version can be connected to an Allegiant switcher and either Divar Digital Video Recorders or System4 Multiplexers at the same time. This capability eliminates the need for multiple keyboards. The KBD-Digital version supports Divar Digital Video Recorders and System4 Multiplexers. Both types can be used with the Bosch VMS and with the VIDOS video management systems.
The IntuiKey accepts both the standard Allegiant RS-485 Keyboard protocol and the Allegiant RS-232 protocol. The Allegiant RS-232 Keyboard protocol is well suited when communicating to a remote KBD-Universal over an IP network.

The IntuiKey can also operate in a Terminal mode using a special RS-232 protocol. This mode allows third-party integrators and internal developers to use the IntuiKey as a customizable user interface.[1]
The main Allegiant switcher, the Divar Digital Video Recorder, or the System4 Multiplexer provides power when used in a local configuration. At remote distances, an optional auxiliary power supply (sold separately) provides power.
The keyboard is connected to a system using a supplied 3 m (10 ft) cable. Simply attach the keyboard and the system is operational. No additional programming is required.
The IntuiKey's soft keys provide a menu-driven system for ease of use. The soft keys make it easy for new operators to program and control even the largest systems without memorizing system commands.
The IntuiKey features a quick selection menu function, providing immediate access to the most commonly used screen displays.
The IntuiKey also features a user-friendly menu tree approach for programming all advanced system and camera settings. Languages available via the IntuiKey unit are English, Spanish, Dutch, French, German, Italian, Polish, Portuguese, Turkish, Hungarian, Swedish, Finnish, and Danish. Additional languages

can be downloaded from the IntuiKey section of www.boschsecurity.us. The additional languages are: Norwegian, Greek, Czech, Russian, Slovak, Arabic, Simplified Chinese, Traditional Chinese, Korean, and Japanese.

1. Contact your local Bosch Security System sales representative for details about obtaining Terminal mode protocol information.

Certifications and approvals

Electromagnetic Compatibility (EMC)	Complies with FCC Part 15, ICES-003, and CE regulations
Product Safety	Complies with CE regulations, UL, CSA, EN, and IEC Standards

Region	Certification
Europe	CE

Technical specifications

Electrical

Operating Voltage	
12–15 VAC/DC (supplied by one, or a combination of Allegiant switchers, Divar Digital Video Recorder, System4 Multiplexers, or optional power supply)	
Power	5 W nominal
Allegiant Signal	RS-485: 2-wire, 9600 Baud, 8 bits, no parity, 1 stop bit RS-232: 3-wire, 9600 Baud, 8 bits, no parity, 1 stop bit
Mux/DVR Signal	RS-485: 2-wire, 19,200 Baud, 8 bits, no parity, 1 stop bit
Terminal Mode Signal	RS-232: 3 wire, 9600 Baud, 8 bits, no parity, 1 stop bit
Console Signal	RS-232 RTS/CTS handshaking, 19,200/57600 Baud, 8 bits, no parity, 1 stop bit

Mechanical

Construction Finish	Charcoal
Width	327 mm (12.9 in.)
Depth	190 mm (7.5 in.)
Height	75 mm (2.9 in.)
Weight	1.1 kg (2.6 lb)
Allegiant Connector	RJ-11 data/power
Mux/DVR Connector	RJ-11 data/power
Aux Power Connector	Bayonet plug (optional)
Console Connector	Male, 9-pin D-sub

Environmental

Enclosure	Splash-resistant
Temperature	
Operating	0°C to 50°C (32°F to 122°F)
Storage	–20°C to 50°C (–4°F to 122°F)
Relative Humidity	10%–90%, non-condensing

Compatibility

Allegiant	Backwards compatible with all systems using variable speed protocol (CPU firmware 5.3 and higher, released 6/94)
Divar	All models
System4	Backwards compatible with all System4 Multiplexers
BVMS	Version 1.10 or later
VIDOS	Version 3.0 or later

Optional Software

IntuiKey Script Application (ISA)	The IntuiKey Script Application is a PC-based software program used to customize the macro buttons in the Command Script menu screens of the KBD-Universal model keyboard. Command Script macro functions are applicable when the keyboard is connected to an Allegiant series matrix switcher.
Requirements	Pentium-class PC with Windows NT, 2000, XP, Vista (32 or 64 bit), or Windows Server 2003; One (1) serial port; IntuiKey firmware v1.94 or later
Availability	Download software from the IntuiKey section at www.boschsecurity.com

Ordering information

KBD-Universal Keyboard
IntuiKey Universal Keyboard for use with Allegiant, Divar, System4 Multiplexers, Bosch VMS, and VIDOS
Order number **KBD-UNIVERSAL**

KBD-Digital Keyboard
IntuiKey Digital Keyboard for use with Divar Digital Video Recorders, System4 Multiplexers, Bosch VMS, and VIDOS
Order number **KBD-DIGITAL**

Accessories

KBD-120PS Power Supply Unit
120 VAC/12 VDC, 600 mA, 50/60 Hz power supply and power cable
Order number **KBD-120PS**

KBD-220PS Power Supply Unit
220-240 VAC/12 VDC, 600 mA, 50/60 Hz power supply and cable
Order number **KBD-220PS**

LTC 8557/50 Keyboard Extension Kit
Hook-up kit for remote keyboard, up to 1.5 km (5000 ft), includes power supply for 230 VAC, 50 Hz
Order number **LTC 8557/50**

LTC 8557/60 Keyboard Extension Kit
Hook-up-kit for remote keyboard, up to 1.5 km (5000 ft), includes power supply for 120 VAC, 60 Hz
Order number **LTC 8557/60**

LTC 8558/00 Keyboard Cable
length 30 m (100 ft)
Order number **LTC 8558/00**

KBD-RACK
Rack mount kit for KBD-Universal and KBD-Digital, 48 cm (19 in.) EIA standard rack unit; W x H: 428 x 220 mm (19 x 8.75 in.); 1 kg (2 lb)
Order number **KBD-RACK**

Represented by:

Americas:
Bosch Security Systems, Inc.
130 Perinton Parkway
Fairport, New York, 14450, USA
Phone: +1 800 289 0096
Fax: +1 585 223 9180
security.sales@us.bosch.com
www.boschsecurity.us

Europe, Middle East, Africa:
Bosch Security Systems B.V.
P.O. Box 80002
5617 BA Eindhoven, The Netherlands
Phone: + 31 40 2577 284
Fax: +31 40 2577 330
emea.securitysystems@bosch.com
www.boschsecurity.com

Asia-Pacific:
Robert Bosch (SEA) Pte Ltd, Security Systems
11 Bishan Street 21
Singapore 573943
Phone: +65 6571 2808
Fax: +65 6571 2699
apr.securitysystems@bosch.com
www.boschsecurity.asia

China:
Bosch (Shanghai) Security Systems Ltd.
201 Building, No. 333 Fuquan Road North IBP
Changning District, Shanghai
200335 China
Phone +86 21 22181111
Fax: +86 21 22182398
www.boschsecurity.com.cn

America Latina:
Robert Bosch Ltda Security Systems Division
Via Anhanguera, Km 98
CEP 13065-900
Campinas, Sao Paulo, Brazil
Phone: +55 19 2103 2860
Fax: +55 19 2103 2862
latam.boschsecurity@bosch.com
www.boschsecurity.com

234267073I | en, V1, 04 Oct 2013

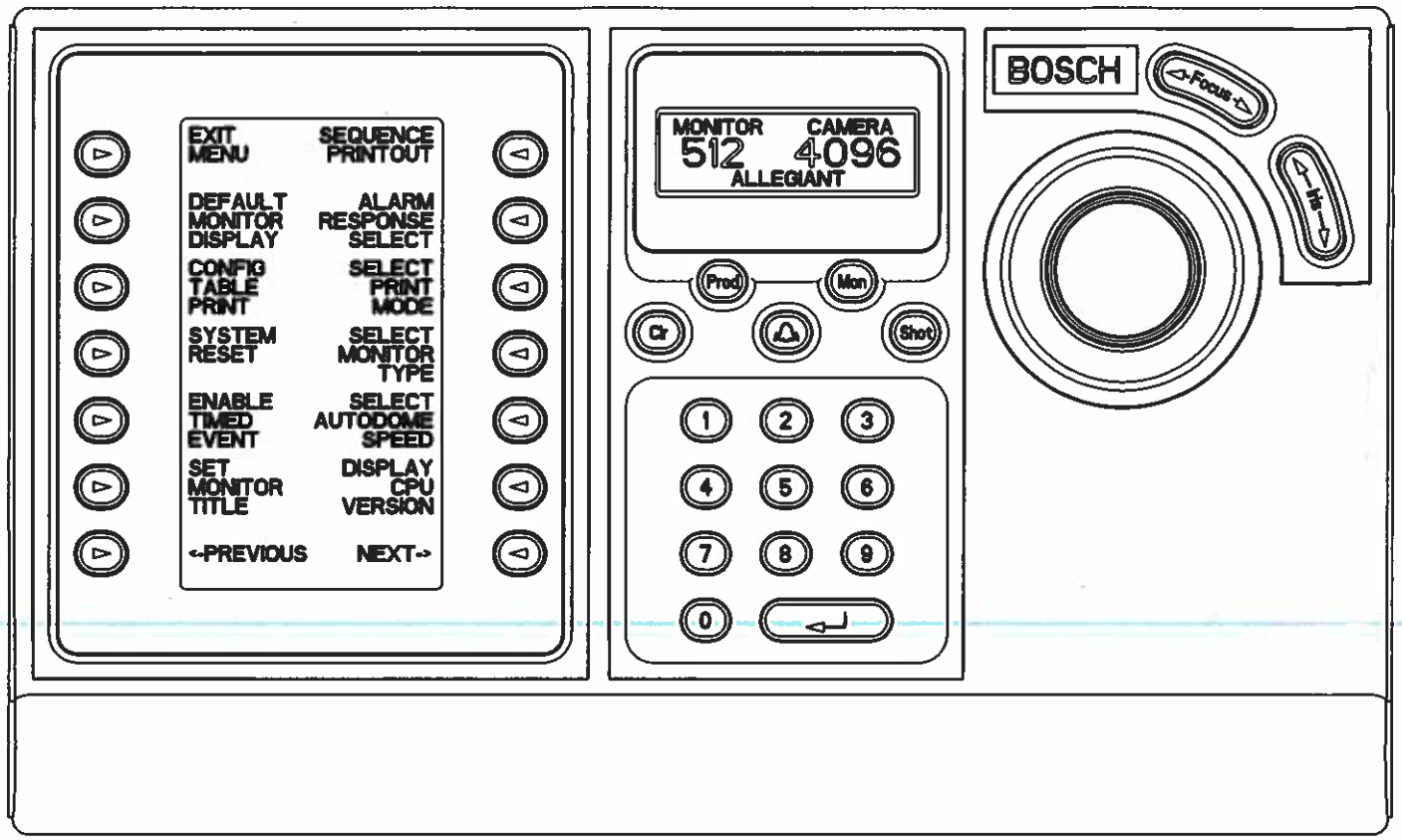

KBD-Universal & KBD-Digital Keyboards

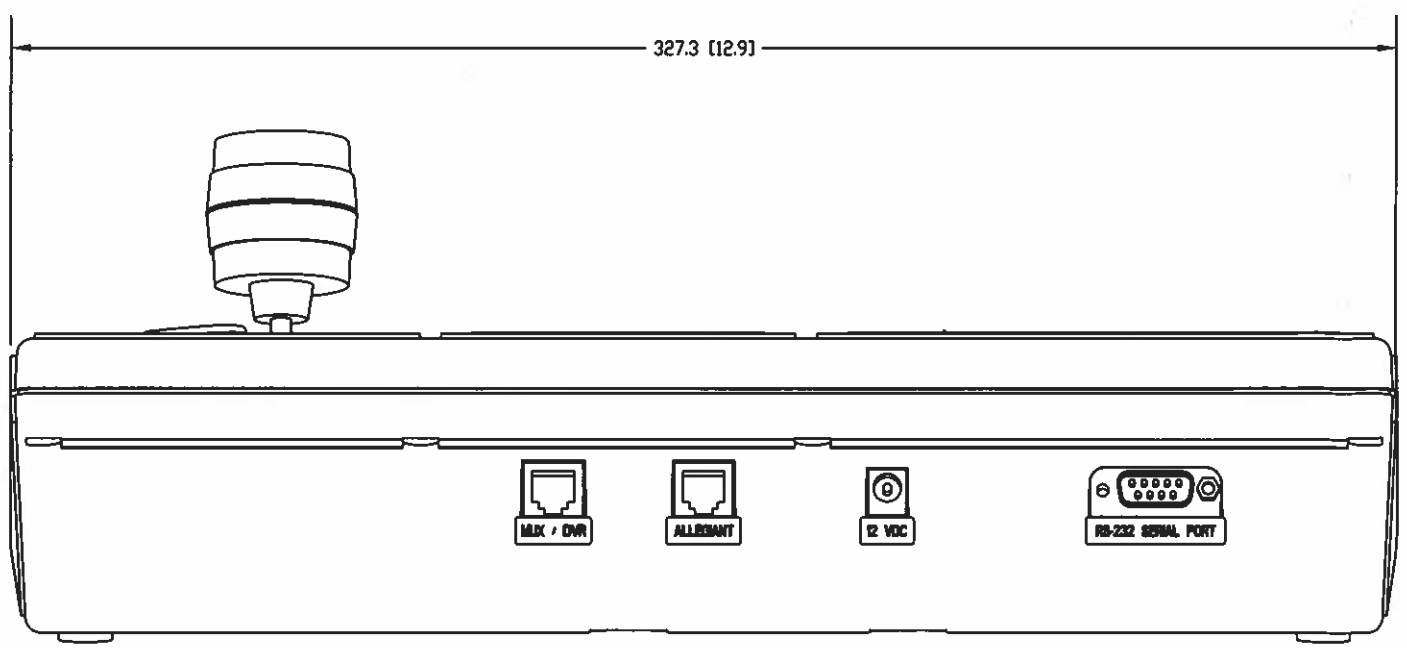

KBD-UNIVERSAL & KBD-Digital Keyboard
Rear View

Tripp Lite
1111 W. 35th Street
Chicago, IL 60609 USA
Telephone: 773.869.1234
www.tripplite.com

SmartRack 18U UPS-Depth Wall-Mount Rack Enclosure Cabinet with Clear Acrylic Window, Hinged Back

MODEL NUMBER: **SRW18USDPG**

Wall-mount cabinet secures and organizes 18U of 19-inch rack equipment up to 24.5 inches deep in locations with limited floor space. Clear acrylic window allows you to monitor equipment without unlocking door.

Description

The SRW18USDPG SmartRack 18U UPS-Depth Wall-Mount Rack Enclosure Cabinet is designed to house EIA-standard 19-inch rack equipment in network wiring closets, retail locations, classrooms, back offices and other areas with limited floor space where you need equipment to be secure, organized and out of the way. Constructed from heavy-duty steel with a durable black powder-coated finish, the cabinet has a maximum load capacity of 250 pounds.

The front door features a shatter-resistant clear acrylic window that lets you monitor equipment readouts without unlocking the enclosure. Not only does the window help prevent equipment tampering and reduce acoustic noise, but it also adds visual flair to your IT installation.

The cabinet swings away from the wall on a sturdy hinge, allowing easy back-door access to equipment and cabling during installation and maintenance. The doors and side panels lock securely to help prevent damage, tampering or theft. The top, bottom and removable side panels are vented, which allows air to flow freely and keep equipment cool. The reversible doors can open left or right by rotating the cabinet 180° before mounting. Convenient top and bottom ports allow easy cable routing.

The SRW18USDPG comes fully assembled and ready to mount to the wall, or use Tripp Lite's optional SRCASTER rolling caster kit to make it a mobile rack. Square and 12-24 threaded mounting holes and numbered rack spaces make equipment installation easy. The vertical mounting rails adjust in 7/8-inch increments to accommodate equipment up to 24.5 inches deep, such as network switches, UPS systems and related battery packs and cabling.

Highlights

- Maximum load capacity of 250 lb.
- Swings away from wall on hinge for easy back-door access
- Front door includes shatter-resistant clear acrylic window
- Locking steel cabinet vented at sides, top and bottom
- Secures 18U of 19 in. rack equipment up to 24.5 in. deep

Package Includes

- SRW18USDPG SmartRack 18U UPS-Depth Wall-Mount Rack Enclosure Cabinet
- (42) M6 screws
- (42) M6 cage nuts
- (42) M6 washers
- (42) 12-24 screws
- (2) Keys
- Owner's manual

Tripp Lite
1111 W. 35th Street
Chicago, IL 60609 USA
Telephone: 773.869.1234
www.tripplite.com

Features

Saves Valuable Workspace

- Perfect for network wiring closets, retail locations, classrooms, back offices and other areas with limited floor space where you need equipment to be secure, organized and out of the way
- Houses EIA-standard 19 in. rack equipment in 18U of space
- Maximum load capacity of 250 lb.

Hinged Cabinet for Convenient Access

- Swings away from the wall to allow easy back-door access to equipment and cabling during installation and maintenance
- Rotate cabinet 180° before mounting to open reversible doors left or right

Shatter-Resistant Clear Acrylic Front Window

- Lets you monitor equipment without unlocking the enclosure
- Prevents equipment tampering
- Reduces acoustic noise
- Provides extra visual flair

Keeps Important Equipment Secure

- Side panels and doors lock securely to help prevent damage, tampering or theft
- Vented panels allow generous airflow that keeps equipment cool
- Convenient ports with removable covers allow cable routing through top and bottom

Easy Enclosure and Equipment Installation

- Ships fully assembled for quick installation
- Mounts to wall or rolls on floor with Tripp Lite's optional SRCASTER caster kit
- Wall-mounting holes spaced 16 in. apart for standard wall stud placement
- Vertical mounting rails adjust in 7/8 in. increments to accommodate equipment up to 24.5 in. deep, such as network switches, UPS systems, battery packs and cabling
- Rails support square-hole or 12-24 threaded-hole mounting
- Rack spaces numbered for easy reference

Meets Payment Card Industry Standards

- Provides physical equipment and media security required for PCI DSS (Payment Card Industry Data Security Standard) compliance

Specifications

OVERVIEW	
UPC Code	037332189738

Tripp Lite
1111 W. 35th Street
Chicago, IL 60609 USA
Telephone: 773.869.1234
www.tripplite.com

320

Rack Type	Enclosure
PHYSICAL	
Color	Black
Factory Preset Rack Depth (cm)	26.5
Factory Preset Rack Depth (in.)	10.42
Factory Preset Rack Depth (mm)	265
Maximum Device Depth (cm)	62.23
Maximum Device Depth (in.)	24.5
Maximum Device Depth (mm)	622
Minimum Device Depth (cm)	7.62
Minimum Device Depth (in.)	3
Minimum Device Depth (mm)	76
Rack Height	18U
Shipping Dimensions (hwd / cm)	104.01 x 70.99 x 76.00
Shipping Dimensions (hwd / in.)	40.95 x 27.95 x 29.92
Shipping Weight (kg)	59.87
Shipping Weight (lbs.)	132.00
Unit Dimensions (hwd / cm)	90.45 x 59.69 x 65.99
Unit Dimensions (hwd / in.)	35.61 x 23.50 x 25.98
Unit Weight (kg)	45.18
Unit Weight (lbs.)	99.6
Weight Capacity - Stationary (kg)	113
Weight Capacity - Stationary (lbs.)	250
Rack Depth	Shallow
SPECIAL FEATURES	
Grounding Lug	Front and Back door frames
STANDARDS & COMPLIANCE	
Approvals	EIA-310-D, IEC 60297-3-100, IP20 Protection, RoHS
WARRANTY	
Product Warranty Period (Worldwide)	5-year limited warranty

MODELS:

SRW18USDP / SRW18USDPG

SmartRack® Wall-Mount UPS-Depth Rack Enclosure Cabinet

18 Rack Units | 250 lb. Load Rating | Sturdy Steel Construction | Locking Doors & Side Panels | Clear Acrylic Front Window (SRW18USDPG only) | Hinged Wall Bracket | Standard 19" Rack Width | Convenient Cable Access | Adjustable Mounting Rails | Ventilated for Ample Airflow | Reversible Cabinet | Square/ Threaded Hole Mounting

- A Front Door (Lockable/Removable/Reversible. SRW18USDP door is perforated; SRW18USDPG door has a clear acrylic window.)
- B Adjustable Mounting Rails (4) (Support square and threaded hole mounting options.)
- C Side Panels (2) (Lockable/Removable)
- D Cable Access Port Covers (4) (Removable)
- E Ventilation Fan Ports (4) (Support optional SRFANWM fan kit.)
- F Hinged Wall Bracket
- G Keys (2)

Also Includes: Owner's manual, cabinet ground screw, pre-installed front door ground wire and rack-mount equipment mounting hardware (42 cage nuts, 42 M6 mounting screws, 42 #12-24 x 5/8" mounting screws, 42 nylon cup washers).

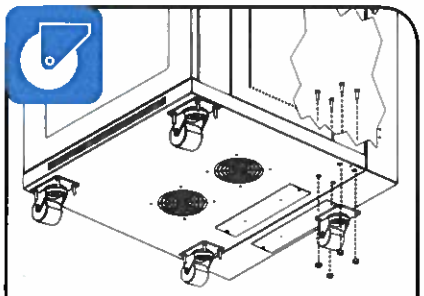

Floor-Standing Installation: Optional SRCASTER kit adapts cabinet to roll under desks, tables or counters. (Kit includes 4 casters.)

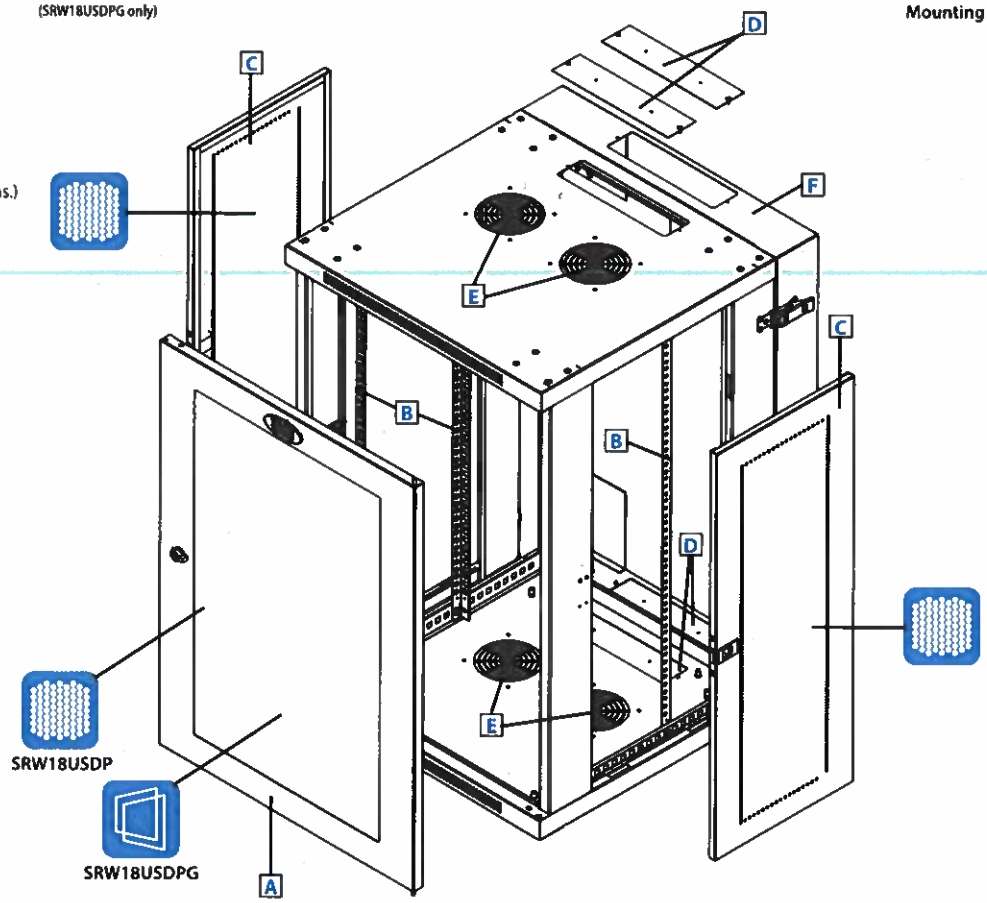

- UPS-depth wall-mount enclosures provide convenient, locking storage for rack-mount IT devices and other equipment that should be off the floor, out of the way and secure
- The cabinet is fully reversible, allowing installers to change door hinges from left to right by simply rotating the unit 180 degrees before mounting
- Hinged wall bracket allows cabinet to swing away from the wall for convenient access to equipment and cabling

SEE NEXT PAGE FOR DETAILED UNIT MEASUREMENTS

Specifications

Model	SRW18USDP / SRW18USDPG
Rack Spaces	18U
Equipment Mounting Depth	Up to 24.5 in. / 622 mm
Load Rating*	250 lb. / 113 kg
Unit Dimensions (H x W x D)	35.61 x 23.5 x 25.98 in. / 905 x 597 x 660 mm
Shipping Dimension (H x W x D)	40.95 x 26.77 x 27.56 in. / 1040 x 680 x 700 mm
Unit Weight	100.9 lb. / 46 kg (SRW18USDP) 99.6 lb. / 45 kg (SRW18USDPG)
Standards	Tested to UL/CSA 60950-1, IEC 60297-3-100, RoHS, NOM (Mexico), EIA/ECA-310-E, GOST; PCI Compliant, IP20 Protection Rating

* The load rating includes the combined weight of the unit and installed equipment. The unit must be mounted to a stable surface with user-supplied anchors capable of bearing the full load.

TRIPP·LITE
1111 W. 35th Street
Chicago, IL 60609 USA
773.869.1234
www.tripplite.com

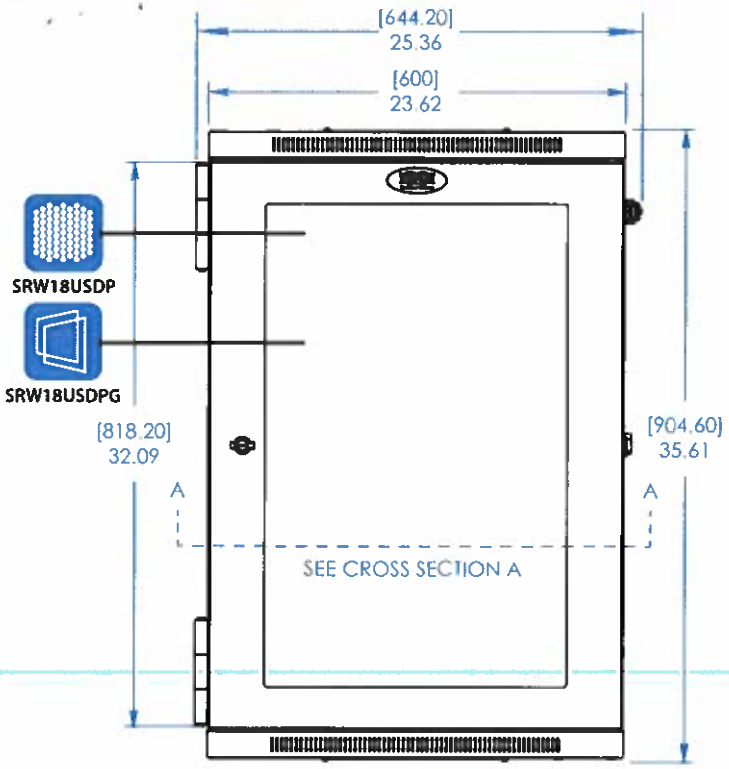

FRONT VIEW

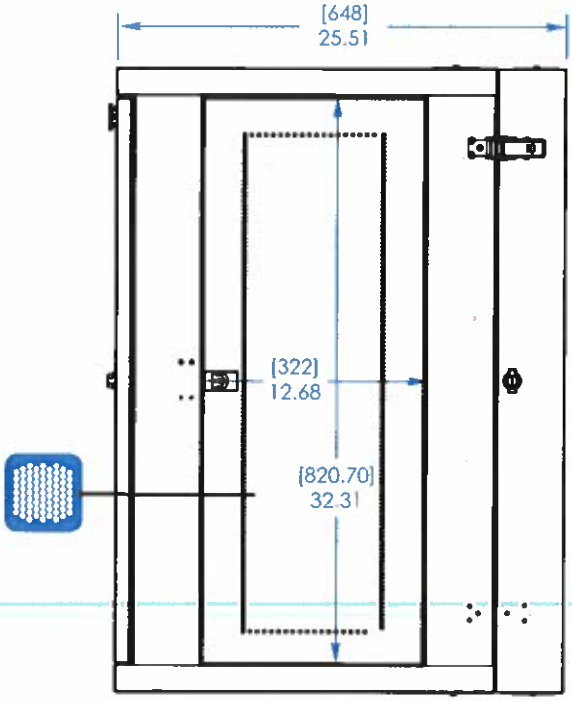

SIDE VIEW

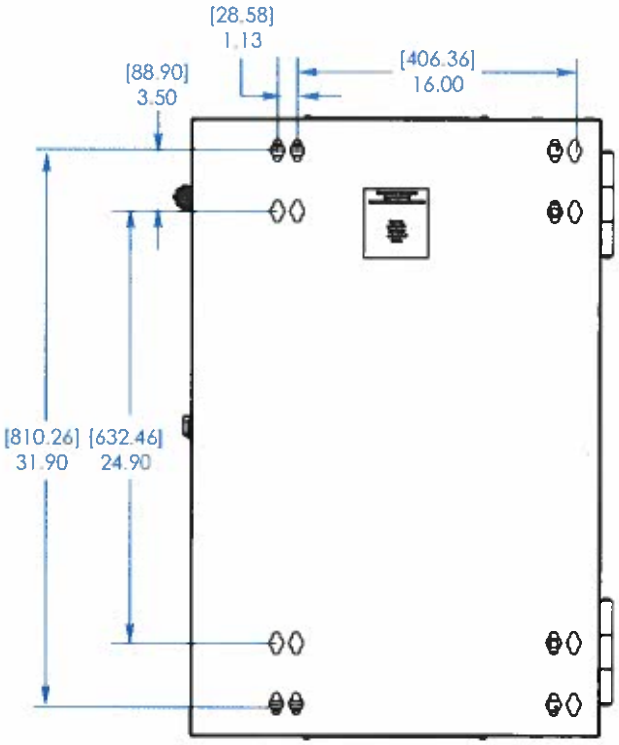

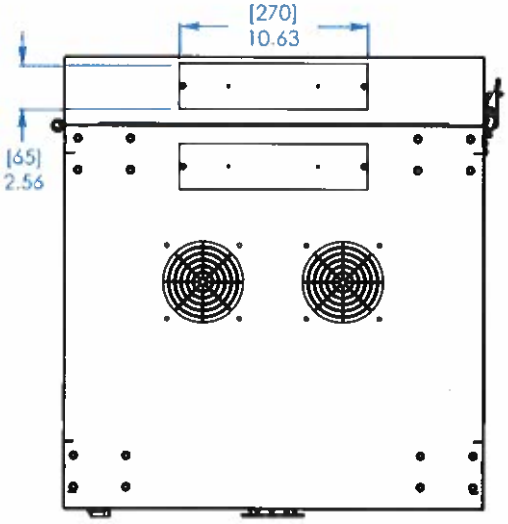

TOP/BOTTOM VIEW

MODELS:

SRW18USDP / SRW18USDPG

TRIPP·LITE

Dimensions: [mm] INCHES

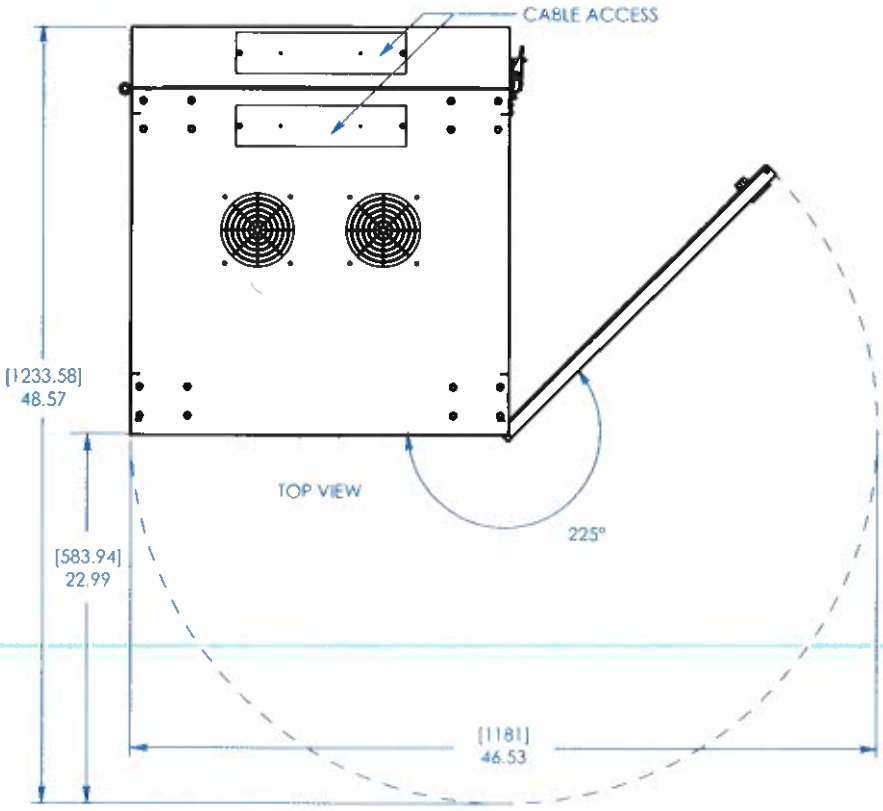

FRONT OPENING

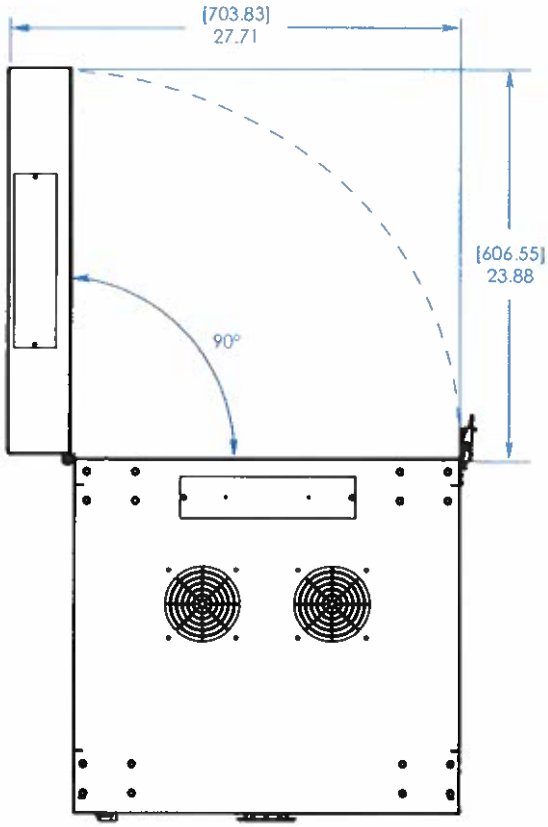

REAR OPENING

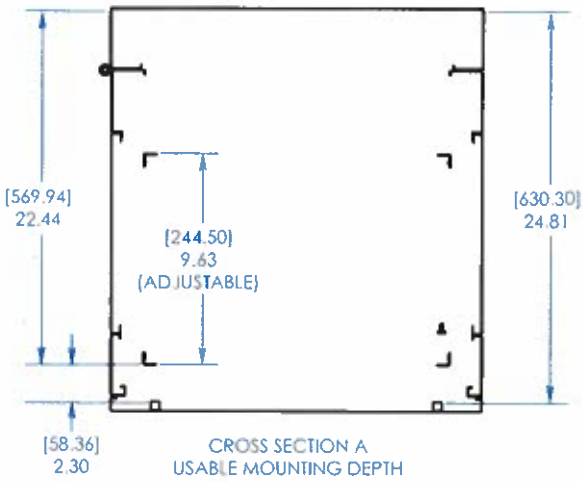

MODELS:

SRW18USDP / SRW18USDPG

TRIPP·LITE

1111 W. 35th Street
Chicago, IL 60609 USA
773.869.1234
www.tripplite.com

Dimensions: [mm] INCHES

Tripp Lite
1111 W. 35th Street
Chicago, IL 60609 USA
Telephone: 773.869.1234
www.tripplite.com

Isobar 12-Outlet Network Server Surge Protector, 15 ft. Cord with 5-20P Plug, 3840 Joules, Diagnostic LEDs, 1U Rack-Mount

MODEL NUMBER: **IBAR12-20ULTRA**

Rack-mount protection for A/V components, network hardware, retail displays, appliances, power tools and other expensive electronics against dangerous surges, spikes and line noise in IT and industrial environments.

Highlights

- 2 NEMA 5-15R & 10 NEMA 5-20R outlets in isolated filter banks
- Network-grade 3840-joule surge protection rating
- Mounts into 1U of space in EIA-standard 19 in. racks
- 20A resettable circuit breaker prevents dangerous overloads
- 15 ft. AC power cord with NEMA 5-20P plug

Package Includes

- IBAR12-20ULTRA Isobar 12-Outlet Surge Protector, 1U Rack-Mount
- Rack-mounting brackets
- Owner's manual

Description

Premium protection for essential network workstations, telecom systems, point-of-sale equipment and audio/video systems, the IBAR12-20ULTRA Isobar® 12-Outlet Surge Protector features a network-grade surge protection rating of 3840 joules to defend your sensitive electronics against even the strongest surges and spikes. In fact, Tripp Lite will repair or replace any connected equipment damaged by surges, including direct lightning strikes, up to $25,000 for life (valid in the U.S., Canada and Puerto Rico only).

The IBAR12-20ULTRA features 12 total outlets—two front NEMA 5-15R and 10 rear NEMA 5-20R—which are arranged in two exclusive isolated filter banks that prevent equipment connected to one bank from interfering with equipment connected to the other. These internal barriers also prevent disruptive line noise from causing A/V distortion, computer lock-ups, data errors and similar problems. Large toroidal chokes, ferrite rod-core inductors, HF/VHF capacitors and multiple layers of metal oxide varistors remove EMI/RFI interference and prevent system crashes, reboots and performance problems.

Because residential power outlets have three wires—hot line (H), neutral (N) and ground (G)—the IBAR12-20ULTRA protects all three, covering two protection modes: full normal mode (H-N) and common mode (N-G/H-G).

An integrated 20A circuit breaker protects all outlets and shuts down connected equipment in the event of an overload. A lighted on/off switch with locking cover provides one-touch control over connected components. Diagnostic LEDs show power, protection and line fault status at a glance. The IBAR12-20ULTRA mounts to a wall, under a counter or in 1U of rack space using the included hardware.

Tripp Lite
1111 W. 35th Street
Chicago, IL 60609 USA
Telephone: 773.869.1234
www.tripplite.com

Features

Network-Grade 3840-Joule Surge Protection for IT or Industrial Electronics Protects rack-mounted network hardware, retail displays, appliances, power tools and other expensive electronics against even the strongest surges and spikesRecommended for network workstations, telecom systems, point-of-sale equipment and audio/video systems requiring AC line protectionFull normal mode (H-N) and common mode (N-G/H-G) line surge suppressionFilters out disruptive EMI/RFI line noise that can cause equipment damage or data lossExceeds IEEE 587 Category A and B surge suppression specifications
12 Outlets Accept Wide Range of Electronic Devices2 NEMA 5-15R in front, 10 NEMA 5-20R in rearAC outlets accept most computer, networking and telecom equipment
Isolated Filter Banks Provide Extra Protection Outlets arranged in 2 exclusive isolated filter banks to limit noise interaction among connected equipmentBlock disruptive EMI/RFI line noise that can cause equipment damage or data loss
Premium Safety Features Lighted on/off switch with locking cover provides one-touch control over connected equipmentAutomatic shutoff permanently cuts power to outlets if protection circuit is incapacitated, preventing equipment damage and indicating replacement is requiredDiagnostic LEDs confirm power, protection and line fault status at a glanceConforms to current UL 1449 3rd Edition safety standards
Flexible Mounting Options Mounts into 1U of space in EIA-standard 19 in. racksIncluded mounting hardware also allows installation on wall or under counterLong 15 ft. AC power cord with NEMA 5-20P plug reaches distant outletsAll-metal housing designed for long life
Backed by Tripp Lite's Ultimate Lifetime Insurance$25,000 Ultimate Lifetime Insurance covers any connected components damaged by power surge (U.S., Canada and Puerto Rico only)

Specifications

OVERVIEW	
UPC Code	037332099235
INPUT	
Nominal Input Voltage(s) Supported	120V AC
Recommended Electrical Service	120V (110-125V)
Voltage Compatibility (VAC)	120
Maximum Surge Amps	150000
Input Plug Type	NEMA 5-20P
Input Cord Length (ft.)	15
Right-Angle Plug	No
Input Cord Length (m)	4.57
Integrated Cord Clip	No
OUTPUT	
Frequency Compatibility	50 / 60 Hz
Output (Watts)	2400
Output Receptacles	(12) 5-15R
Circuit Breaker (amps)	20
Right-Angle Outlets	No

Tripp Lite
1111 W. 35th Street
Chicago, IL 60609 USA
Telephone: 773.869.1234
www.tripplite.com

USER INTERFACE, ALERTS & CONTROLS	
Diagnostic LED(s)	Yes
Switches	Red illuminated power switch controls power to all outlets
Diagnostic LED Details	PROTECTION PRESENT (green), LINE FAULT (red) and LINE OK (green)
Locking Switch Cover	Transparent locking switch cover prevents accidental shutoff
SURGE / NOISE SUPPRESSION	
AC Suppression Joule Rating	3840
AC Suppression Response Time	NM = 0 ns, CM = <1 ns
Protection Modes	Includes full normal mode (H-N) and common mode (N-G / H-G) line surge suppression
Clamping Voltage (RMS)	140
AC Suppression Surge Current Rating	96,000 amps
AC Suppression Components Used	Metal oxide varistors, toroidal balanced chokes and VHF capacitors
Safe Thermal Fusing	Prevents unsafe conditions during extreme extended overvoltages and catastrophic occurences
UL1449 Let Through Rating	330V
EMI / RFI Filtering	40-80 dB
Isolated Filter Banks	2
Immunity	Conforms to IEE 587 / ANSI C62.41
Automatic Shut-Off	No
DATALINE SURGE SUPPRESSION	
Telephone/DSL Protection	No
Cable (Coax) Protection	No
Network (Ethernet) Protection	No
PHYSICAL	
Anti-Microbial Protective Coating	No
Color	Black
Color (AC Line Cord)	Black
Form Factors Supported	1U rackmount, 0U vertical rackmount, wallmount and under-counter mounting supported - detachable flanges can be re-configured to support a variety of additional mounting options
Housing Color	Black
Included Mounting Accessories	Included mounting flanges are pre-installed for 1U rackmount installation and can be re-configured to support a variety of mounting options
Integrated Keyhole Mounting Slots	Yes (Includes flanges)
Material of Construction	Metal

Tripp Lite
1111 W. 35th Street
Chicago, IL 60609 USA
Telephone: 773.869.1234
www.tripplite.com

Outlets Measurement (Center to Center)	Distance between front outlets = 38.9mm; Distance between rear outlets = 40.65mm
Receptacle Color	Black
Shipping Dimensions (hwd / cm)	23.37 x 6.60 x 51.56
Shipping Dimensions (hwd / in.)	9.20 x 2.60 x 20.30
Shipping Weight (kg)	2.99
Shipping Weight (lbs.)	6.60
Unit Dimensions (hwd / cm)	4.45 x 44.45 x 10.16
Unit Dimensions (hwd / in.)	1.75 x 17.5 x 4
Unit Weight (kg)	2.86
Unit Weight (lbs.)	6.3
SPECIAL FEATURES	
Rotatable Outlets	No
STANDARDS & COMPLIANCE	
Canada	Approved for Canada by ETL
Approvals	Exceeds IEEE 587 category A&B specifications
UL1449 3rd Edition (AC Suppression)	Tested to UL1449 3rd Edition by ETL
WARRANTY	
Product Warranty Period (Worldwide)	Lifetime limited warranty
Connected Equipment Insurance (U.S., Canada & Puerto Rico)	$25,000 Ultimate Lifetime Insurance

Tripp Lite
1111 W. 35th Street
Chicago, IL 60609 USA
Telephone: 773.869.1234
www.tripplite.com

328

24-Port 1U Rack-Mount Cat6/Cat5 110 Patch Panel, 568B, RJ45 Ethernet, TAA

MODEL NUMBER: **N252-024**

Highlights

- 19-in. rackmount ready, 1U height (1.75")
- EIA/TIA 2/32 spacing
- 110 type punchdown termination
- Compliant with the Federal Trade Agreements Act (TAA) for GSA Schedule purchases

Package Includes

- Cat6 Patch Panel 568B- 24 Port, 1U

Description

Tripp Lite's Category 6 Patch Panels offer you all the functionality and compatibility as any name brand. Each panel comes with 110-type termination, while meeting and exceeding EIA/TIA TSB-40 Cat6 connecting hardware specifications. Color coded for both EIA/TIA 568A & 568B installations. 24 ports ensure a wide range of plug-n-play options. The clear numbering on both the front and back of each panel gives you a quick and easy way to identify cable runs and the high density 19in panel design will save you valuable space in on the rack.

UTP Cat6 22-24 AWG solid cable

Features

- Cat6
- UL approved
- Ports clearly numbered both on front and back
- Labels on front enable each port to be named
- Color coded label on back offers both EIA/TIA 568A & 568B wiring
- Metal frame
- EIA/TIA 2/32 spacing
- Rack mountable on a 19 rack (1U of space)

Specifications

OVERVIEW	
UPC Code	037332120038
PHYSICAL	

Tripp Lite
1111 W. 35th Street
Chicago, IL 60609 USA
Telephone: 773.869.1234
www.tripplite.com

Color	Black
Shipping Dimensions (hwd / cm)	5.59 x 52.07 x 10.80
Shipping Dimensions (hwd / in.)	2.20 x 20.50 x 4.25
Shipping Weight (kg)	0.59
Shipping Weight (lbs.)	1.30
CONNECTIONS	
Ports	24
Side A - Connector 1	110 IDC
Side B - Connector 1	RJ45 (FEMALE)
PoE Type	Type 2 PoE+ (30W, IEEE 802.3at)
FEATURES & SPECIFICATIONS	
Technology	Cat5/5e; Cat6
WARRANTY	
Product Warranty Period (Worldwide)	Lifetime limited warranty

DIN-Rail RJ45/Ethernet cable SPD

The Bussmann series DIN-Rail mount BSPD48RJ45 Surge Protective Device (SPD) is a UL Listed 497B universal DIN-Rail mount surge protective device for RJ45/Ethernet cable systems. It is easy to install or retrofit Ethernet cable systems with RJ connectors.

The BSPD48RJ45 is installed between the patch panel and the active component (a switch for example). The snap-in mechanism of the supporting foot allows the SPD to be safely grounded via the DIN-Rail. For single applications, the BSPD48RJ45 comes with a supplied mounting bracket with cable lug.

Fulfilling the requirements of Category 6, the BSPD48RJ45 can be universally used for all data services up to nominal voltages of 48 V. It is well suited for existing services such as Gigabit Ethernet, ATM, ISDN, Voice over IP and Power over Ethernet (PoE+ acc. to IEEE 802.3at up to 57 V) and similar applications in structured cabling systems according to Class E up to 250 MHz. Protection of all pairs by means of powerful gas discharge tubes and one adapter filter matrix per pair.

- UL 497B Listed
- Easy to install or retrofit for protection of all lines
- CAT 6 according to ISO/IEC 11801
- CAT 6 in the channel (Class E)
- Power-over-Ethernet (PoE+ according to IEEE 802.3at)

DIN-Rail RJ45 SPD applications

BSPD48RJ45 applications
Bus systems, and measuring and control technology
Industrial Ethernet
Data networks
ATM
Ethernet 10/100/1000
FDDI, CDDI
Industrial Ethernet
Power over Ethernet (PoE)
Token Ring
VG any LAN
Video systems
Video (2 wire)

Dimensions — mm

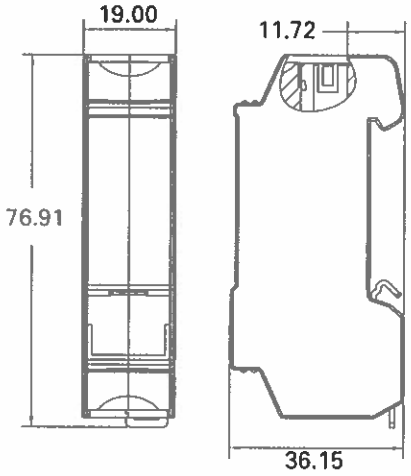

Catalog numbers and specifications

Specification	BSPD48RJ45
Nominal voltage (U_n)	48 V
Max. continuous operating DC voltage (U_c)	48 V
Max. continuous operating AC voltage (U_c)	34 V
Max. continuous DC voltage pair-pair (PoE) (U_c)	57 V
Nominal current (I_L)	1 A
C2 Nominal discharge current (8/20 µs) line-line (I_n)	150 A
C2 Nominal discharge current (8/20 µs) line-PG (I_n)	2.5 kA
C2 Total nominal discharge current (8/20 µs) line-PG (I_n)	10 kA
C2 Nominal discharge current (8/20 µs) pair-pair (PoE) (I_n)	150 A
Voltage protection level line-line for In C2 (U_p)	≤190 V
Voltage protection level line-PG for In C2 (U_p)	≤600 V
Voltage protection level line-line for In C2 (PoE) (U_p)	≤600 V
Voltage protection level line-line at 1 kV/ µs C3 (U_p)	≤180 V
Voltage protection level line-PG at 1 kV/ µs C3 (U_p)	≤500 V
Voltage protection level pair-pair at 1 kV/ µs C3 (PoE) (U_p)	≤600 V
Insertion loss at 250 MHz	≤3 dB
Capacitance line-line (C)	≤30pF
Capacitance line-PG (C)	≤25pF
Operating temperature range	-40°C to +80°C
Degree of protection	IP10
Mounting	35 mm DIN-Rail per EN 60715
Connection (input / output)	RJ45 socket / RJ45 socket
Pinning	1 / 2, 3 / 6, 4 / 5, 7 / 8
Grounding	Via 35 mm DIN-Rail per EN 60715
Enclosure material	Die cast zinc
Color	Bare surface
Test standards	IEC 61643-21 / EN 61643-21
Agency information	UL 497B
Warranty	Five years*

* See Limited Warranty Statement 3A1502 for details at Eaton.com/bussmannseries.

CAT6 550MHz Outdoor Direct Burial Unshielded Bulk Cable

CAT6

Category 6 Outdoor Direct Burial UTP 23 AWG 4 Pair 8 Solid Bare Copper Conductors, Gel-Filled, LDPE Jacket 1000FT. Our bulk cable is marked in descending order so you always know how much cable is left.

Applications

- 10/100/1000Base-T
- 100Base-VG
- 155 Mbps and 622-Mpbs ATM
- Other high-performance applications
  - Outside plant
  - Direct Burial
  - Aerial

Compliance

- ISO/IEC 11801
- TIA/EIA-568-C.2 Category 6
- ANSI/ICEA S-90-661 (Category 6)
- NEMA WC63.1 (Category 6)
- RoHS Compliance for the Requirement of European Union Issued Directive 2002/95/EC

Physical Characteristics

- Conductor Size: 23AWG
- Conductor Material: Solid Bare Copper
- Insulation Material: High Density Polyethylene
- Insulation Diameter: 1.12 ± 0.05 mm
- Number of Conductors: 8 Conductors
- Number of Pairs: 4 Pairs
- Outer Shield Material: N/A
- Drain Wire: N/A
- Outer Jacket Material: LDPE (Complies RoHS)
- Outer Jacket Diameter: 7.5mm ± 0.4mm
- Outer Jacket Rip Cord: Yes

Technical Diagram

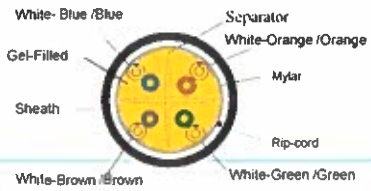

Available Jacket Colors

● Black Item# C6CMXF-2044BK

Cable Features

- Tested up to 550MHz.
- Meets or exceeds CAT6 T568C.2 standards.
- Extra headroom provides room for growth.
- Low attenuation and power-sum crosstalk.

Construction Facts

- The PVC Cable has high density polyethylene insulation.
- Longitudinal rip cord for easy jacket opening.

Cable Put-Ups:

- Cable is supplied in 1000ft increments on a wooden spool.

CAT6 600MHz Solid Bulk Cable Electrical Specifications

Frequency MHz (Maximum)	ATT dB/100 m (328 ft.) (Maximum)	ACR ns/100 m (328 ft.) (Maximum)	Delay dB/100 m (328 ft.) (Minimum)	NEXT dB/100 m (328 ft.) (Minimum)	PS-NEXT dB/100 m (328 ft.) (Minimum)	ELFEXT dB/100 m (328 ft.) (Minimum)	PS-ELFEXT dB/100 m (328 ft.) (Minimum)	Return Loss dB (Minimum)
1	2.03	N/A	570.00	74.3	72.3	67.8	64.8	20.0
4	3.78	N/A	552.00	65.3	63.3	55.8	52.8	23.0
8	5.32	N/A	546.73	60.8	58.8	49.7	46.7	24.5
10	5.95	N/A	545.38	59.3	57.3	47.8	44.8	25.0
16	7.55	N/A	543.00	56.2	54.2	43.7	40.7	25.0
20	8.47	N/A	542.05	54.8	52.8	41.8	38.8	25.0
25	9.51	N/A	541.20	53.3	41.3	39.8	36.8	24.3
31.25	10.67	N/A	540.44	51.9	49.9	37.9	34.9	23.6
62.50	15.38	N/A	538.55	47.7	45.4	31.9	28.9	21.5
100	19.80	N/A	537.60	44.3	42.3	27.8	24.8	20.1
200	28.98	N/A	536.54	39.8	37.8	21.8	18.8	18.0
250	32.85	N/A	536.27	38.3	36.3	19.8	16.8	17.3
350	39.79	N/A	535.92	36.1	34.1	16.9	13.9	16.3
600	54.49	N/A	535.47	32.8	30.6	12.2	9.2	14.7

PrimusCable.com - (951) 824-1571

RoHS

CAT6 550MHz Outdoor Direct Burial Unshielded Bulk Cable

Pair Color Code Chart

Pair 1 ----- White/Blue Stripe & Blue
Pair 2 ----- White/Orange Stripe & Orange
Pair 3 ----- White/Green Stripe & Green
Pair 4 ----- White/Brown Stripe & Brown

Mechanical Characteristics

- Storage Temperature Range: -30~+60
- Installation Temperature Range: -40~+60
- Operating Temperature Range: -40~+60
- Bulk Cable Weight: N/A lbs. / 1000FT
- Max. Recommended Pulling Tension: N/A
- Min. Bend Radius/Minor Axis: 8D
- Min. Bend/Installation: N/A
- Test Object: Jacket
- Test Material: PVC
- Before Tensile Strength: ≥10.0
  - Aging Elongation: ≥350
  - Aging Condition: 100°C x 24hrs x 10Days
- After Tensile Strength: N/A
  - Aging Elongation: ≥300
  - Cold Bend: No Visible Cracks (-40°±2°x4h)

Electrical Characteristics

- Unbalanced-to-ground Capacitance(pf/100m): 330 (Max)
- Nominal Velocity of Propagation: 68%
- Maximum Delay: 537.60 @ 100MHz (ns/100m)
- Maximum Delay Skew: ≤ 45 (ns/100m)
- Maximum Conductor DC Resistance: 9.38 (@ 20°C OHm/100m)
- Maximum Operating Voltage - UL: 300V RMS
- Maximum DCR Unbalanced: 5% (@ 20°C)
- Attenuation (Maximum)
  - 19.8dB/100m (328.1ft.) @ 100MHz
  - 54.49dB/100m (328.1ft.) @ 600MHz
- 1.0 - 100MHz Impedance: 100Ω ± 15%
- NEXT (Minimum)
  - 44.3dB/100m (328.1ft.) @ 100MHz
  - 32.6dB/100m (328.1ft.) @ 600MHz
- PS-NEXT (Minimum)
  - 42.3dB/100m (328.1ft.) @ 100MHz
  - 30.6dB/100m (328.1ft.) @ 600MHz
- Return Loss (Minimum)
  - 20.1dB/100m (328.1ft.) @ 100MHz
  - 14.7dB/100m (328.1ft.) @ 600MHz

Jacket Printing

PRIMUS CABLE CAT6 UTP 4PR 23 AWG 550MHZ DIRECT BURIAL (FLOODED) UV OUTDOOR PE ANSI/TIA/EIA–568-C.2-1 ZONE A B C D E F / Device 1 2 3 4 5 6 7 8 9 1000 FT

Sequential foot markers on jacket.

PrimusCable.com - (951) 824-1571

RoHS

IDM4012SS Mount

WALL MOUNT, STAINLESS STEEL, FOR SPECTRA® SPECIALTY DOMES

Product Features

- For Use with Spectra® Series Specialty Domes
- Can Also Be Used with Other Pendant Domes using 1.5-inch NPT Threaded Pipe for Mounting
- Constructed of Type 304 Stainless Steel
- Mounts Directly to Vertical Load-Bearing Surface for Wall Mount Applications
- Supports up to 75 Pounds (34 kg)
- Includes Cable Feedthrough Hole

The **IDM4012SS** wall mount is designed specifically for the Stainless Steel and Pressurized Spectra® Series Dome Systems (Spectra III™ or newer models). The mount is constructed of type 304 stainless steel with a gray polyester powder coat finish making it ideal for harsh environmental installations.

IDM4012SS can be attached directly to any vertical load-bearing surface and is designed to support up to 75 pounds (34 kg). Conduit accesses are available through the back mounting plate or through the bottom of the mount where a flexible metal conduit fitting can be installed. A gasket is provided for the back mounting plate to protect the interior of the **IDM4012SS**.

The mount is threaded for 1.5-inch NPT pipe, and is compatible with any Spectra®, DF5, or DF8 Series pendant back box.

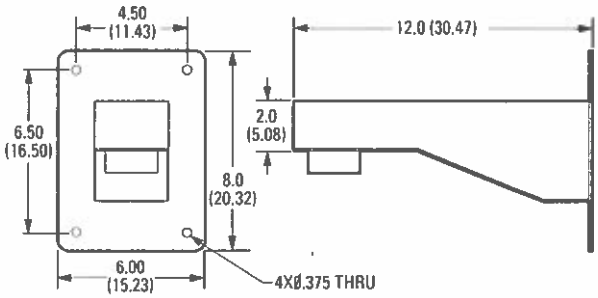

NOTE: VALUES IN PARENTHESES ARE CENTIMETERS, ALL OTHERS ARE INCHES.

MODEL

IDM4012SS	Wall mount with cable feedthrough and conduit access holes for use with Spectra® Stainless Steel and Pressurized dome systems

GENERAL

Construction	Type 304 stainless steel
Finish	Gray polyester powder coating
Environment	Indoor/outdoor
Mounting Method	Secure with four stainless steel 5/16-inch fasteners (not supplied)
Cable Entry	Two holes on mounting plate for conduit access and one hole on the bottom of the mount for conduit access
Maximum Load	75 lb (34 kg)
Unit Weight	4.9 lb (2.22 kg)
Shipping Weight	7.0 lb (3.17 kg

OPTIONAL MOUNT ADAPTERS

CM400	Corner mount adapter
PA402	Pole mount adapter
PP300L/PP301L	Parapet corner adapter
PP400	Parapet wall adapter
PP4348	Rooftop parapet adapter

Pelco, Inc. Worldwide Headquarters:
3500 Pelco Way, Clovis, California 93612-5699 USA
USA & Canada Tel: (800) 289-9100 • FAX: (800) 289-9150
International Tel: +1 (559) 292-1981 • FAX: +1 (559) 348-1120
www.pelco.com

NetWaySP1BTWP
802.3bt Media Converter/Injector with Integral Power

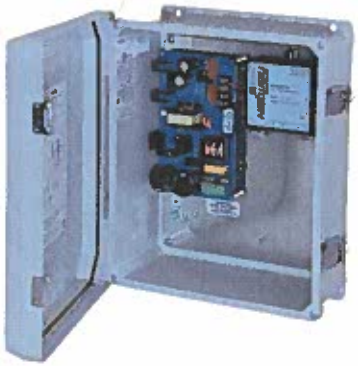

Description

Altronix NetWaySP1BTWP Outdoor 802.3bt media converter/injector provides a single 802.3bt (4PPoE) port up to 90W and accommodates Fiber (1000Base-X/SX/LX) or structured cable to transmit data. Units can be deployed with structured cable, conventional single/multimode fiber or composite cable (fiber + copper combined). Cameras/edge devices may be located up to 100m from the unit.

Key Features

- Single PoE port provides up to 90W for high PoE illuminators, lighting, PTZ cameras, etc.
- Gigabit SFP port.
- 10/100/1000 Mbps data port.
- IEEE 802.3bt (90W), IEEE 802.3at (30W) and IEEE 802.3af (15W) compliant.
- Built-in battery charger
- Lifetime Warranty / Made in the U.S.A.
- NEMA 4/4X, IP66-11 Rated enclosure for outdoor use.

Similar products:

- NetWaySP1BTWPX - Outdoor 802.3bt media converter/injector with integral power in NEMA 4/4X IP66-11 enclosure which accommodates stand-by batteries.
- NetWaySP1BTWPN - Outdoor 802.3bt media converter/injector in compact NEMA 4/4 IP66-11 enclosure *(powered via NetWaySP4P with composite cable application)*
- NetWaySP1BT - 802.3bt Media converter/injector only

Specifications

Input
115VAC, 60 Hz, 2.5A or 230VAC, 50/60 Hz, 1.3A.
Fusing 5A/250V.

Fiber Port
One (1) 1Gb SFP port.

PoE Port
Single port rated up to 90W max.
IEEE 802.3af, 802.3at and 802.3bt compliant

Data Port
Connectivity: RJ45, auto-crossover.
Wire type: 4-pair CAT5e.
Distance: up to 100m.
Speed: 10/100/1000 Mbps.

Back-up Battery (batteries not included, stored separately)
Type: Sealed lead acid or gel type.
Failover: Upon AC loss, instantaneous.

Indicators (LED)
Yellow/Green RJ45 LEDs: Yellow: 10/100; Green: 10/100/1000
Green PoE LED: PoE present.
Green SFP (Fiber) LED: SFP connection.

Features
Auto detection and protection of legacy non-PoE cameras/devices.
Lifetime Warranty. Made in U.S.A.

Agency Listings
CE European Conformity.

Physical and Environmental
Enclosure Dimensions (H x W x D approx.):
13.31" x 11.31" x 5.59" (338.1mm x 287.3mm x 142mm).
NEMA 4/4X, IP66-11 Rated enclosure for outdoor use.

Product Weight / Shipping (approx.)
Product Weight: 10.5 lbs. (4.76 kg).
Shipping Weight: 11.9 lbs. (5.4 kg).
Temperature
Operating: 60W: -40°C to 75°C (-40°F to 167°F).
80W: -40°C to 70°C (-40°F to 158°F).
90W: -40°C to 60°C (-40°F to 140°F).
Storage: -40°C to 85°C (-40°F to 185°F).
Relative Humidity: 85% +/-5%
BTU/Hr. (approx.): 61 BTU/Hr.
Operating Altitude: -304.8 to 2,000m.

NetWaySP1BTWP
802.3bt Media Converter/Injector with Integral Power

Typical Application

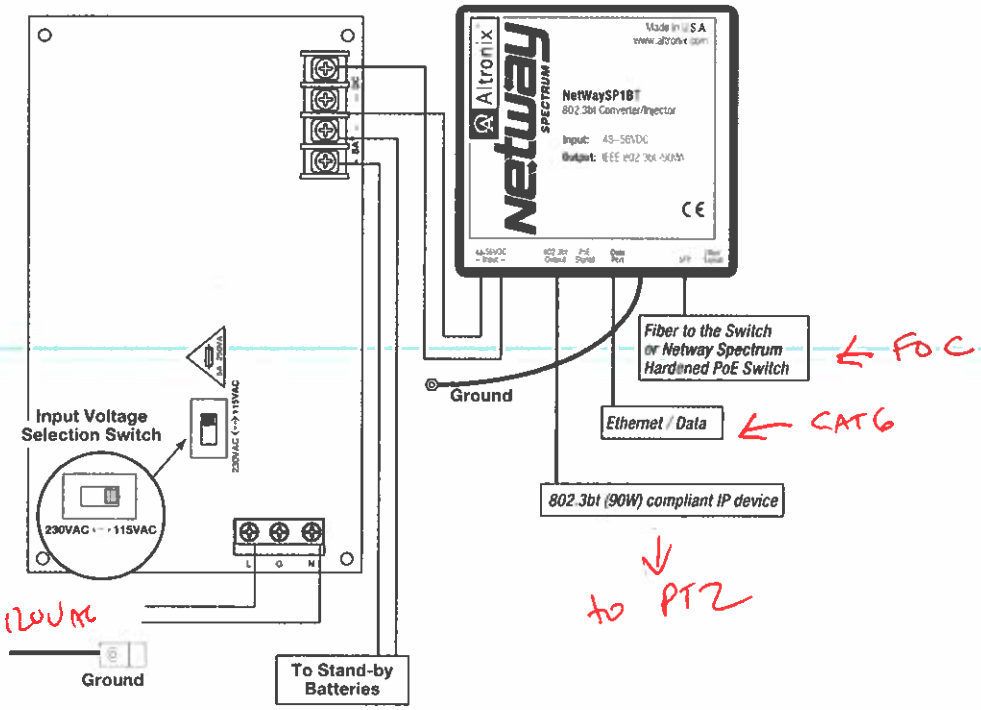

Accessories

PMK1 - Pole Mount Kit
(order separately)
PMK1 pole mount kit is designed to simplify installation of outdoor units.
It accommodates 2"- 8" (diameter) poles.

SFP Modules - Hot pluggable Transceivers

P1MM	Multi-Mode SFP Module for distances up to 550m.
P1SM10	Single-Mode SFP Module for distances up to 10km.
P1AB2K	Single Strand SFP Module for distances up to 2km.
P1GCE	Copper SFP Module for distances up to 100m.

4-port Ethernet over Fiber Media Converter with Integral power for applications utilizing composite or conventional cabling

NetWaySP4P -
Unit passes a maximum power up to 120W per port from a built-in Power Supply/Charger.
Four (4) 1Gb SFP ports.

NetWaySP4P2 -
Unit passes 56VDC power-limited 60W max. per port from a built-in Power Supply/Charger.
Four (4) 1Gb SFP ports.

Datasheet

AXIS T8123-E Outdoor Midspan 30 W 1-port

For outdoor installations

Power over Ethernet (PoE) offers an easy, fast and cost-effective solution for powering network products. A midspan injects power and data to the network device with built-in PoE support. No need to replace existing Ethernet switches and cabling infrastructure. AXIS T8123-E Outdoor Midspan 30 W 1-port delivers 30 W and is IEEE 802.3af compliant, which ensures compatibility with most of Axis network products with built-in PoE. The midspan ensures safe and reliable operation in outdoor environments. Furthermore, it offers surge protection for both the AC and the PoE ports ensuring protection to the equipment from outdoor surges.

- > Outdoor-ready, IP66- and NEMA 4X-rated
- > IEEE 802.3at
- > 100 to 240 V AC
- > Plug-and-play

AXIS Part Number 5030-234

www.axis.com

AXIS T8123-E Outdoor Midspan 30 W 1-port

Midspans	
Function	Data and power are fed to a network video product through an Ethernet cable Built-in surge protection
Data rate	10/100/1000 Mbps
Installation and management	Power Selector: 15 W or 30 W Automatically detects PoE and High PoE-enabled devices and supplies inline power
Data & power	
Power	Power over Ethernet Plus (PoE+) IEEE 802.3at Type 2 Class 4
Input power	AC Input Voltage: 100 to 240 V AC AC Frequency: 50-60 Hz
Max. output power	55 V DC (max. 30 W)
Connectors	Shielded RJ45, EIA 568A and 568B
Network cables	Shielded category 5 (or higher)
Wiring	Data provided over pairs 1/2 and 3/6 for 10/100 Ethernet, over all four pairs for Gigabit Ethernet Power over spare pairs 4/5 (+) and 7/8 (-)

General	
Casing	Polycarbonate IP66- and NEMA 4X-rated
Mounting	Wall or pole[a]
Operating conditions	-40 °C to 55 °C (-40 °F to 131 °F) At 15.4 W: -40 °C to 65 °C (-40 °F to 149 °F) Humidity 10-100% RH (condensing)
Approvals	RoHS, REACH, WEEE, CE, EN 55022 Class B, EN 55024, EN 61000-4-5, FCC Part 15 Subpart B Class B, ICES-003 Class B, VCCI Class B, RCM AS/NZS CISPR 22 Class B, KCC KN22 Class B, KN24, COC, CCC, IEC/EN/UL 60950-1, IEC/EN/UL 60950-22, GS, CB, KC, S-mark, IEC/EN 60529 IP66, NEMA 250 Type 4X, ASTM B-117, GR-1089-CORE, ITU-T
Dimensions	70 x 150 x 214 mm (2.8 x 5.9 x 8.4 in)
Weight	1 kg (2.4 lb)
Optional accessories	Pole Mount Bracket F
Warranty	Axis 3-years warranty, see www.axis.com/warranty

a. *Sold as optional accessory*

Environmental responsibility:
www.axis.com/environmental-responsibility

AXIS COMMUNICATIONS

PROCET®
PoE System

Outdoor 4-port PoE Switch

PT-POS401GR-OT

Product Overview

PT-POS401GR-OT is a 4-port PoE switch with waterproof metal casing. It has sealing gasket inside which passed extension, bearing, corrosion, aging test. 4 ports includ 1 LAN port and 3 PoE output ports with 6KV (10/700us) surge protection, each PoE output port provides 55Vdc, 0.55A power for remote PDs. It supports 10/100/1000-Mbps of data speed.
It is compliant with IEEE802.3at standard and is also compatible to use with any IEEE802.3af standard equipments, such as wireless APs, network camera, VoIP phone, base stations, and other high power Ethernet terminals.

PT-POS401GR-OT is designed for outdoor using. It works with input voltage of 100-240Vac and operates under -40℃ to +65℃. It has detection chip inside, which will detect and classify PD before powering it. It will not provide power until a standard-compliant PD is detected.The effective distance is 100 meters over Cat5e/Cat6 cables.
It is specially suitable for working in complex power situations. It is easy to install with installation kit PT-POT-MBK, no need to open the equipment.

IP66 RoHS

Product Profile

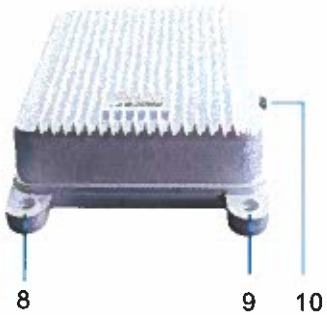

1. Mounting Hole
2. AC Power Input Port
3. Data&Power Output Port
4. Data&Power Output Port
5. Data&Power Output Port
6. LAN: Data Input Port
10.Earth
7,8,9. Mounting Hole

Product Working Diagram

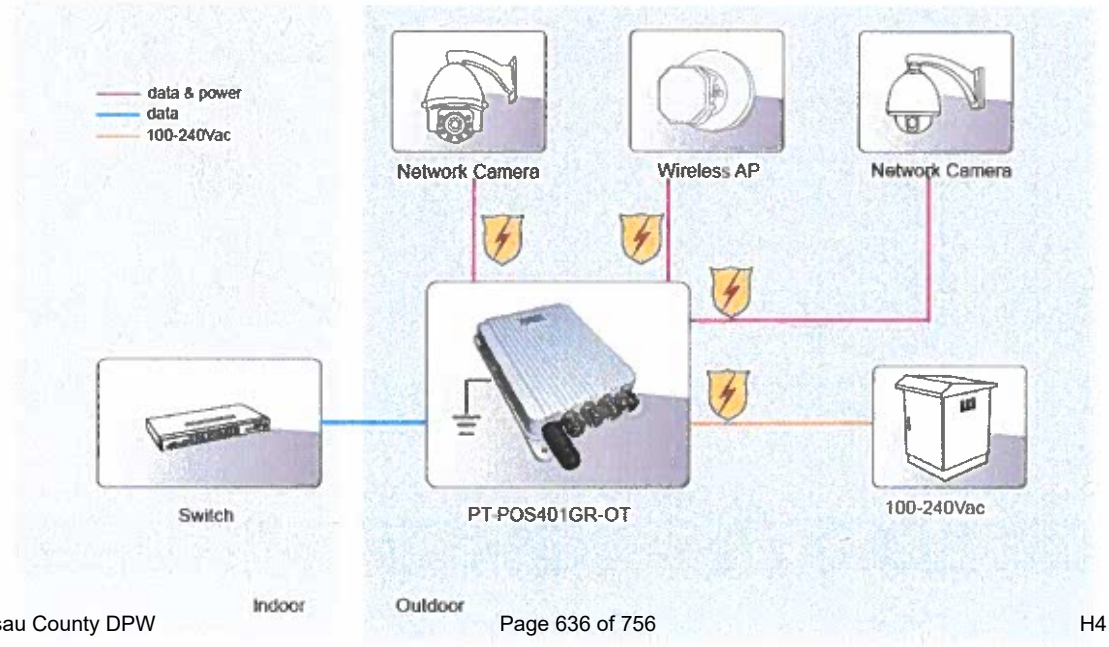

Specification

Standard

- IEEE802.3 10Base-T Ethernet
- IEEE802.3u 100Base-Tx Fast Ethernet
- IEEE802.3ab 1000Base-T Gigabit Ethernet
- Compliant with IEEE802.3af/at
- RoHS Compliance
- WEEE Compliance
- Protection Level: IP66, IEC60529, NEMA 250

Input & Output

- Input :100-240Vac 2A 50Hz ~ 60Hz
- Output: 55Vdc 550mA (Per Port)
- Power Output Pins: 3/6(+), 1/2(-)
- Data Speed: 10/100/1000Mbps

Working Environment

- Operating Temperature: -40 C to 65 C
- Operating Humidity: 20% to 80%, non-condensation
- Storage Temperature: -40 C to 85 C
- Storage Humidity: 10% to 90%, non-condensation
- Operating Altitude: up to 5000meters

AC Surge Protection

- Common mode surge protection(10/700us): 6KV
- Differential mode surge protection (10/700us): 1.5KV

PoE Surge Protection

- Protected line: 1,2,3,4,5,6,7,8
- Common mode surge protection(10/700us): 6KV
- Differential mode surge protection (10/700us): 1.5KV

Mechanical Characteristics

- Case: Metal
- Color: White
- Mounting: Wall-mounted/Pole-mounted
- IP Rated: IP66
- Size: 176mm X 269mm X 65mm
- Weight: 1.8kg

Safety Approvals

- IP66

EMI

- FCC CFR47 Part 15, EN55024, EN55032

EMS

- IEC61000-4-2(ESD) ± 6kV(contact), ±8kV(air)
- IEC61000-4-3(RS) 10V/m(80MHz~2GHz)
- IEC61000-4-4(EFT) Power Port: ±2kV; Data Port:±1kV
- IEC61000-4-5(Surge) Power Port:±1kV/DM, ±2kV/CM
- IEC61000-4-6(CS) 10V(150kHz~80MHz)

Immunity

- IEC60068-2-6(Vibration)
- IEC60068-2-27(Impact)
- IEC60068-2-32(Free Fall)

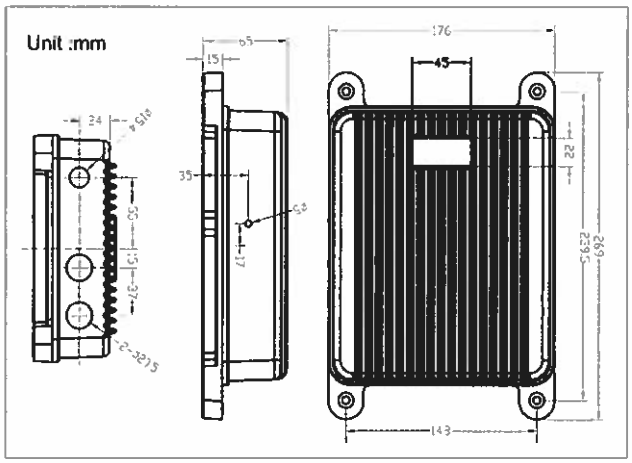

Order Info. PT-POS401GR-OT 55Vdc/30W Per Port/1000M/3,6(+), 1,2(-)/Surge Protection/IP67/Active

Packing PT-POS401GR-OT
Manual x 1

Option PT-POT-MBK Outdoor installation Kit

NetWay1DWP
Outdoor Single Port Hi-PoE Midspan Injector


NetWay1DWP

Description

Altronix NetWay1DWP outdoor single port midspan injector provides Hi-PoE (60W), PoE+ (30W), and PoE (15W). The unit is ideal for use with outdoor IP cameras and PTZs, WiMAX modems and WLAN access points. NetWay1DWP features a lightweight NEMA 4/4X IP66-11 rated enclosure that can be wall or pole mounted. The unit operates at 115VAC or 230VAC input. Model **NetWay1DWPH** features enclosure with three (3) 5/8" wiring inlets and includes NEMA rated wire glands.

Key Features

- IEEE 802.3af (15W), IEEE 802.3at (30W), and Hi-PoE (60W) compliant.
- Universal (115VAC or 230VAC) power input.
- Power provided using all 4 pairs on structured cable.
- 10/100/1000Mbps, half/full duplex, auto negotiation.
- Port provides up to 60W max.
- Power status LEDs.
- Auto detection and protection of legacy non-PoE cameras/devices.
- Extends Network link distance in an industrial environment.
- Lightweight molded fiberglass reinforced polyester enclosure is corrosion resistant, non-conductive and does not contain halogens.
- UL Listed in the U.S. and Canada.
- CE Approved.
- Lifetime Warranty / Made in the U.S.A.

Typical Application

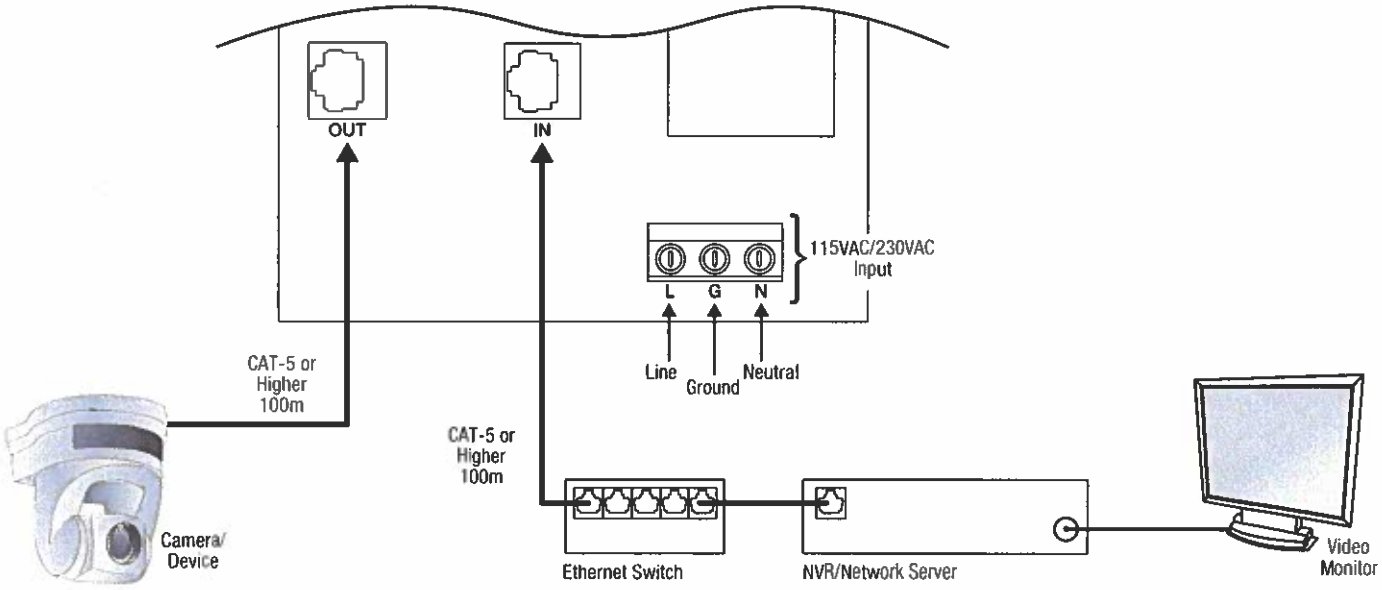

NetWay1DWP
Outdoor Single Port Hi-PoE Midspan Injector

Specifications

Input
115VAC, 60Hz, 1.2A or 230VAC, 50/60Hz, 0.75A.

Output
Maximum power: Hi-PoE (60W).
Power provided using all 4 pairs on structured cable.
IEEE 802.3at (30W), IEEE 802.3af (15W) or Hi-PoE (60W) compliant.
Aux. Class 2 power-limited output rated @ 56VDC/60W.
Integral surge protection.

Ethernet
Connectivity: RJ45, auto-crossover.
Wire type: 4-pair CAT5e or higher structured cable.
Distance: up to 100m.
Speed: 10/100/1000 BaseT, half/full duplex, auto negotiation.

Indicators (LED)
LED 1: PoE active.
LED 2: AC Power present.
Yellow and Green LEDs (by RJ45 jack): IP Link status, 10/100Base-T/active.

Agency Listings
UL/cUL: UL60950-1 (Information Technology Equipment). UL 60950-22 (Information Technology Equipment to be installed Outdoors).
CE: European Conformity.

Physical and Environmental
NEMA 4/4X, IP66-11 Rated enclosure for outdoor use.
Dimensions (W x L x H)
9.32" x 7.32" x 4.92" (236.7mm x 185.9mm x 125mm).
Weight (approx.)
Product Weight: 3.7 lb. (1.68 kg).
Shipping Weight: 5.0 lb. (2.27 kg).
Temperature
Operating:
30W: -30°C to 70°C (-22°F to 158°F).
60W: -30°C to 55°C (-22°F to 131°F).
Storage: -30°C to 85°C (-22°F to 185°F).
Relative Humidity 85% +/-5%.
Operating Altitude: -304.8m to 609.6m.

Accessories

PMK1 Pole Mount Kit (order separately)
PMK1 pole mount kit is designed to simplify installation of outdoor units.
It accommodates 2"- 8"(diameter) poles.
Kit includes:
- Two (2) powder coated steel mount brackets.
- Four (4) stainless steel bolts.
- Four (4) stainless steel lock washers.
- Two (2) wormgear quick release straps.

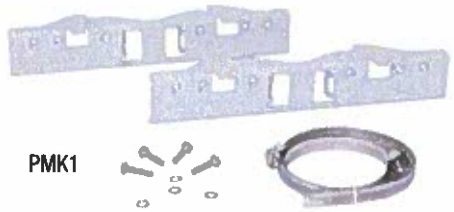

PROCET®
PoE System

Outdoor 1-port 60W PoE Injector

PT-PSE108GRW-OT

Introducton

PT-PSE108GRW-OT is a 60W 1-port lightning protection PoE injector special for outdoor using. It provides 55VDC,60W power for remote PDs over full 4-pairs output. It supports 6KV (10/700us) surge protection, and work temperature range is -40℃-65℃ with metal casing. It supports10/100/1000Mbps.

It provides power for IEEE802.3af/at PoE+ terminal high-power equipment,such as wireless AP, network camera and VoIP phone.

PT-PSE108GRW-OT designed for outdoor during input voltage 100-240VAC.It is connected to network equipment through Cat5e cable.The effective distance is 100 meters. With the installations PT-POT-MBK for fixing.

Work Functional Picture

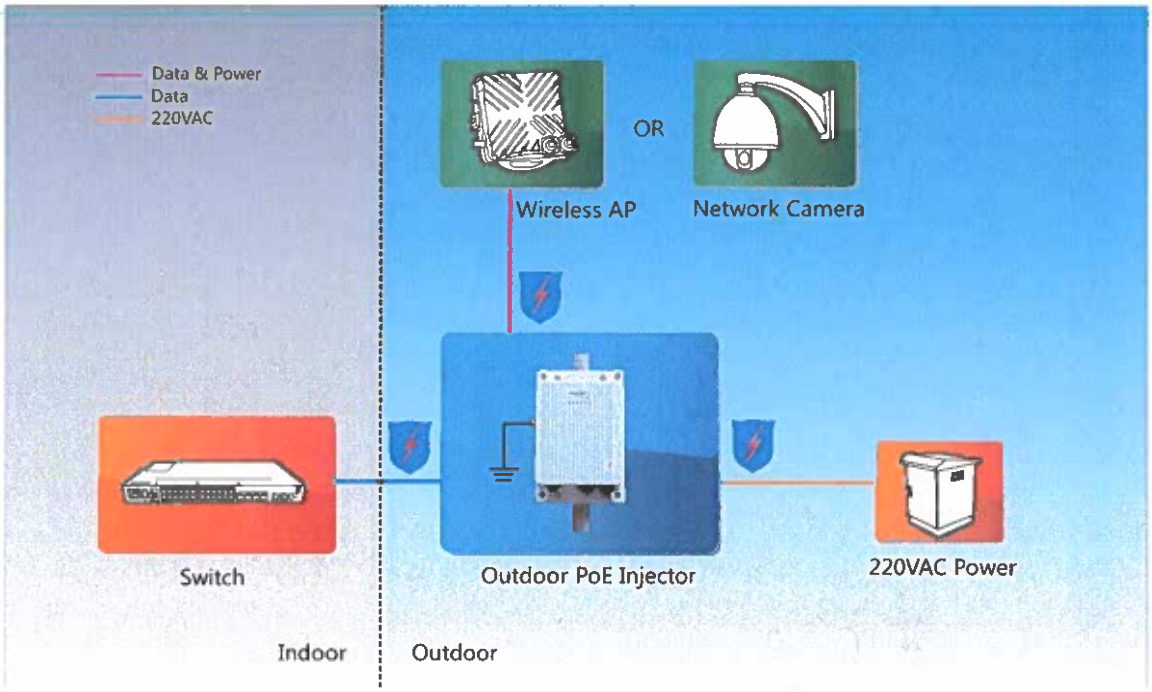

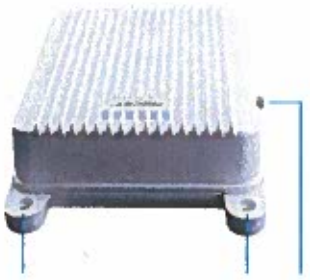

2. AC Input Port
3. LAN Data Input Port
4. PoE Power Output Port

8. GND
1,5,6,7. Install Hole

Key Features

- Outdoor using, detect PD before provide power
- Output 55V,current 1.1A,power60W
- Power pins:4/5(+),7/8(-) and 3/6(+),1/2(-)
- Provide signal and PoE output, lighting protection 6KV
- Wide temperature design:-40℃ to +65℃
- Metal casing,waterproof,dustproof,IP67
- Sealing gasket past extension,bearing,corrosion,aging test
- Easy install with install hole, need not to open equipment
- provide power for IEEE802.3af/at terminal equipment .

Outline Drawing

Unit :mm

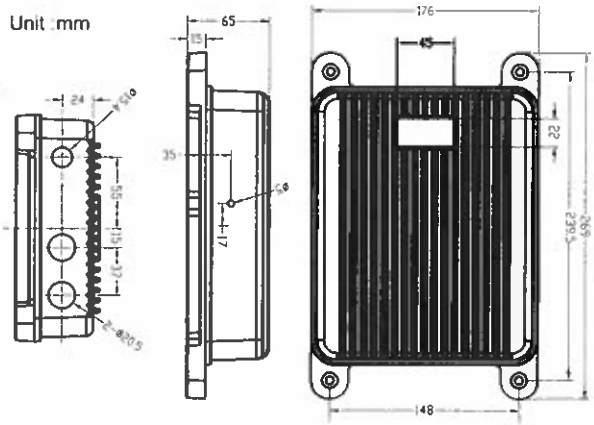

Specification

Standards

- IEEE802.3 10Base-T Ethernet
- IEEE802.3u 100Base-Tx Fast Ethernet
- IEEE8.2.3ab 1000Base-T Gigabit Ethernet
- Support terminal equipment with IEEE802.3af/IEEE802.3at
- RoHS Compliant
- WEEE Compliant,CE
- FCC Part 15,Class B
- EN 55022 Class B
- Protection Level: IP67, IEC60529, NEMA 250

PoE Power Output

- Port No.: 1
- Ethernet Pins: 4/5(+),7/8(-) & 3/6(+),1/2(-)
- Data rate: 10/100/1000Mbps
- Output voltage: 55V
- Output current: 1.1A
- Input AC voltage: 100-240VAC
- Input AC current: 1.5A@ 100-240VAC
- AC Hz: 50-60Hz

Dimension & Weight

- Dimension: 176mm X 269mm X 65mm
- Weight: 1.8kg

Environmental & conditions

- Operating Temperature: -40℃ to +65℃
- Operating Height: -304.8meters to 3048meters
- Operating Humidiy: 5% to 100% (non-condensing)

AC input surge protection

- 6KV

Network signal protection

- Protected Line:1,2,3,4,5,6,7,8
- Common-mode sugrge protection(10/700us): 6KV

PoE power output surge protection

- Different-mode suige protection(10/700us): 6KV
- Power clamp voltage(4,5-7,8): 60VDC

MBK Installation Structure

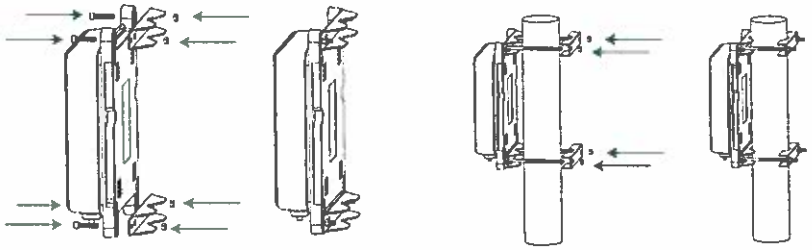

(1) (2) (3) (4)

Ordering Info: PT-PSE108GRW-OT 55VDC Output/60W/1000M/Outdoor IP67/Surge Protection/Active

Product packing: PT-PSE108GRW-OT x 1
Product manual x 1

WCS Series Power Supply

24 VAC POWER SUPPLY, OUTDOOR

Product Features

- 4 A or 20 A Capacities
- 1–4 Outputs
- Selectable Input Voltage
- 24 VAC Output or 28 VAC Output for Longer Wire Runs
- Meets NEMA Type 4X/IP66 Standards for Weatherproof Enclosure
- AC Power Indicator with Power On/Off Switch
- Compatible with Cameras, Domes, and Pan/Tilts
- WCS4-20B Has Class 2 Rated Outputs

WCS4-20/WCS4-20B

Power supplies in the **WCS Series** offer a variety of configurations for powering up to four outdoor units from a single power source.

The power supplies provide 24 VAC output for 1–4 units, depending on the model selected. To compensate for voltage losses over long wire runs, 28 VAC outputs are available on all models. The input voltage of all models is also selectable.

For integrated systems such as Spectra® and Esprit®, the power supplies are capable of handling pan/tilt, heater, and blower operation in addition to the camera.

The **WCS1-4** has one fused output and is capable of handling up to 4 A (100 VA) of total load. The WCS4-20 has four fused outputs and is capable of handling up to 20 A (480 VA) of total load. The **WCS4-20B** has four protected outputs with self-resetting circuit breakers and is capable of handling up to 12 A (288 VA) of total load. Fuses provide a greater degree of protection for the unit because they are faster acting and more precise. Circuit breakers will self-reset when the fault is corrected, eliminating the need for replacing fuses. However, the amount of current required to trip a circuit breaker can vary as much as 100 percent, depending on temperature. In the fused models, the values of fuses can be changed depending upon the specific current requirements of the equipment connected.

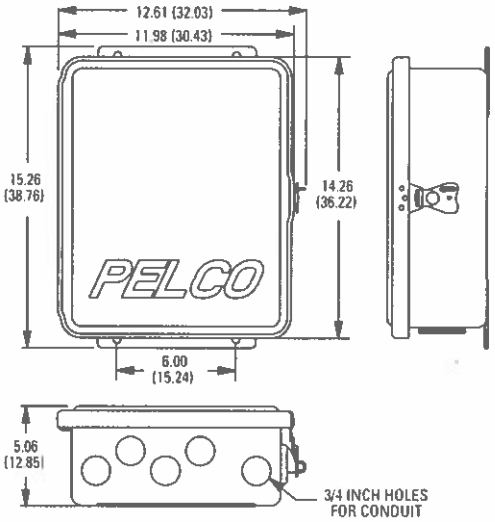

NOTE: VALUES IN PARENTHESES ARE CENTIMETERS, ALL OTHERS ARE

MODELS

WCS1-4	Outdoor camera power supply, 100/120/240 VAC input. One 24/26/28 VAC output, total current capacity of 4 A (100 VA).
WCS4-20	Outdoor multiple camera power supply, 120/240 VAC input. Four fused 24/28 VAC outputs, total current capacity of 20 A (480 VA).
WCS4-20B	Outdoor multiple camera power supply, 120/240 VAC input. Four protected 24/28 VAC outputs, total current capacity of 12 A (288 VA) with circuit breakers.

Product Capacity Chart

A partial list of compatible products and the number of units that may be powered by each power supply are listed below. Capacity is based on the VA rating of each product to be used with the power supply.

Product	Power Supply Model		
	WCS1-4 (100 VA)	WCS4-20 (480 VA)	WCS4-20B (288 VA)
CCD Camera (12 VA max)	1	4	4
Indoor Spectra (25 VA)	1	4	4
Outdoor Spectra (70 VA)	1	4	4
Outdoor DF5 (62 VA)	1	4	4
Esprit (70 VA)	1	4	4

MECHANICAL

Cable Entry	Hole plugs for 0.75-inch (1.9 cm) conduit
Latch	Stainless steel link-lock latch; can be secured with padlock (not supplied)

ELECTRICAL

Input Voltage	
WCS1-4	100/120/240 VAC, 50/60 Hz
WCS4-20/WCS4-20B	120 or 240 VAC, 50/60 Hz
Output Voltage	
WCS1-4	24/26/28 VAC
WCS4-20, WCS4-20B	24/28 VAC
Required Input Current	
WCS1-4	1 A
WCS4-20/WCS4-20B	4.40/2.30 A
Output Fuse Ratings	
WCS1-4	4 A*
WCS4-20	8 A*
Output Circuit Breaker Ratings	
WCS4-20B	3A*
Input Connectors	Screw-type barrier strips
Output Connectors	Screw-type barrier strips; WCS4-20B is suitable for Class 2 wiring
Input Wire Size	12–16 gauge solid wire
Output Wire Size	
WCS1-4	16–20 gauge solid or stranded wire
WCS4-20/-20B	16–22 gauge solid or stranded wire

GENERAL

Environment	Outdoor	
Operating Range	–50° to 122°F (–45.56° to 50°C)	
Construction	Aluminum	
Finish	Gray polyester powder coat	
Weight	Unit	Shipping
WCS1-4	6.8 lb (3.1 kg)	8 lb (3.6 kg)
WCS4-20/4-20B	16.2 lb (7.3 kg)	18 lb (8.1 kg)

*Individual output cannot exceed this rating, and the total of all outputs cannot exceed the overall rating of the power supply (refer to *Models*).

Pelco, Inc.
625 W. Alluvial Ave., Fresno, CA 93711 USA
USA & Canada Tel: (800) 289-9100 • FAX: (800) 289-9150
International Tel: +1 (559) 292-1981 • FAX: +1 (559) 348-1120
www.pelco.com

WCS1-4 POWER SUPPLY

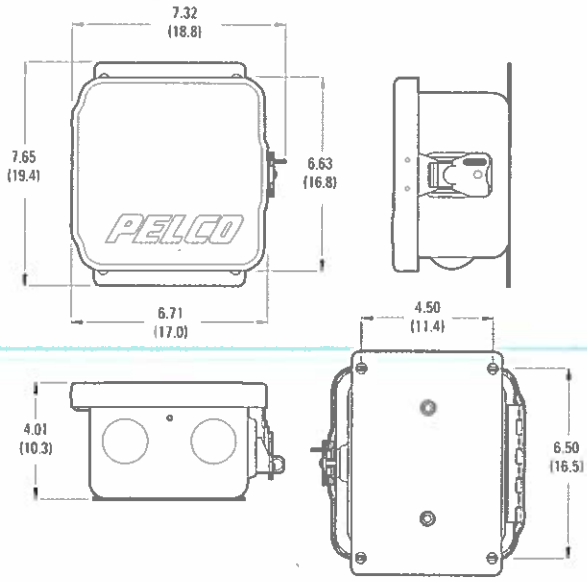

NOTE: VALUES IN PARENTHESES ARE CENTIMETERS; ALL OTHERS ARE INCHES.

The following are the recommended maximum distances (transformer to load) and are calculated with a 10 percent voltage drop. (Ten percent is generally the maximum allowable voltage drop for AC-powered devices.) Distances are calculated in feet; values in parentheses are meters.

Recommended Wiring Distance Chart

Input Voltage	Total VA Consumed	Wire Gauge					
		20 AWG (0.5 mm²)		18 AWG (1.0 mm²)		16 AWG (1.5 mm²)	
24 VAC	25	113	(34)	180	(55)	287	(87)
	50	56	(17)	90	(27)	143	(43)
	70	41	(12)	64	(19)	102	(31)
26 VAC	25	133	(40)	212	(64)	337	(103)
	50	66	(20)	105	(32)	168	(51)
	70	49	(15)	78	(24)	124	(38)
28 VAC	25	155	(47)	246	(75)	392	(119)
	50	77	(23)	122	(37)	195	(59)
	70	55	(17)	88	(27)	135	(41)

CERTIFICATIONS/RATINGS

- CE
- UL/cUL Listed
- Meets NEMA Type 4X and IP66 standards

⚠**WARNING:** Cancer and Reproductive Harm - www.P65Warnings.ca.gov.
⚠**ADVERTENCIA:** Cáncer y Daño Reproductivo - www.P65Warnings.ca.gov.
⚠**AVERTISSEMENT:** Cancer et Troubles de l'appareil reproducteur - www.P65Warnings.ca.gov.

PowerDsine® POE430-AT Midspan

High Power 4-port Gigabit Midspan for the enterprise market

PowerDsine® PoE Systems from Microsemi

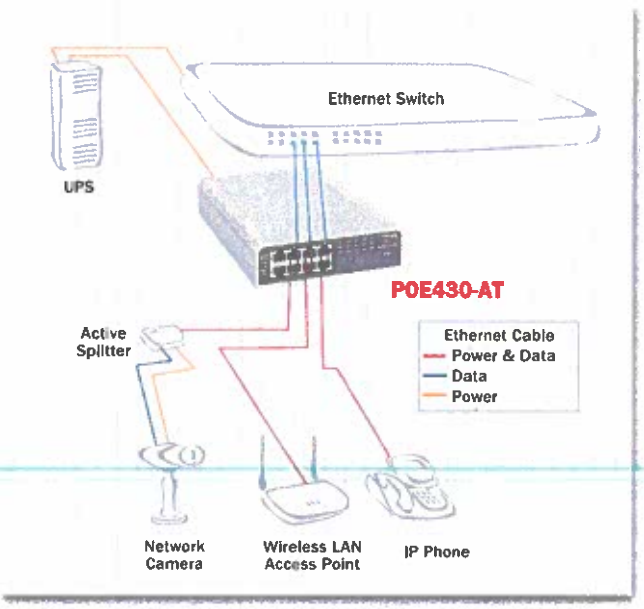

Overview

POE430-AT offers a cost effective, fully IEEE 802.3at compliant solution to upgrade existing infrastructure with PoE, guaranteeing 30 Watts of power through each port and ensuring safe operation of any standard PoE data terminal. It allows wireless LAN access points, security network cameras and IP terminals to receive power, along with data, over standard Ethernet cables, leaving network infrastructure completely unaltered.

POE430-AT Features

- A cost-effective solution to upgrade existing infrastructure to PoE
- Fully IEEE802.3at standard compliant
- Supports 10/100/1000Mbps data rates
- Safe & reliable power over existing Ethernet infrastructure
- Provides up to 30W per port for all ports
- 3 units can fit in 1U 19" rack
- Legacy PoE support

POE430-AT Specifications

No. of Ports	4
Pass Through Data Rates	10/100/1000Mbps
Power over Ethernet Output	Pin Assignment and Polarity: 4/5 (+), 7/8 (-) Output Power Voltage: 55Vdc User Port Power: 30W guaranteed
Input Power Requirements	AC Input Voltage: 90 to 264 Vac AC Input Current: 1.6A @ 110 Vac 0.8A @ 240 Vac AC Frequency: 50 to 60 Hz
Dimensions	148 mm x 224 mm x 43 mm 5.82 in. x 8.82 in. x 1.69 in
Weight	1.4 lbs (0.62 kg)
Indicators	System Indicator: AC Power (Green)
	User Indicator: Channel Power (Green)
Connectors	Shielded RJ-45, EIA 568A and 568B
Environmental Conditions	Operating Ambient Temperature: 32° to 104°F (0 to 40°C)
	Operating Humidity: Maximum 90%, Non-condensing
	Storage Temperature: -4° to 158°F (-20° to 70°C)
	Storage Humidity: Maximum 95%, Non-condensing
	Operating Altitude: -1000 to 10,000 ft. (-304.8 to 3048 m)
Reliability	MTBF: 150,000 hrs. @25°C
Thermal Rating	70 BTU/Hr (@240VAC)
Warranty	1-year
Regulatory Compliance	IEEE 802.3at (PoE), RoHS Compliant WEEE Compliant, CE
Electromagnetic Emission & Immunity	FCC Part 15, Class B EN 55022 Class B (Emissions) EN 55024 (Immunity), VCCI
Safety Approvals	UL/cUL Per EN 60950 GS Mark Per EN 60950

Ordering Information

Part Number	Name	Description
POE430-ATEU	POE Midspan (EU)	4-port, 30W per port
POE430-ATUS	POE Midspan (US)	4-port, 30W per port

Cisco Catalyst 1000 Series Switches Data Sheet

Updated: April 24, 2020

Product overview

Cisco® Catalyst® 1000 Series Switches are fixed managed Gigabit Ethernet enterprise-class Layer 2 switches designed for small businesses and branch offices. These are simple, flexible and secure switches ideal for out-of-the-wiring-closet and critical Internet of Things (IoT) deployments. Cisco® Catalyst® 1000 operate on Cisco IOS® Software and support simple device management and network management via a Command-Line Interface (CLI) as well as an on-box web UI. These switches deliver enhanced network security, network reliability, and operational efficiency for small organizations.

Product highlights

Cisco Catalyst 1000 Series Switches feature:

- 8, 16, 24, or 48 Gigabit Ethernet data or PoE+ ports with line-rate forwarding
- 2 or 4 fixed 1 Gigabit Ethernet Small Form-Factor Pluggable (SFP)/RJ 45 Combo uplinks or 4 fixed 0 Gigabit Ethernet Enhanced SFP (SFP+) uplinks
- Perpetual PoE+ support with a power budget of up to 740W
- CLI and/or intuitive web UI manageability options
- Network monitoring through sampled flow (sFlow)
- Security with 802.1X support for connected devices, Switched Port Analyzer (SPAN), and Bridge Protocol Data Unit (BPDU) Guard
- Compact fanless models available with a depth of less than 13 inches (33 cm)
- Device management support with over-the-air access via Bluetooth, Simple Network Management Protocol (SNMP), RJ-45, or USB console acces
- Reliability with a higher Mean Time Between Failures (MTBF) and an enhanced limited lifetime warranty support(E-LLW)

Switch models and configurations

Cisco Catalyst 1000 Series Switches include a single fixed power supply. Table 1 shows configuration information.

Table 1. Switch configurations

Product ID*	Gigabit Ethernet ports	Uplink interfaces	PoE+power budget	Fanless	Dimensions (WxDxH in inches)	Weight (kg)
C1000-8T-2G-L	8	2 SFP/ RJ-45 combo	-	Y	10.56 x 7.28 x 1.73	1.80
C1000-8T-E-2G-L	8	2 SFP/ RJ-45 combo	-	Y	10.56 x 7.28 x 1.73	1.55
C1000-8P-2G-L	8	2 SFP/ RJ-45 combo	67W	Y	10.56 x 12.73 x 1.73	1.55
C1000-8P-E-2G-L	8	2 SFP/ RJ-45 combo	67W	Y	10.56 x 7.28 x 1.73	1.55
C1000-8FP-2G-L	8	2 SFP/ RJ-45 combo	120W	Y	10.56 x 12.73 x 1.73	2.70
C1000-8FP-E-2G-L	8	2 SFP/ RJ-45 combo	120W	Y	10.56 x 7.28 x 1.73	2.70
C1000-16T-2G-L	16	2 SFP	-	Y	10.56 x 10.69 x 1.73	1.78
C1000-16T-E-2G-L	16	2 SFP	-	Y	10.56 x 8.26 x 1.73	1.42
C1000-16P-2G-L	16	2 SFP	120W	Y	10.56 x 11.69 x 1.73	2.38

Product ID*	Gigabit Ethernet ports	Uplink interfaces	PoE+power budget	Fanless	Dimensions (WxDxH in inches)	Weight (kg)
C1000-16P-E-2G-L	16	2 SFP	120W	Y	10.56 x 8.26x 1.73	1.42
C1000-16FP-2G-L	16	2 SFP	240W	Y	10.56 x 12.14 x 1.73	2.49
C1000-24T-4G-L	24	4 SFP	-	Y	17.5 x 9.45 x 1.73	2.63
C1000-24P-4G-L	24	4 SFP	195W	Y	17.5 x 11.76 x 1.73	3.53
C1000-24FP-4G-L	24	4 SFP	370W	N	17.5 x 13.59 x 1.73	4.6
C1000-48T-4G-L	48	4 SFP	-	N	17.5 x 10.73 x 1.73	3.95
C1000-48P-4G-L	48	4 SFP	370W	N	17.5 x 13.78 x 1.73	5.43
C1000-48FP-4G-L	48	4 SFP	740W	N	17.5 x 13.78 x 1.73	5.82
C1000-24T-4X-L	24	4 SFP+	-	Y	17.5 x 9.45 x 1.73	2.78

Product ID*	Gigabit Ethernet ports	Uplink interfaces	PoE+power budget	Fanless	Dimensions (WxDxH in inches)	Weight (kg)
C1000-24P-4X-L	24	4 SFP+	195W	Y	17.5 x 11.76 x 1.73	3.68
C1000-24FP-4X-L	24	4 SFP+	370W	N	17.5 x 13.59 x 1.73	4.6
C1000-48T-4X-L	48	4 SFP+	-	N	17.5 x 10.73 x 1.73	3.95
C1000-48P-4X-L	48	4 SFP+	370W	N	17.5 x 13.78 x 1.73	5.43
C1000-48FP-4X-L	48	4 SFP+	740W	N	17.5 x 13.78 x 1.73	5.82

***Please refer to local price lists for full product SKUs.**

Software

The software features supported on the Cisco Catalyst 1000 Series can be found on Cisco Feature Navigator: https://cfn.cloudapps.cisco.com/ITDIT/CFN/jsp/by-feature-technology.jsp

Switch management

Cisco Catalyst 1000 Series Switches support the following on-device management features:

- **Web UI** via Cisco Configuration Professional. Cisco Configuration Professional provides a user interface for day-zero provisioning, which enables easy onboarding of the switch. It also has an intuitive dashboard for configuring, monitoring, and troubleshooting the switch (Figure 1). For more information, about Cisco Configuration Professional, refer to https://www.cisco.com/c/en/us/products/cloud-systems-management/configuration-professional-catalyst/index.html.

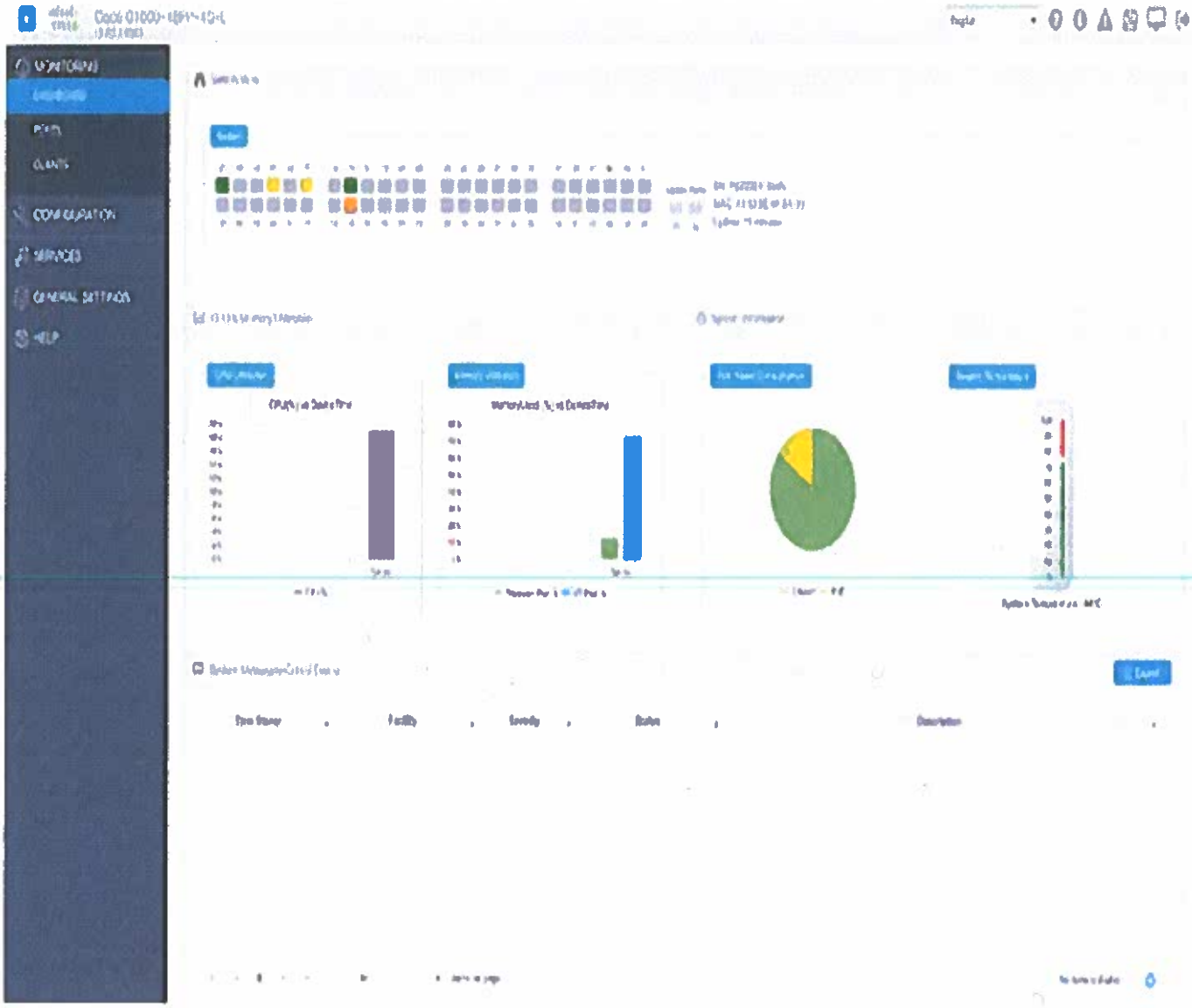

Figure 1.

Cisco Configuration Professional

- **Bluetooth** for over-the-air access. The switches support an external Bluetooth dongle that plugs into the USB port on the switch and allows a Bluetooth-based RF connection with external laptops and tablets (Figure 2). Laptops and tablets can access the switch CLI using a Telnet or Secure Shell (SSH) client over Bluetooth. The GUI can be accessed over Bluetooth with a browser.

Figure 2.

Over-the-air switch access using Bluetooth

- Single IP Management is available on the Cisco Catalyst 1000 Series switches. The uplink ports can be used to connect up to eight switches and manage them via a single IP address.

Network management

The Cisco Catalyst 1000 Series Switches offer a superior CLI for detailed configuration and administration.

Intelligent PoE+

Cisco Catalyst 1000 Series Switches support both IEEE 802.3af PoE and IEEE 802.3at PoE+ (up to 30W per port) to deliver a lower total cost of ownership for deployments that incorporate Cisco IP phones, Cisco Aironet® and Catalyst wireless access points, or other standards-compliant PoE and PoE+ end devices. PoE removes the need to supply wall power to PoE-enabled devices and eliminates the cost of adding electrical cabling and circuits that would otherwise be necessary in IP phone and WLAN deployments.

The PoE power allocation in the Cisco Catalyst 1000 Series Switches is dynamic, and power mapping scales up to a maximum of 740W of PoE+ power. Intelligent power management allows flexible power allocation across all ports. With Perpetual PoE, the PoE+ power is maintained during a switch reload. This is important for critical endpoints such as medical devices and for IoT endpoints such as PoE-powered lights, so that there is no disruption during a switch reboot.

Network security

Cisco Catalyst 1000 Series Switches provide a range of security features to limit access to the network and mitigate threats, including:

- **Comprehensive 802.1X** features to control access to the network, including flexible authentication, 802.1X monitor mode, and RADIUS change of authorization.
- **802.1X support with Network Edge Access Topology (NEAT)**, which extends identity authentication to areas outside the wiring closet (such as conference rooms).
- **IEEE 802.1X user distribution**, which enables you to load-balance users with the same group name across multiple different VLANs.
- **Ability to disable per-VLAN MAC learning** to allow you to manage the available MAC address table space by controlling which interface or VLANs learn MAC addresses.
- **Multidomain authentication** to allow an IP phone and a PC to authenticate on the same switch port while being placed on the appropriate voice and data VLANs.
- **Authentication, Authorization, and Accounting (AAA) command authorization** in PnP to enable seamless PnP provisioning.
- **Access Control Lists (ACLS)** for IPv6 and IPv4 security and Quality-of-Service (QoS) ACL elements (ACEs).
- **Port-based ACLs** for Layer 2 interfaces to allow security policies to be applied on individual switch ports.
- **SSH, Kerberos, and SNMP v3** to provide network security by encrypting administrator traffic during Telnet and SNMP sessions. SSH, Kerberos, and the cryptographic version of SNMP v3 require a special cryptographic software image because of U.S. export restrictions.
- **SPAN**, with bidirectional data support, to allow the Cisco Intrusion Detection System (IDS) to take action when an intruder is detected.
- **TACACS+ and RADIUS authentication** to facilitate centralized control of the switch and restrict unauthorized users from altering the configuration.
- **MAC address notification** to notify administrators about users added to or removed from the network.
- **MAC Authentication Bypass (MAB) and WebAuth with downloadable ACLs** to allow per-user ACLs to be downloaded from the Cisco Identity Services Engine (ISE) as policy enforcement after authentication using MAB or web authentication in addition to IEEE 802.1X.
- **Web authentication redirection** to enable networks to redirect guest users to the URL they had originally requested.
- **Multilevel security on console access** to prevent unauthorized users from altering the switch configuration.
- **BPDU Guard** to shut down Spanning Tree PortFast-enabled interfaces when BPDUs are received, to avoid accidental topology loops.
- **IP Source Guard** to restrict IP traffic on nonrouted Layer 2 interfaces by filtering traffic based on the Dynamic Host Configuration Protocol (DHCP) snooping binding database or by manually configuring IP source bindings.
- **SSH v2** to allow use of digital certificates for authentication between user and server.

- **Spanning Tree Root Guard (STRG)** to prevent edge devices that are not in the network administrator's control from becoming Spanning Tree Protocol (STP) root nodes.
- **Internet Group Management Protocol (IGMP) filtering** to provide multicast authentication by filtering out nonsubscribers and to limit the number of concurrent multicast streams available per port.
- **Dynamic VLAN assignment** through implementation of VLAN Membership Policy Server client capability to provide flexibility in assigning ports to VLANs. Dynamic VLAN facilitates the fast assignment of IP addresses.

Redundancy and resiliency

Cisco Catalyst 1000 Series Switches offer a number of redundancy and resiliency features to prevent outages and help ensure that the network remains available:

- **IEEE 802.1s/w Rapid Spanning Tree Protocol (RSTP) and Multiple Spanning Tree Protocol (MSTP)** provide rapid spanning-tree convergence independent of spanning-tree timers and also offer the benefits of Layer 2 load balancing and distributed processing.
- **Per-VLAN Rapid Spanning Tree (PVRST+)** allows rapid spanning-tree reconvergence on a per-VLAN spanning-tree basis, without requiring the implementation of spanning-tree instances.
- **Switch-port auto-recovery (error disable)** automatically attempts to reactivate a link that is disabled because of a network error.
- **Link state tracking** binds the link state of multiple interfaces. The server Network Interface Cards (NICs) form a group to provide redundancy in the network. When the link is lost on the primary interface, network connectivity is transparently changed to the secondary interface.

Enhanced QoS

Cisco Catalyst 1000 Series Switches offer intelligent traffic management that keeps everything flowing smoothly. Flexible mechanisms for marking, classifying, and scheduling deliver superior performance for data, voice, and video traffic, all at wire speed. Primary QoS features include:

- Up to **eight egress queues** and two thresholds per port, supporting egress bandwidth control, shaping, and priority queuing so that high-priority packets are serviced ahead of other traffic.
- **Ingress policing** to allow the analysis of IP service levels for IP applications and services using active traffic monitoring – generating traffic in a continuous, reliable, and predictable manner – for measuring network performance. The number of ingress policers available per port is 64.
- **QoS through Differentiated Services Code Point (DSCP) mapping and filtering**.
- **QoS through traffic classification**.
- **Trust boundary** to configure device-based trust.
- **AutoQoS** to simplify the deployment of QoS features.
- **Shaped Round Robin** (SRR) scheduling and **Weighted Tail Drop** (WTD) congestion avoidance.
- **802.1p Class of Service** (CoS) classification, with marking and reclassification.

Energy management

Cisco Catalyst 1000 Series Switches offer a range of industry-leading features for energy efficiency and management:

- **IEEE 802.3az Energy Efficient Ethernet** (EEE) enables ports to dynamically sense idle periods between traffic bursts and quickly switch the interfaces into a low-power idle mode, reducing power consumption.
- **Loop detection** is a new method to detect network loops in the absence of STP.
- **Cisco AutoConfig** determines the level of network access provided to an endpoint based on the type of device. This feature also permits hard binding between the end device and the interface.
- **Cisco Auto SmartPorts** enables automatic configuration of switch ports as devices connect to the switch with settings optimized for the device type, resulting in zero-touch port-policy provisioning.
- **Cisco Smart Troubleshooting** is an extensive array of diagnostic commands and system health checks in the switch, including Smart Call Home. The Cisco Generic Online Diagnostics (GOLD) and online diagnostics on switches in live networks help predict and detect failures more quickly.

For more information about Cisco Catalyst SmartOperations, visit cisco.com/go/SmartOperations.

Operational simplicity

- **Cisco AutoSecure** provides a single-line CLI to enable baseline security features (port security, DHCP snooping, Dynamic Address Resolution Protocol [ARP] Inspection). This feature simplifies security configurations with a single touch.
- **DHCP** auto configuration of multiple switches through a boot server eases switch deployment.
- **Auto negotiation** on all ports automatically selects half- or full-duplex transmission mode to optimize bandwidth.
- **Dynamic Trunking Protocol (DTP)** facilitates dynamic trunk configuration across all switch ports.
- **Port Aggregation Protocol (PAgP)** automates the creation of Cisco Fast EtherChannel groups or Gigabit EtherChannel groups to link to another switch, router, or server.
- **Link Aggregation Control Protocol (LACP)** allows the creation of Ethernet channeling with devices that conform to IEEE 802.3ad. This feature is similar to Cisco EtherChannel technology and PAgP.
- **Automatic Media-Dependent Interface Crossover (MDIX)** automatically adjusts transmit and receive pairs if an incorrect cable type (crossover or straight-through) is installed.
- **Unidirectional Link Detection Protocol (UDLD)** and Aggressive UDLD allow unidirectional links caused by incorrect fiber-optic wiring or port faults to be detected and disabled on fiber-optic interfaces.
- **Local Proxy ARP** works in conjunction with Private VLAN Edge to minimize broadcasts and maximize available bandwidth.
- **VLAN1 minimization** allows VLAN1 to be disabled on any individual VLAN trunk.
- **IGMP** snooping for IPv4 and IPv6 and Multicast Listener Discovery (MLD) v1 and v2 snooping provide fast client joins and leaves of multicast streams and limit bandwidth-intensive video traffic to only the requesters.
- **Per-port broadcast, multicast, and unicast storm control** prevents faulty end stations from degrading overall system performance.
- **Voice VLAN** simplifies telephony installations by keeping voice traffic on a separate VLAN for easier administration and troubleshooting.

- **Cisco VLAN Trunking Protocol (VTP)** supports dynamic VLANs and dynamic trunk configuration across all switches.
- **Layer 2 trace route** eases troubleshooting by identifying the physical path that a packet takes from source to destination.
- **Trivial File Transfer Protocol (TFTP)** reduces the cost of administering software upgrades by downloading from a centralized location.
- **Network Time Protocol (NTP)** provides an accurate and consistent timestamp to all intranet switches.

Specifications

Product specifications (Table 2) apply to both PoE and non-PoE models.

Table 2. Specifications

	8-port models	16-port models	24-port models (1/10G uplinks)	48-port models (1/10G uplinks)
Console ports				
RJ-45 Ethernet	1	1	1	1
USB mini-B	1	1	1	1
USB-A port for storage and Bluetooth console	1	1	1	1
Memory and processor				
CPU	ARM v7 800 MHz	ARM v7 800 MHz	ARM v7 800 MHz	ARM v7 800 MHz
DRAM	512 MB	512 MB	512 MB	512 MB

	8-port models	16-port models	24-port models (1/10G uplinks)	48-port models (1/10G uplinks)
Flash memory	256 MB	256 MB	256 MB	256 MB
Performance				
Forwarding bandwidth	10 Gbps	18 Gbps	1G: 28 Gbps 10G: 64 Gbps	1G: 52 Gbps 10G: 88Gpbs
Switching bandwidth	20 Gbps	36 Gbps	1G: 56 Gbps 10G: 128 Gbps	1G: 104 Gbps 10G: 176 Gbps
Forwarding rate (64-byte L3 packets)	14.88 Mpps	26.78 Mpps	41.67 Mpps	77.38 Mpps
Unicast MAC addresses	16000	16000	16000	16000
IPv4 unicast direct routes	542	542	542	542
IPv4 unicast indirect routes	256	256	256	256
IPv6 unicast direct routes	414	414	414	414

	8-port models	16-port models	24-port models (1/10G uplinks)	48-port models (1/10G uplinks)
IPv6 unicast indirect routes	128	128	128	128
IPv4 multicast routes and IGMP groups	1024	1024	1024	1024
IPv6 multicast groups	1024	1024	1024	1024
IPv4/MAC security ACEs	600	600	600	600
IPv6 security ACEs	600	600	600	600
Maximum active VLANs	256	256	256	256
VLAN IDs available	4094	4094	4094	4094
Maximum STP instances	64	64	64	64
Maximum SPAN sessions	4	4	4	4

	8-port models	16-port models	24-port models (1/10G uplinks)	48-port models (1/10G uplinks)
MTU-L3 packet	9198 bytes	9198 bytes	9198 bytes	9198 bytes
Jumbo Ethernet frame	10,240 bytes	10,240 bytes	10,240 bytes	10,240 bytes
Dying Gasp	Yes	Yes	Yes	Yes
MTBF in hours (data)	2,171,669	2,165,105	2,026,793	1,452,667
MTBF in hours (PoE)	1,786,412, 1,706,649 (External PS)	706,983	698,220	856,329
MTBF in hours (Full PoE)	1,706,649	-	698,220	856,329
Environmental				
Operating temperature Seal level	-5 to 50 deg C*			
Up to 5,000ft (1500 m)	-5 to 45 deg C			
Upto 10,000 (3000 m)	-5 to 40 deg C			

	8-port models	16-port models	24-port models (1/10G uplinks)	48-port models (1/10G uplinks)
Operating altitude	10,000 ft (3,000m)			
Operating relative humidity	5% to 90% at 40C			
Storage temperature	-13 to 158F (-25 to 70C)			
Storage altitude	15,000 ft (4500m)			
Storage relative humidit	5% to 95% at 65C			

***Note:**	50C operation is supported for short term operation only; GLC-BX-D/U and CWDM optics cannot support 50C operation; Minimum ambient temperature for cold start is at 0C (32F)

Electrical	**Data**	**Data Ext.PS**	**Data**	**Data Ext. PS**	**Data**	**Data**
Voltage (auto ranging)	110 to 220V AC in	110 to 220V AC in	110 to 220V AC in	110 to 220V AC in	110 to 220V AC in	110 to 220V AC in
Frequency	50 to 60 Hz	50 to 60 Hz	50 to 60 Hz	50 to 60 Hz	50 to 60 Hz	50 to 60 Hz
Current	0.13A to 0.22A	0.16A to 0.26A	0.16A to 0.26A	0.19A to 0.31A	0.20A to 0.33A	0.29A to 0.48A

	8-port models		16-port models		24-port models (1/10G uplinks)	48-port models (1/10G uplinks)
Power rating (maximum consumption)	0.04 kVA	0.017 kVA	0.05 kVA	0.05 kVA	0.06 kVA	0.09 kVA
Electrical	**PoE**	**PoE Ext. PS**	**PoE**	**PoE Ext. PS**	**PoE**	**PoE**
Voltage (auto ranging)	110 to 220V AC in	110 to 220V AC in	110 to 220V AC in	110 to 220V AC in	110 to 220V AC in	110 to 220V AC in
Frequency	50 to 60 Hz	50 to 60 Hz	50 to 60 Hz	50 to 60 Hz	50 to 60 Hz	50 to 60 Hz
Current	0.22A to 0.27A	0.22A to 0.37A	0.24A to 0.28A	0.14A to 0.24A	0.37A to 0.64A	0.37A to 0.64A
Power rating (maximum consumption)	0.11 kVA	0.087 kVA	0.19 kVA	0.20 kVA	0.48 kVA	0.48 kVA
Electrical	**Full PoE**	**Full PoE Ext. PS**	**Full PoE**		**Full PoE**	**Full PoE**

	8-port models		16-port models		24-port models (1/10G uplinks)	48-port models (1/10G uplinks)
Voltage (auto ranging)	110 to 220V AC in	110 to 220V AC in	110 to 220V AC in		110 to 220V AC in	110 to 220V AC in
Frequency	50 to 60 Hz	50 to 60 Hz	50 to 60 Hz		50 to 60 Hz	50 to 60 Hz
Current	0.23A to 0.28A	0.15A to 0.2A	0.35A to 0.37A		0.29A to 0.48A	0.45A to 0.94A
Power rating (maximum consumption)	0.15 kVA	0.15 kVA	0.45 kVA		0.8 kVA	0.95 kVA
Power consumption (watts)	**Data**	**Data Ext.PS**	**Data**	**Data Ext. PS**	**Data**	**Data**
0% traffic	14.04	13.15	14.52	14.4	1G: 15.84 10G: 18	1G: 27.37 10G: 29.4
10% traffic	14.06	13.76	16.44	16.44	1G: 22.08 10G: 24.48	1G: 41.57 10G: 42.28
100% traffic	14.26	14	16.68	16.68	1G: 22.8 10G: 25.68	1G: 53.66 10G: 54.73

	8-port models		16-port models		24-port models (1/10G uplinks)	48-port models (1/10G uplinks)
Weighted average	14.12	13.64	15.88	15.84	1G: 20.2 10G: 22.7	1G: 40.87 10G: 42.1
Power consumption (watts)	**PoE**	**PoE Ext. PS**	**PoE**	**PoE Ext. PS**	**PoE**	**PoE**
0% traffic	10.22	9.13	14.64	13.68	1G: 15.84 10G: 18	1G: 27.9 10G: 28.0
10% traffic	12.02	15.39	16.56	15.48	1G: 22.44 10G: 24.72	1G: 42.77 10G: 42.73
100% traffic	12.19	15.71	16.92	16.32	1G: 23.16 10G: 25.68	1G: 54.25 10G: 54.49
Weighted average	11.48	13.41	16.04	15.16	1G: 20.48 10G: 22.8	1G: 41.64 10G: 41.74
Power consumption (watts)	**Full PoE**	**Full PoE Ext. PS**	**Full PoE**		**Full PoE**	**Full PoE**
0% traffic	13.44	14.3	14.4		1G: 18.36 10G: 19.68	1G: 30.61 10G: 30.91
10% traffic	14.4	14.9	16.68		1G: 26.16 10G: 26.28	1G: 45.16 10G: 45.78

	8-port models		16-port models	24-port models (1/10G uplinks)	48-port models (1/10G uplinks)
100% traffic	14.52	15.7	16.8	1G: 35.4 10G: 36	1G: 61.66 10G: 62.26
Weighted average	14.12	14.97	15.96	1G: 26.68 10G: 27.32	1G: 45.81 10G: 46.31

Note: The wattage rating on the power supply does not represent actual power draw. It indicates the maximum power draw possible by the power supply. This rating can be used for facility capacity planning. For PoE switches, cooling requirements are smaller than total power draw because a significant portion of the load is dissipated in the endpoints.

Acoustic noise (48-port PoE models only)

Sound pressure	LpA (typical)	35 dB
	LpAD (maximum)	39 dB
Sound power	LwA (typical)	4.8 B
	LwAD (maximum)	5.2 B

Note: Bystander positions operating mode at 77° F (25° C) ambient.

Safety and compliance

	8-port models	16-port models	24-port models (1/10G uplinks)	48-port models (1/10G uplinks)
Safety	UL 60950-1 Second Edition, CAN/CSA-C22.2 No. 60950-1 Second Edition, EN 60950-1 Second Edition, IEC 60950-1 Second Edition, AS/NZS 60950-1, IEC 62368-1, UL 62368-1 GB 4943.1-2011			
EMC: Emissions	47CFR Part 15 Class A, AS/NZS CISPR32 Class A, CISPR32 Class A, EN55032 Class A, ICES-003 Class A, VCCI-CISPR32 Class A, EN61000-3-2, EN61000-3-3, KN32 Class A, CNS13438 Class A			
EMC: Immunity	EN55024 (including EN 61000-4-5), EN300386, KN35			
Environmental	Reduction of Hazardous Substances (RoHS) including Directive 2011/65/EU			
Telco	Common Language Equipment Identifier (CLEI) code			
U.S. government certifications	USGv6 and IPv6 Ready Logo			
Connectors and interfaces				
Ethernet interfaces	10BASE-T ports: RJ-45 connectors, 2-pair Category 3, 4, or 5 Unshielded Twisted Pair (UTP) cabling			
	100BASE-TX ports: RJ-45 connectors, 2-pair Category 5 UTP cabling			
	1000BASE-T ports: RJ-45 connectors, 4-pair Category 5 UTP cabling			

	8-port models	16-port models	24-port models (1/10G uplinks)	48-port models (1/10G uplinks)
	1000BASE-T SFP-based ports: RJ-45 connectors, 4-pair Category 5 UTP cabling			
Indicator LEDs	Per-port status: link integrity, disabled, activity			
	System status: System			
Console cables	CAB-CONSOLE-RJ45 Console cable 6 ft. with RJ-45			
	CAB-CONSOLE-USB Console cable 6 ft. with USB Type A and mini-B connectors			
Power	Use the supplied AC power cord to connect the AC power connector to an AC power outlet Models have external power supply			
Management				
	BRIDGE-MIB CISCO-CABLE-DIAG-MIB CISCO-CDP-MIB CISCO-CLUSTER-MIB CISCO-CONFIG-COPY-MIB CISCO-CONFIG-MAN-MIB CISCO-DHCP-SNOOPING-MIB	CISCO-PORT-QOS-MIB CISCO-PORT-SECURITY-MIB CISCO-PORT-STORM-CONTROL-MIB CISCO-PRODUCTS-MIB CISCO-PROCESS-MIB CISCO-RTTMON-MIB CISCO-SMI-MIB CISCO-STP-EXTENSIONS-MIB CISCO-SYSLOG-MIB	IF-MIB INET-ADDRESS-MIB OLD-CISCO-CHASSIS-MIB OLD-CISCO-FLASH-MIB OLD-CISCO-INTERFACES-MIB OLD-CISCO-IP-MIB OLD-CISCO-SYS-MIB OLD-CISCO-TCP-MIB OLD-CISCO-TS-MIB	

	8-port models	16-port models	24-port models (1/10G uplinks)	48-port models (1/10G uplinks)
	CISCO-ENTITY-VENDORTYPE-OID-MIB	CISCO-VLAN-MEMBERSHIP-MIB	MIB	SNMP-MPD-MIB
	CISCO-ENVMON-MIB	CISCO-VTP-MIB		SNMP-NOTIFICATION-MIB
	CISCO-ERR-DISABLE-MIB	ENTITY-MIB		SNMP-TARGET-MIB
	CISCO-FLASH-MIB	ETHERLIKE-MIB		SNMPv2-MIB
	CISCO-FTP-CLIENT-MIB	IEEE8021-PAE-MIB		TCP-MIB
	CISCO-IGMP-FILTER-MIB	IEEE8023-LAG-MIB		UDP-MIB
	CISCO-IMAGE-MIB			
	CISCO-IP-STAT-MIB			
	CISCO-LAG-MIB			
	CISCO-MAC-NOTIFICATION-MIB			
	CISCO-MEMORY-POOL-MIB			
	CISCO-PAGP-MIB			
	CISCO-POE-EXTENSIONS-MIB			

For an updated list of supported MIBs, refer to the MIB Locator at cisco.com/go/mibs.

Standards

	8-port models	16-port models	24-port models (1/10G uplinks)	48-port models (1/10G uplinks)
	IEEE 802.1D STP IEEE 802.1p CoS Prioritization IEEE 802.1Q VLAN IEEE 802.1s IEEE 802.1w IEEE 802.1X IEEE 802.1ab LLDP Bluetooth v4.0	IEEE 802.3ad IEEE 802.3af and IEEE 802.3at IEEE 802.3ah (100BASE-X single/multimode fiber only) IEEE 802.3x full duplex on 10BASE-T, 100BASE-TX, and 1000BASE-T ports IEEE 802.3 10BASE-T IEEE 802.3u 100BASE-TX	IEEE 802.3ab 1000BASE-T IEEE 802.3z 1000BASE-X RMON I and II standards SNMP v1, v2c, and v3 IEEE 802.3az IEEE 802.3ae 10 Gigabit Ethernet IEEE 802.1ax	

RFC compliance

	8-port models	16-port models	24-port models (1/10G uplinks)	48-port models (1/10G uplinks)
	RFC 768 - UDP RFC 783 - TFTP RFC 791 - IP RFC 792 - ICMP RFC 793 - TCP RFC 826 - ARP RFC 854 - Telnet RFC 951 - Bootstrap Protocol (BOOTP) RFC 959 - FTP RFC 1112 - IP Multicast and IGMP RFC 1157 - SNMP v1 RFC 1166 - IP Addresses	RFC 1256 - ICMP Router Discovery RFC 1305 - NTP RFC 1492 - TACACS+ RFC 1493 - Bridge MIB RFC 1542 - BOOTP extensions RFC 1901 - SNMP v2C RFC 1902-1907 - SNMP v2 RFC 1981 - Maximum Transmission Unit (MTU) Path Discovery IPv6 FRC 2068 - HTTP RFC 2131 - DHCP RFC 2138 - RADIUS RFC 2233 - IF MIB v3		

Warranty

Cisco Catalyst 1000 Series Switches come with an enhanced limited lifetime warranty (E-LLW). The E-LLW provides the same terms as the Cisco standard limited lifetime warranty but adds next-business-day delivery of replacement hardware, where available, and 90 days of 8x5 Cisco Technical Assistance Center (TAC) support. Your formal warranty statement, including the warranty applicable to Cisco software, appears in the information packet that accompanies your Cisco product. We encourage you to review carefully the warranty statement shipped with your specific product before use.

Cisco reserves the right to refund the purchase price as its exclusive warranty remedy. For more information about warranty terms, visit https://www.cisco.com/go/warranty and see Table 3 below.

Table 3. Warranty information

Cisco enhanced limited lifetime hardware warranty

Cisco enhanced limited lifetime hardware warranty

Device covered	Applies to all Cisco Catalyst 1000 Series Switches
Warranty duration	As long as the original end user continues to own or use the product.
End-of-life policy	In the event of discontinuance of product manufacture, Cisco warranty support is limited to 5 years from the announcement of discontinuance.
Hardware replacement	Cisco or its service center will use commercially reasonable efforts to ship a Cisco Catalyst 1000 Series replacement part for next-business-day delivery, where available. Otherwise, a replacement will be shipped within 10 working days after the receipt of the RMA request. Actual delivery times might vary depending on customer location.
Effective date	Hardware warranty commences from the date of shipment to the customer (and in case of resale by a Cisco reseller, not more than 90 days after original shipment by Cisco).
TAC support	Cisco will provide, during the customer's local business hours, 8 hours per day, 5 days per week basic configuration, diagnosis, and troubleshooting of device-level problems for up to 90 days from the date of shipment of the originally purchased Cisco Catalyst 1000 Series product. This support does not include solution or network-level support beyond the specific device under consideration.
Cisco.com access	Warranty allows guest access only to Cisco.com.

Cisco environmental sustainability

Information about Cisco's environmental sustainability policies and initiatives for our products, solutions, operations, and extended operations or supply chain is provided in the "Environment Sustainability" section of Cisco's Corporate Social Responsibility (CSR) Report.

Reference links to information about key environmental sustainability topics (mentioned in the "Environment Sustainability" section of the CSR Report) are provided in the following table:

Sustainability topic	Reference
Information on product material content laws and regulations	Materials
Information on electronic waste laws and regulations, including products, batteries, and packaging	WEEE compliance

Cisco makes the packaging data available for informational purposes only. It may not reflect the most current legal developments, and Cisco does not represent, warrant, or guarantee that it is complete, accurate, or up to date. This information is subject to change without notice.

Software policy

Customers are provided with maintenance updates and bug fixes designed to maintain the compliance of the software with published specifications, release notes, and industry standards as long as the original end user continues to own or use the product or up to one year from the end-of-sale date for this product, whichever occurs earlier.

This policy supersedes any previous warranty or software statement and is subject to change without notice.

Technical support and services

Table 4 describes available technical services.

Table 4. Technical services available

Technical services
Cisco Smart Net Total Care® Service • Around-the-clock, global access to the Cisco TAC • Unrestricted access to the extensive Cisco.com knowledge base and tools • Next-business-day, 8x5x4, 24x7x4, or 24x7x2 advance hardware replacement and onsite parts replacement and installation available [1] • Ongoing operating system software updates within the licensed feature set [2] • Proactive diagnostics and real-time alerts on Smart Call Home-enabled devices

Technical services

Cisco Smart Foundation Service

- Next-business-day advance hardware replacement as available
- Access to SMB TAC during business hours (access levels vary by region)
- Access to Cisco.com SMB knowledge base
- Online technical resources through Smart Foundation portal
- Operating system software bug fixes and patches

Cisco Smart Care Service

- Network-level coverage for the needs of small and medium-sized businesses
- Proactive health checks and periodic assessments of Cisco network foundation, voice, and security technologies
- Technical support for eligible Cisco hardware and software through Smart Net Total Care portal
- Cisco operating system and application software updates and upgrades [2]
- Next-business-day advance hardware replacement as available, 24x7x4 option available [1]

Cisco SP Base Service

- Around-the-clock, global access to the Cisco TAC
- Registered access to Cisco.com
- Next-business-day, 8x5x4, 24x7x4, and 24x7x2 advance hardware replacement; return to factory option available [1]
- Ongoing operating system software updates [2]

Cisco Focused Technical Support Services

Three levels of premium, high-touch services are available:

- Cisco High-Touch Operations Management Service
- Cisco High-Touch Technical Support Service
- Cisco High-Touch Engineering Service

Valid Cisco Smart Net Total Care or SP Base contracts are required on all network equipment.

[1] **Advance hardware replacement is available in various service-level combinations. For example, 8x5xNBD indicates that shipment is initiated during the standard 8-hour business day, 5 days a week (the generally accepted business days within the relevant region), with Next-Business-Day (NBD) delivery. Where NBD is not available, same-day shipping is provided. Restrictions apply; for details, review the appropriate service descriptions.**

[2] **Cisco operating system updates include the following: maintenance releases, minor updates, and major updates within the licensed feature set.**

Accessories

Table 5 describes the available accessories.

Table 5. Accessories

Part number	Description	Compatibility
CAB-CONSOLE-RJ45	Console Cable 6 Feet with RJ-45	All models
CAB-CONSOLE-USB	Console Cable 6 Feet with USB Type A and mini-B Connectors	All models
PWR-CLP	Power Cable Restraining Clip	All models
Cisco Catalyst 1000 Series rack mounting kit		
RCKMNT-1RU-2KX=	Rackmount kit for 1 RU for 2960-X and 2960-XR (19/23/24/etsi)	All 24/48 port models
RCKMNT-19-CMPCT=	19" Rack Mount bracket for 3560-CX and 2960CX	All 8/16 port models
RCKMNT-23-CMPCT=	23" and 24" Rack Mount bracket for 3560-CX and 2960-CX	All 8/16 port models

Ordering information

Tables 6 and 7 list ordering information for the Cisco Catalyst 1000 Series Switches. To place an order, visit the Cisco Ordering homepage at https://www.cisco.com/en/US/ordering/or13/or8/order_customer_help_how_to_order_listing.html.

Table 6. Cisco Catalyst 1000 Series Switches ordering information

Product number	Description

Product number	Description
Cisco Catalyst 1000 Series Switches with 2x 1GSFP and RJ-45 combo uplinks	
C1000-8T-2G-L	8x 10/100/1000 Ethernet ports, 2x 1G SFP and RJ-45 combo uplinks
C1000-8T-E-2G-L	8x 10/100/1000 Ethernet ports, 2x 1G SFP and RJ-45 combo uplinks, with external PS
C1000-8P-2G-L	8x 10/100/1000 Ethernet PoE+ ports and 67W PoE budget, 2x 1G SFP and RJ-45 combo uplinks
C1000-8P-E-2G-L	8x 10/100/1000 Ethernet PoE+ ports and 67W PoE budget, 2x 1G SFP and RJ-45 combo uplinks, with external PS
C1000-8FP-2G-L	8x 10/100/1000 Ethernet PoE+ ports and 120W PoE budget, 2x 1G SFP and RJ-45 combo uplinks
C1000-8FP-E-2G-L	8x 10/100/1000 Ethernet PoE+ ports and 120W PoE budget, 2x 1G SFP and RJ-45 combo uplinks, with external PS
Cisco Catalyst 1000 Series Switches with 2x 1G SFP uplinks	
C1000-16T-2G-L	16x 10/100/1000 Ethernet ports, 2x 1G SFP uplinks
C1000-16T-E-2G-L	16x 10/100/1000 Ethernet ports, 2x 1G SFP uplinks with external PS
C1000-16P-2G-L	16x 10/100/1000 Ethernet PoE+ ports and 120W PoE budget, 2x 1G SFP uplinks

Product number	Description
C1000-16P-E-2G-L	16x 10/100/1000 Ethernet PoE+ ports and 120W PoE budget, 2x 1G SFP uplinks with external PS
C1000-16FP-2G-L	16x 10/100/1000 Ethernet PoE+ ports and 240W PoE budget, 2x 1G SFP uplinks
Cisco Catalyst 1000 Series Switches with 4x 1G SFP uplinks	
C1000-24T-4G-L	24x 10/100/1000 Ethernet ports, 4x 1G SFP uplinks
C1000-24P-4G-L	24x 10/100/1000 Ethernet PoE+ ports and 195W PoE budget, 4x 1G SFP uplinks
C1000-24FP-4G-L	24x 10/100/1000 Ethernet PoE+ ports and 370W PoE budget, 4x 1G SFP uplinks
C1000-48T-4G-L	48x 10/100/1000 Ethernet ports, 4x 1G SFP uplinks
C1000-48P-4G-L	48x 10/100/1000 Ethernet PoE+ and 370W PoE budget ports, 4x 1G SFP uplinks
C1000-48FP-4G-L	48x 10/100/1000 Ethernet PoE+ ports and 740W PoE budget, 4x 1G SFP uplinks
Cisco Catalyst 1000 Series Switches with 4x 10G SFP+ uplinks	
C1000-24T-4X-L	24x 10/100/1000 Ethernet ports, 4x 10G SFP+ uplinks

Product number	Description
C1000-24P-4X-L	24x 10/100/1000 Ethernet PoE+ ports and 195W PoE budget, 4x 10G SFP+ uplinks
C1000-24FP-4X-L	24x 10/100/1000 Ethernet PoE+ ports and 370W PoE budget, 4x 10G SFP+ uplinks
C1000-48T-4X-L	48x 10/100/1000 Ethernet ports, 4x 10G SFP+ uplinks
C1000-48P-4X-L	48x 10/100/1000 Ethernet PoE+ ports and 370W PoE budget, 4x 10G SFP+ uplinks
C1000-48FP-4X-L	48x 10/100/1000 Ethernet PoE+ ports and 740W PoE budget, 4x 10G SFP+ uplinks

Optics compatibility information

The Cisco Catalyst 1000 Series Switches support a wide range of optics. Because the list of supported optics is updated on a regular basis, consult the Optics Compatibility tables for compatibility information.

Cisco Capital

Flexible payment solutions to help you achieve your objectives

Cisco Capital makes it easier to get the right technology to achieve your objectives, enable business transformation and help you stay competitive. We can help you reduce the total cost of ownership, conserve capital, and accelerate growth. In more than 100 countries, our flexible payment solutions can help you acquire hardware, software, services and complementary third-party equipment in easy, predictable payments. Learn more.

Contact Cisco

For more information about Cisco products, contact:

Phone: +1 800 553-NETS (6387).

Worldwide Product Support.

Company website: cisco.com.

PMCL600 Series Full High-Definition LED Monitors

WALL MOUNT 32-INCH, 43-INCH, 50-INCH, AND 55-INCH MONITORS

Product Features

- Full High Definition 1920 x 1080 Resolution
- HDMI Digital Plus VGA, BNC Analog Inputs
- OSD Menu Selection of 16:9 Widescreen or 4:3 SD Aspect Ratio
- Bright LED Illuminated Panel with Ultra Wide (178°) Viewing Angle
- Built-in Stereo Speakers (8-inch x 2-inch) and Audio Amplifier
- Standard 400 x 200 mm VESA Mounting
- Power Cord and VGA Cables Included
- Auto-on when VGA or HDMI DVR/NVR Video is Detected
- On-Screen Display (OSD) Languages: English, Spanish, German, French, Italian, and Chinese (simplified)
- 3-Year Warranty

PMCL632, PMCL643, PMCL650, & PMCL655

Pelco's **PMCL600 Series** monitors combine the latest technologies into a perfect complement to your investment in megapixel imaging and performance. Wall mount full high-definition (FHD) monitors deliver 1920 x 1080 resolution and are specifically engineered to exceed the demands of surveillance operators.

High-definition displays adapt to the changing nature of security in control room design and efficiency. Pelco FHD monitors are an integral component of the modern control room, allowing you to customize and deliver the most efficient video configuration for your installation.

Individual monitors, as well as entire walls, can be configured to meet your security needs. Also, multiple video streams can be arranged on a single monitor to significantly reduce your installation's power requirements. Pelco's energy-conscious FHD displays use low-power components to meet regulatory compliance.

FHD monitors deliver optimal performance and the truest color reproduction available while retaining compatibility with Pelco and third-party megapixel cameras. The result is superior clarity and image recognition. When used with other, lower resolution camera systems, Pelco FHD displays can seamlessly scale down to 720p. This feature guarantees crisp, detailed images from all cameras.

FHD monitors have been designed to meet the global demands of complex security installations. Stringent testing of FHD monitor components ensures that around-the-clock, day-in and day-out operation does not degrade the image quality, but consistently maintains the superior performance that surveillance operators require.

TECHNICAL SPECIFICATIONS

GENERAL

Parameter	PMCL632 32-Inch	PMCL643 43-Inch	PMCL650 50-Inch	PMCL655 55-Inch
Viewing Area	698 mm x 392.85 mm	953 mm x 543mm	1095.84 mm x 616.41 mm	1209.6 mm x 680.4 mm
Number of Pixels	1920 (H) x 1080 (V)	1920 (H) x 1080 (V)	1920 (H) x 1080 (V)	1920 (H) x 1080 (V)
Pixel Pitch	0.36 (H) mm x 0.36 (V) mm	0.49 (H) mm x 0.49 (V) mm	0.19 (H) mm x 0.57 (V) mm	0.21 (H) mm x 0.63 (V) mm
Brightness	300 cd/m² (typical)	300 cd/m² (typical)	350 cd/m² (typical)	350 cd/m² (typical)
Contrast Ratio	3000:1	1200:1	3000:1	3000:1
Power Consumption	<55 W	<80 W	<100 W	<120 W
Dimensions (without stand)	743.95 x 443.40 x 58.70 mm (29.29 x 17.46 x 2.31 in)	979.18 x 581.42 x 63.4 mm (38.55 x 22.89 x 2.50 in)	1135 x 666.4 x 64.2 mm (44.69 x 26.24 x 2.53 in)	1249.6 x 733.9 x 59.67 mm (49.17 x 28.89 x 2.35 in)
Weight Unit Shipping	 8.80 kg (19.4 lb) 10.8 kg (23.8 lb)	 22.0 kg (48.5 lb) 27.0 kg (59.2 lb)	 24.0 kg (52.9 lb) 30.0 kg (66.1 lb)	 30.0 kg (66.1 lb) 35.0 kg (77.2 lb)
Speakers	8 ohm 3 W/channel	8 ohm 5 W/channel	8 ohm 5 W/channel	8 ohm 5 W/channel
Included Mount	Desk Stand	Wall Mount	Wall Mount	Wall Mount

Backlight Type	LED
Refresh Rate	60, 70, 75 Hz (depending on resolution)
Viewing Angle (H/V)	178°/178°
Response Time	6.5 ms
Maximum Resolution	1920 x 1080 at 60 Hz
Optimum Resolution	

Interface	Resolution	Refresh Rate
HDMI	1920 x 1080	60 Hz
	1280 x 1024	60 Hz/70 Hz/75 Hz
	1024 x 768	60 Hz
	800 x 600	60 Hz
	640 x 480	60 Hz
VGA	1920 x 1080	60 Hz
	1280 x 1024	60 Hz/75 Hz
	1024 x 768	60 Hz
	800 x 600	60 Hz
	640 x 480	60 Hz

Monitor Aspect Ratio	16:9 or 4:3
Video Formats	480p, 1080i, 1080p
Panel Life	40,000 hours
Display Colors	16.7 million
Front Panel Controls	Power, left/right, up/down, menu, input
Indicators	LED (power on/off)
VESA® Mounting Compliance	400 x 200 mm

ELECTRICAL

Input Voltage	100 to 240 VAC, 50/60 Hz
Input Interfaces	
Video Input	BNC, HDMI (2), VGA
Video Output	BNC
Additional Inputs	USB, RS-232
Audio	3.5 mm stereo jack
Horizontal Frequency	15 kHz to 75 kHz
Vertical Frequency	25 Hz to 75 Hz
Sync Format	NTSC/PAL

ENVIRONMENTAL

Operating Temperature	0° to 40°C (32° to 104°F)
Storage Temperature	–20° to 60°C (–4° to 140°F)
Operating Humidity	10% to 85%, noncondensing
Storage Humidity	10% to 85%, noncondensing

MODEL

PMCL632*	32-inch monitor (81 cm)
PMCL643	43-inch monitor (109.2 cm)
PMCL650	50-inch monitor (127 cm)
PMCL655	55-inch monitor (139.7 cm)

*A desk stand is included with the 32-inch model. No stands or mounts are included with any of the other monitors.

RECOMMENDED ACCESSORIES

PMCLNBWMF	Flat Wall Mount
PMCLNBWMT	Tilt Wall Mount
PMCLNBWMS	Swing Out Arm Wall Mount

CERTIFICATIONS

CE, Class B
FCC, Class B
ICES-003, Class B
UL/cUL Listed

VALUES IN PARENTHESES ARE INCHES; ALL OTHERS ARE CENTIMETERS.

PMCL632

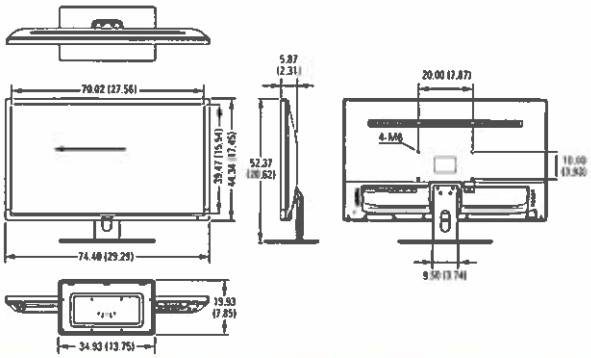

PMCL643

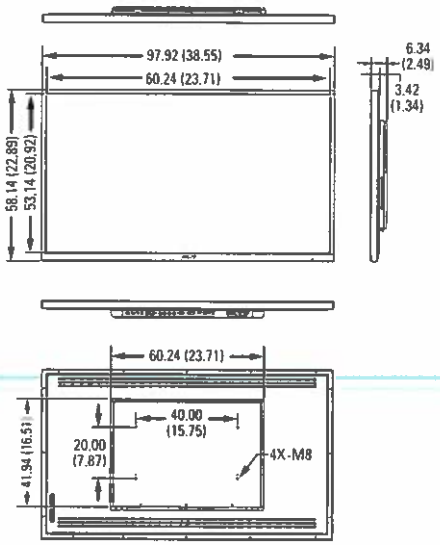

PMCL650

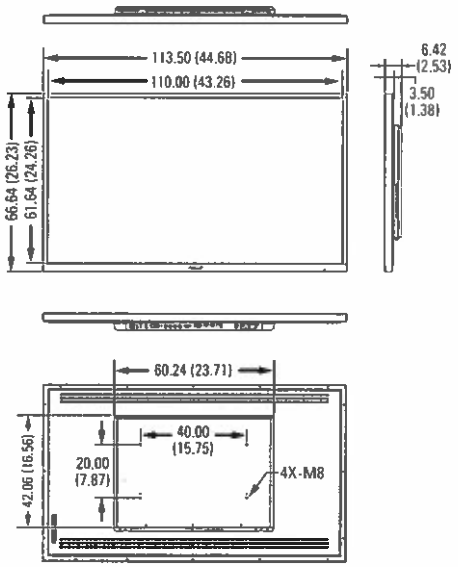

PMCL655

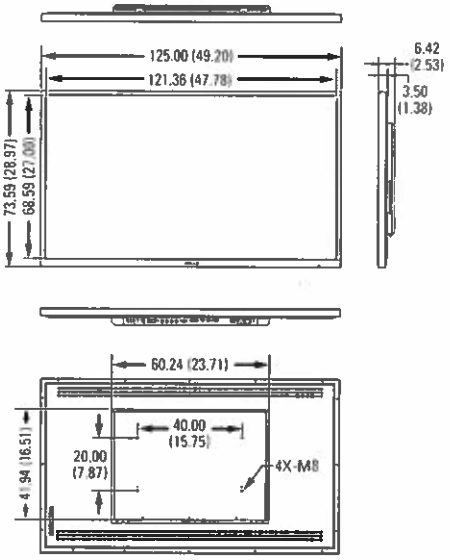

⚠**WARNING:** Cancer and Reproductive Harm - www.P65Warnings.ca.gov.
⚠**ADVERTENCIA:** Cáncer y Daño Reproductivo - www.P65Warnings.ca.gov.
⚠**AVERTISSEMENT:** Cancer et Troubles de l'appareil reproducteur - www.P65Warnings.ca.gov.

Pelco, Inc.
625 W. Alluvial Ave., Fresno, California 93711 United States
USA & Canada Tel (800) 289-9100 Fax (800) 289-9150
International Tel +1 (559) 292-1981 Fax +1 (559) 348-1120
www.pelco.com

WALL MOUNT FULL HIGH-DEFINITION LCD MONITORS

TECHNICAL SPECIFICATIONS **SECURITY SYSTEM**
DIVISION – LEVEL 1___ 28 ELECTRONIC SAFETY AND SECURITY
LEVEL 2___28 20 00 ELECTRONIC SURVEILLANCE
LEVEL 3___28 23 00 VIDEO SURVEILLANCE
LEVEL 3__28 23 29 VIDEO SURVEILLANCE AND MONITORING/SUPERVISORY INTERFACES

1 GENERAL

A. Equipment and materials used shall be standard components that are manufactured and available for purchase as standard replacement parts as long as the product is commercially available from the manufacturer.

B. All manufactured products shall be thoroughly tested and proven in actual use.

C. All manufactured products shall include, at no additional cost, online support services and availability of a toll-free (U.S. and Canada), 24-hour technical assistance program (TAP) for emergencies.

D. The manufacturer shall repair or replace without charge, manufactured products proven defective in material or workmanship for the stated warranty period from the date of shipment.

2 PRODUCTS

2.1 WALL MOUNT LCD MONITORS

A. The high-definition desktop LCD monitors shall offer VGA, HDMI, and BNC inputs.

B. The high-definition desktop LCD monitors shall be capable of providing a maximum of 1920 x 1080p resolution.

C. The high-definition desktop LCD monitors shall meet or exceed the following design and performance specifications.

1. General Specifications
   a. Dimensions
      1. 32-inch monitor 743.95 x 443.40 x 58.70 mm (29.29 x 17.46 x 2.31 in)
      2. 43-inch monitor 979.18 x 581.42 x 63.4 mm (38.55 x 22.89 x 2.50 in)
      3. 50-inch monitor 1135 x 666.4 x 64.2 mm (44.69 x 26.24 x 2.53 in)
      4. 55-inch monitor 1249.6 x 733.9 x 59.67 mm (49.17 x 28.89 x 2.35 in)
   b. Unit Weight
      1. 32-inch monitor 8.80 kg (19.4 lb)
      2. 43-inch monitor 22.0 kg (48.5 lb)
      3. 50-inch monitor 24.0 kg (52.9 lb)
      4. 55-inch monitor 30.0 kg (66.1 lb)
2. Electrical Specifications
   a. Power Consumption
      1. 32-inch monitor <55 W
      2. 43-inch monitor <80 W
      3. 50-inch monitor <100 W
      4. 55-inch monitor <120 W

b. Input Voltage	100 to 240 VAC, 50/60 Hz
c. Video Interfaces	
1. Video Input	BNC In/Out; 1 VGA; 2 HDMI
2. Other Inputs	USB, RS232
3. Audio	3.5 mm audio jack
d. Horizontal Frequency	15 kHz to 75 kHz
e. Vertical Frequency	25 Hz to 75 Hz
f. Sync Format	NTSC/PAL

3. Environmental Specifications

a. Operating Temperature	0° to 40°C (32° to 104°F)
b. Operating Humidity	10% to 85%, noncondensing

4. Mechanical Specifications

a. Viewing Area	
1. 32-inch monitor	698.4 mm x 392.85 mm
2. 43-inch monitor	953 mm x 543 mm
3. 50-inch monitor	1095.84 mm x 616.41 mm
4. 55-inch monitor	1209.6 mm x 680.4 mm
b. Number of Pixels	1920 (H) x 1080 (V)
c. Pixel Pitch	
1. 32-inch monitor	0.36 mm x 0.36 mm
2. 43-inch monitor	0.49 mm x 0.49 mm
3. 50-inch monitor	0.1903 mm x 0.5708 mm
4. 55-inch monitor	0.21 mm x 0.63 mm
d. Brightness	300 cd/m² (32-inch and 43-inch) 350 cd/m² (50-inch and 55-inch)
e. Contrast Ratio	1200:1 (43-inch) 3000:1 (32-inch, 50-inch, 55-inch)
f. Backlight Type	LED
g. Refresh Rate	60, 70, 75 Hz (depending on resolution)
h. Viewing Angle (H/V)	178°/178°
i. Response Time	6.5 ms
j. Native Resolution	1920 x 1080 at 60 Hz
k. Optimum Resolution	
1. VGA	1920 x 1080 at 60 Hz; 1280 x 1024 at 60/75 Hz 1024 x 768 at 60 Hz 800 x 600 at 60 Hz 640 x 480 at 60 Hz
2. HDMI	1920 x 1080 at 60 Hz 1280 x 1080 at 60/70/75 Hz 1024 x 768 at 60 Hz 800 x 600 at 60 Hz 640 x 480 at 60 Hz
l. Panel Aspect Ratio	16:9 or 4:3
m. Video Formats	480p, 1080i, 1080p
n. Panel Life	40,000 hours
o. Display Colors	16.7 million
p. Speakers	8 ohm 5 W/channel
q. Front Panel Controls	Power, left/right, up/down, menu, input
r. Indicators	LED (power on/off)
s. VESA® Mounting Compliance	400 mm x 200 mm

5. Certifications
   a. CE, Class B
   b. FCC, Class B

c. ICES-003, Class B
d. UL/cUL Listed

D. Warranty
1. 36 months, parts and labor

E. Pelco Model Numbers

1.	PMCL632	32-inch monitor
2.	PMCL643	43-inch monitor
3.	PMCL650	50-inch monitor
4.	PMCL655	55-inch monitor

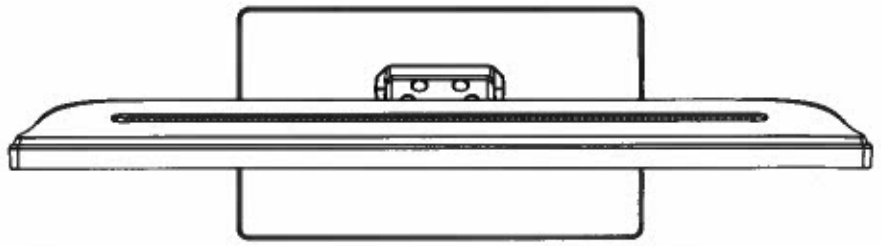

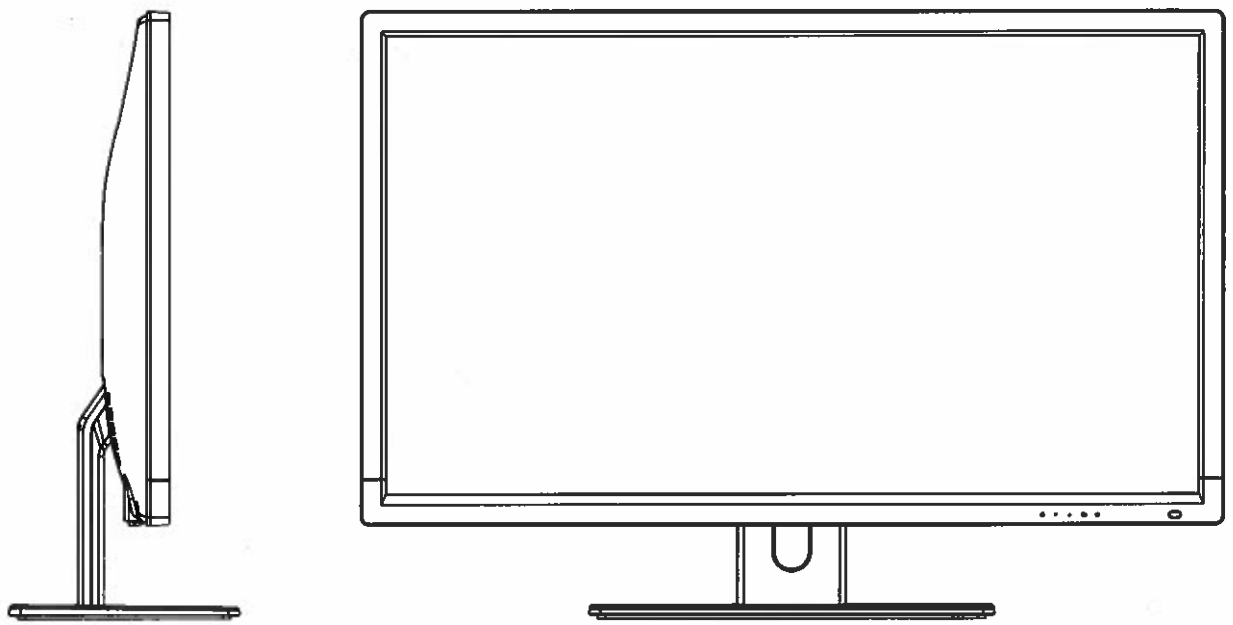

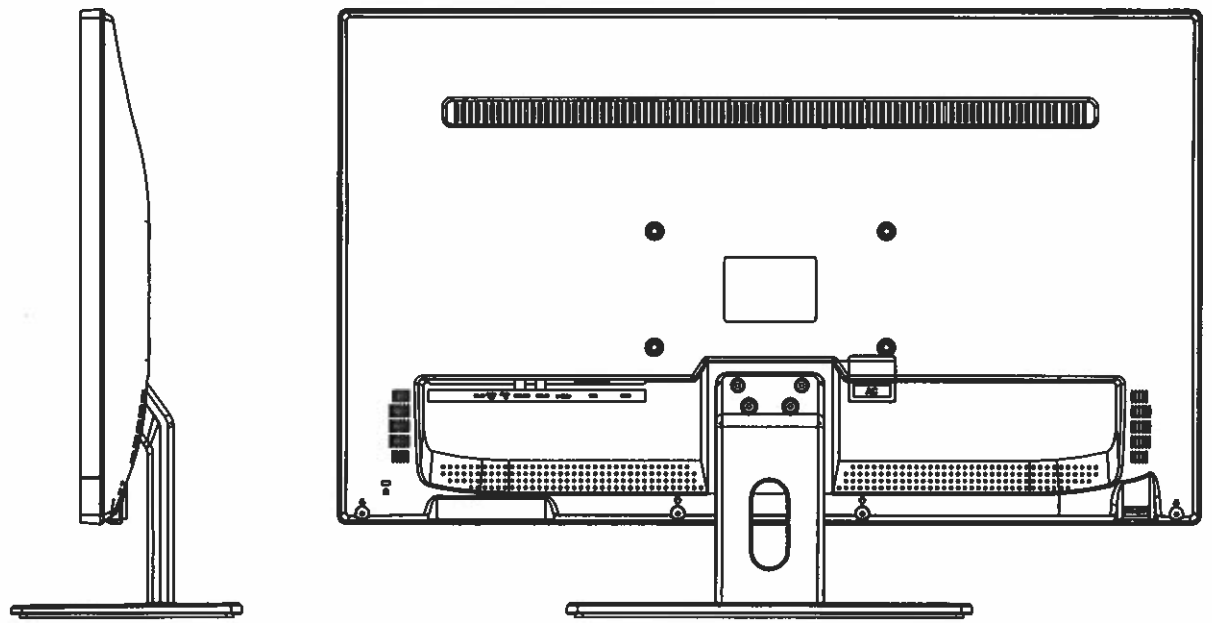

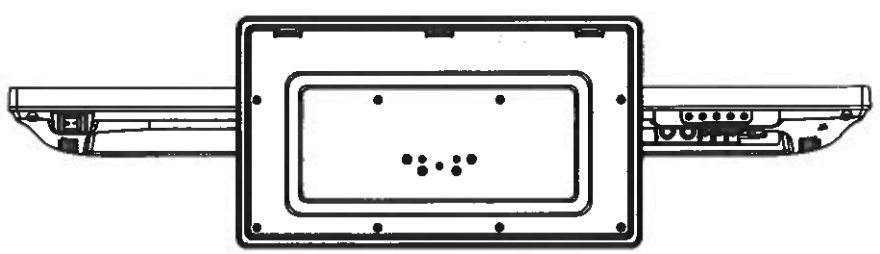

DIVAR network 5000 recorder

www.boschsecurity.com

BOSCH
Invented for life

- 32 IP channels with 320 Mbps incoming bandwidth
- 12 MP IP camera support for view and playback
- Real time live display for 16 channels @1080p or 4 channels @4k
- Extended rack-mount unit with advanced connections
- Separate internet and IP camera networks

Connect this recorder to a maximum of 32 IP cameras that use the latest H265/H264 high-resolution video technology and state-of-the-art compression techniques.
These advanced technologies, coupled with efficient network data transmission, deliver the high security and reliability required for modern surveillance systems. Simultaneous remote or local monitoring, recording, archive and playback functions are guided by simple menu selections and operator commands.
The recorders can be installed with a maximum of 4 internal HDDs for video storage. Another option is two HDDs for storage, plus a DVD burner for video export.
Use the recorder as a desktop model or in a standard rack mount.

Functions

Latest video compression technology
The DIVAR supports H.264 and H.265 video compression technology. This technology dramatically reduces bandwidth and storage requirements while still delivering superb image and audio quality.
Equipped with this newest video technology, DIVAR gives you the full benefits of the latest high-resolution cameras. The proof is in the pixels.

Camera IP support
The recorder supports native camera integration with Bosch IP cameras which provides easy installation, configuration and maintenance options. This allows plug-and-play connectivity as the installer can connect and configure the cameras to the recorder without having to open every camera individually on a web client. For further configuration 3rd party cameras are supported through the ONVIF Profile S protocol.

Simultaneous record and view
The DIVAR records multiple video and audio signals while simultaneously providing live multi-screen viewing and playback. Comprehensive search and playback functions provide quick recall and viewing of recorded video.
The DIVAR has a real-time display resolution of 1080p for 16 channels simultaneously, or 4K for 4 channels.

PoE+ switch
The recorders with a built-in PoE+ switch can supply power to a maximum of 16 connected cameras. Each camera automatically receives its IP address from the recorder for simple plug-and-play operation.

Simple operation
The DIVAR is very easy to install and use. Simply connect the cameras, apply power, and follow the simple Install Wizard steps for initial setup. The unit can then record automatically with no further intervention required.

DDNS
Bosch offers its customers free Dynamic Domain Name Services (DDNS) for access to network-connected devices via a "friendly" hostname without the need for costly static IP addresses. This makes it easier for uninterrupted access to important video from devices regardless of their location.

Alarms
All models have extensive alarm handling functions and telemetry control. Alarm functions include local inputs and relay outputs, plus motion detection in user-defined areas. If an alarm is detected, the DIVAR can:

- send an e-mail notification and/or FTP push
- sound a buzzer and/or display a warning
- activate local alarm output

Local control
The unit can be easily operated and programmed via the on-screen display menu system using:

- the supplied mouse
- the front panel control keys
- the supplied remote control
- push notification

Inputs and outputs
Video inputs, audio inputs/output, and alarm inputs/outputs are located on the rear panel.
Two video connectors (VGA/HDMI) provide simultaneous output for monitor A for live display (with zoom) and playback (display can be frozen and zoomed). The displays allow full-screen, multi-screen, and sequenced viewing.
A second HDMI connection provides custom camera views for a monitor B.

Network control
Use the PC software or built-in web application via a network for live viewing, playback, and configuration.

Watermark
The DIVAR includes an authenticity check for both local and remote archives, ensuring recording integrity. An Archive Player is provided for playback of secure video files and to check if video is authentic.

Smartphone App
A DIVAR Viewer App from Bosch for iOS and Android devices is available for:

- live and playback viewing
- recorder configuration
- PTZ control

This means you can watch live video from cameras connected to the DVR from anywhere in the world. You can also control focus, pan, tilt and zoom on PTZ-enabled cameras.

Furthermore, the smartphone App supports remote push notifications. In this way you are automatically notified if an alarm occurs on the device and can take immediate action, even if you are not actively monitoring the system at that moment.

Dome control
The DIVAR can control pan/tilt/zoom (PTZ) equipment using commands sent via IP connection. It also supports Focus, Iris and Aux commands for Bosch cameras.

Panoramic cameras
The DIVAR supports dewarping of Bosch panoramic cameras. The following modes are supported: pan/tilt/zoom (PTZ), panoramic, corridor and quad. Dewarping in the camera can also be selected if the connected IP panoramic camera supports this.

Intuikey keyboard
One Bosch Intuikey keyboard can be connected to this unit to control dome cameras.

RAID software
Units installed with 2 HDDs can support RAID 1 software for mirroring drives. Units installed with 4 HDDs can support RAID 5 software.
Using RAID has a large impact on the system performance. To keep the playback smooth, Bosch recommends to limit the playback to 4 channels.

Certifications and approvals

Standards	
Alarm	EN 50130-5:2011, Alarm systems - Part 5: Environmental test methods, Class I, Fixed equipment
Lightning protection	To ALL long input / output - and supply-wiring. Alarm inputs and relay output, Video inputs and Outputs, dome-control outputs, power-cable, Audio In/Out. ± 0.5, 1kV line to line, ± 0.5, 1 and 2kV line to earth

EMC + Safety - Europe	
EU Directives	2014/35/EU (LVD), 2014/30/EU (EMC), 2011/65/EU (RoHS)
EMC Emission	EN 55032:2012/AC2013, class B
EMC Immunity	EN 50130-4:2011/A1:2014
EMC mains Harmonics	EN 61000-3-2:2014
EMC Mains fluctuations	EN 61000-3-3:2013
LVD Safety	CB scheme + IEC/EN/UL 62368-1:2014/AC:2015
RoHS	EN 50581:2012

EMC + Safety - USA and Canada	
EMC USA	47CFR part 15 (FCC), Class B
Safety USA (UL, cUL)	UL 62368-1, Edition 2, Dec 1, 2014
Safety Canada	CAN/CSA-C22.2 No. 62368-1
India	
BIS (Bureau of Indian Standards)	BIS registration for external Power adapter (comes / packed with the main product)
Australia	
ACMA EMC	RCM logo on product label

Region	Regulatory compliance/quality marks	
Australia	RCM	DOC SAL Variants
	RCM	DOC SAL
Europe	CE	ST-VS 2016-E-087
USA	UL	FCC & UL
	FCC	ST-VS 2016-E-088

Installation/configuration notes

DIVAR 5000 network back panel (no PoE)

	RJ45 video input for max. 32 IP cameras connected via external switch (optional with DHCP configuration)
	RJ45 Ethernet connection (10/100/1000Base-T according to IEEE802.3)
VGA MON.A	1 D-SUB (Monitor output)
HDMI MON.A1	1 HDMI (Monitor output in maximum 4k resolution)
HDMI MON.A2	1 HDMI (output for spot monitor that supports live multiscreen)
ALARM IN	16 screw terminal inputs, cable diameter AWG26-16 (0.4–1.29 mm)
ALARM OUT	6 screw terminal outputs, cable diameter AWG26-16 (0.4–1.29 mm)

KEYBOARD	Screw terminals, cable diameter AWG26-16 (0.4–1.29 mm)
AUDIO OUT	1 RCA (Audio output)
MIC IN	1 RCA (Audio input)
RS-232	DB9 male, 9 pin D-type (for service)
	Two USB (3.0) connectors for mouse or USB memory device; one USB (2.0) also on front panel
eSATA	For backup/memory device
Power input with On/Off switch	100–240 VAC, 50-60 Hz, 1.9 A, 75 W
	Ground connection

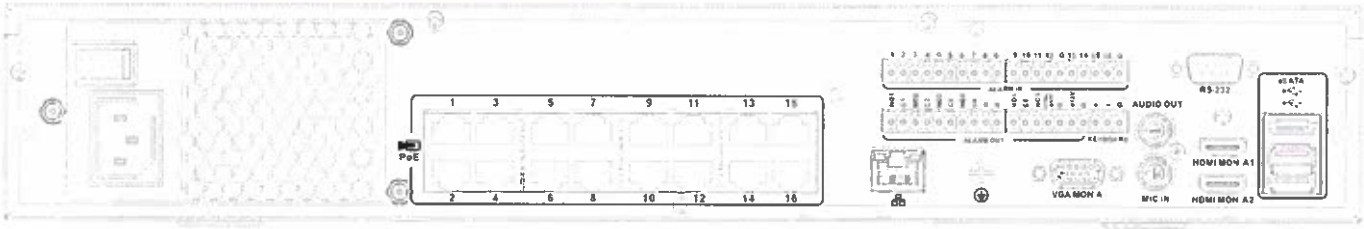

DIVAR 5000 network back panel (16 PoE)

PoE	16 RJ45 ports (200 W; max. 25.5 W per port) for connecting max. 16 PoE cameras connected with DHCP configuration (max. 32 IP cameras)

	RJ45 Ethernet connection (10/100/1000Base-T according to IEEE802.3)
VGA MON.A	1 D-SUB (Monitor output)
HDMI MON.A1	1 HDMI (Monitor output in maximum 4k resolution)
HDMI MON.A2	1 HDMI (output for spot monitor that supports live multiscreen)
ALARM IN	16 screw terminal inputs, cable diameter AWG26-16 (0.4–1.29 mm)
ALARM OUT	6 screw terminal outputs, cable diameter AWG26-16 (0.4–1.29 mm)
KEYBOARD	Screw terminals, cable diameter AWG26-16 (0.4–1.29 mm)
AUDIO OUT	1 RCA (Audio output)
MIC IN	1 RCA (Audio input)
RS-232	DB9 male, 9-pin D-type
	Two USB (3.0) connectors for mouse or USB memory device; one USB (2.0) also on front panel
eSATA	For backup/memory device
Power input with On/Off switch	100~240 VAC, 50-60 Hz, 5 A, 350 W
	Ground connection

Technical specifications

Power	
AC input (without PoE)	100-240 VAC; 50-60 Hz; 1.9 A
AC input (with PoE)	100-240 VAC; 50-60 Hz; 5 A
RTC battery on main PCB	Lithium CR2032, 3 VDC
Maximum main power consumption (no HDD)	8.7 W without PoE 15.2 W with PoE
Maximum power consumption of PoE+ switch	185 W
Maximum power consumption (per PoE+ port)	25.5 W
Mechanical	
Dimensions (WxDxH)	440 x 408 x 76 mm (17.3 x 16.1 x 3.0 in)
Weight without PoE (excluding HDDs and DVD)	6.27 kg (13.8 lb) approx.
Weight with PoE switch (excluding HDDs and DVD)	6.37 kg (14.0 lb) approx.
Environmental	
Operating temperature (incl. HDD(s) and DVD)	+0°C to +40°C (+32°F to +104°F)
Storage temperature	-40°C to +70°C (-40°F to +158°F)
Operating humidity	<93% non-condensing
Storage humidity	<95% non-condensing
Video storage	
Internal (option)	Max. 4 SATA HDD or 2 SATA HDD + 1 DVD (R/RW) Max. capacity per HDD: 6 TB Max. supported speed per HDD: 6 Gb/s
External (option)	eSATA-connected storage device
Alarms and detections	
Motion detection set by camera	Essential or Intelligent Video Analytics (IVA), Motion +
Alarm activations	Video loss, motion detection, input alarm, system alarm
Events triggered by alarm	Recording, PTZ movement, alarm out, email, buzzer, screen message, Mon A and B activated, mobile push notification
Inputs	16 inputs configurable NO/NC, max. input voltage 12 VDC +/-10%
Outputs	5 relay outputs, 1 open collector
Relay contact	Max. rated, 30 VDC, 2 A continuous or 125 VAC, 1 A (activated)
Exporting	
DVD (optional)	Built-in DVD+R/RW writer
USB	Flash memory or external HDD (FAT32)
Network	Web Client software or Video Client
eSATA	External drive
Playback	
Multi-channel	Simultaneous 1/4/9/16 channels
Mode	Forward, reverse, slow play, fast play, frame-by-frame

Playback	
Search	Time, channel, type, smart
Network	Video Client, Web client, App
Restrict	Restrict video by user rights for viewing
Protection	Protect video against overwriting
Retention time	Automatically delete recordings after 1 to 365 days

Recording	
Decoding compression	H.265/H.264/MJPEG
Speed	Max. 60 IPS per channel, configurable
Bit rate	16 kbps to 24 Mbps per channel
Record interval	1~120 min (default: 60 min), Pre-record: 1~30 sec, Post-record: 10~300 sec
Mode	Manual, Scheduled (regular, motion detection, alarm), Stop
Resolution IP camera	12MP, 8MP, 6MP, 5MP, 3MP, 1.3MP, 1080p, 720p

Network control	
Ethernet	RJ45 port (10/100/1000 Mbps)
PC software	Video Client, Web client
APPs	iPhone, Android
User access	Maximum 128 users. Bosch advises a maximum of 4 simultaneous connections. More connections can cause performance limitations.
Protocols	HTTP, HTTPS, TCP/IP, IPv4/IPv6, UPnP, RTSP, UDP, SMTP, NTP, DHCP, DNS/DDNS, IP Filter, PPPoE, FTP

Video performance	
Maximum IP camera channels	32
Maximum incoming bandwidth	320 Mbps
Maximum recording bandwidth	320 Mbps
Maximum transmission bandwidth	320 Mbps

Display	
Resolution	3840×2160, 1920×1080, 1280×1024, 1280×720, 1024×768
OSD	Camera title, Time, Video loss, Motion detection, Recording, PTZ

Audio	
MIC Input	1 channel (via RCA) 200 to 3000 mV, 10 kOhm
Output	1 channel (via RCA) 200 to 3000 mV, 5 kOhm
Direction	Bidirectional (audio input and output connected via device)

Ordering information

DRN-5532-400N00 Recorder 32ch, 1.5U, no HDD
High-resolution recorder for network surveillance systems.
Recorder 32ch 1.5U w/o HDD
Order number **DRN-5532-400N00**

EWE-DIP5BS-IW 12mths wrty ext DIVAR 5000 w/out HDD
12 months warranty extension
Order number **EWE-DIP5BS-IW**

DRN-5532-400N16 Recorder 32ch, 16PoE, 1.5U, no HDD
High-resolution recorder for network surveillance systems.
32 IP camera channels
16-port PoE switch
Order number **DRN-5532-400N16**

EWE-DIP5BS-IW 12mths wrty ext DIVAR 5000 w/out HDD
12 months warranty extension
Order number **EWE-DIP5BS-IW**

DRN-5532-414N00 Recorder 32ch 1.5U 1x4TB
High-resolution recorder for network surveillance systems.
32 IP camera channels
1 HDD (4 TB)
Order number **DRN-5532-414N00**

DRN-5532-214D00 Recorder 32ch 1.5U 1x4TB DVD
High-resolution recorder for network surveillance systems.
32 IP camera channels
1 HDD (4 TB); 1 DVD
Order number **DRN-5532-214D00**

DRN-5532-414N16 Recorder 32ch 1.5U 1x4TB 16PoE
High-resolution recorder for network surveillance systems.
32 IP camera channels
16-port PoE switch
1 HDD (4 TB)
Order number **DRN-5532-414N16**

DRN-5532-214D16 Recorder 32ch 1.5U 1x4TB 16PoE DVD
High-resolution recorder for network surveillance systems.
32 IP camera channels
16-port PoE switch
1 HDD (4 TB); 1 DVD
Order number **DRN-5532-214D16**

Accessories

DVR-XS200-A HDD expansion 2TB
Storage expansion kit. 2 TB
Order number **DVR-XS200-A**

DVR-XS300-A HDD expansion 3TB
Storage expansion kit. 3 TB
Order number **DVR-XS300-A**

DVR-XS400-A HDD expansion 4TB
Storage expansion kit. 4 TB
Order number **DVR-XS400-A**

DVR-XS600-A HDD expansion 6TB
Storage expansion kit. 6 TB
Order number **DVR-XS600-A**

DVR-XS-DVD-B DVD writer expansion B
DVD writer Expansion kit B
Order number **DVR-XS-DVD-B**

Represented by:

Europe, Middle East, Africa:
Bosch Security Systems B.V.
P.O. Box 80002
5600 JB Eindhoven, The Netherlands
Phone: + 31 40 2577 284
emea.securitysystems@bosch.com
emea.boschsecurity.com

Germany:
Bosch Sicherheitssysteme GmbH
Robert-Bosch-Ring 5
85630 Grasbrunn
Germany
www.boschsecurity.com

North America:
Bosch Security Systems, LLC
130 Perinton Parkway
Fairport, New York, 14450, USA
Phone: +1 800 289 0096
Fax: +1 585 223 9180
onlinehelp@us.bosch.com
www.boschsecurity.us

Asia-Pacific:
Robert Bosch (SEA) Pte Ltd, Security Systems
11 Bishan Street 21
Singapore 573943
Phone: +65 6571 2808
Fax: +65 6571 2699
apr.securitysystems@bosch.com
www.boschsecurity.asia

22796846603 | en, V16, 10. Jul 2020

"The Imperial" 32ch NVR - IMP32

Dual LAN NVR with RAID

- Supports up to 32 cameras
- 320Mbps Incoming Bitrate
- Dual Gigabit Ethernet
- Dual HDMI Output
- eSata Interface
- USB & Network Backup
- Remote View Capable
- 3 Year Warranty

Audio/Video Input	
Video Input	Up to 32 IP Cameras
Total Bitrate	320Mbps Incoming 320Mbps Outgoing
Recording Resolution	Up to 4K
Frame Rate	Up to 60FPS
Video Compression	H.264/H.265
Audio	Up to 32 through IP Cameras
Audio/Video Output	
HDMI Outputs	1 HDMI @ 4K - 1 HDMI @ 1080p
Audio Output	1 RCA Output
Hard Drive	
SATA	8 SATA Interface
eSata	1 eSata
Capacity	Up to 10TB each disk
RAID	Supported - RAID 0, 1, 5, 6, 10
External Interface	
Network	Dual Gigabit Ethernet - Multi-address Capable
USB Interface	2 x USB 2.0 and 1 x USB 3.0
Alarm In/Out	16 in / 4 out
General	
Power Supply	100 ~ 240 VAC
Temperature/Humidity	14F - 131F @ 10%-90% Humidity
Chassis	19-inch rack-mounted 3U chassis
Dimensions	17.4" × 16.7"×3.4"
Weight	≤ 11 Lbs

For More Information Contact Security Camera Warehouse
Toll Free: 1.866.414.2553 • Fax 1.866.337.9542
Email sales@security-camera-warehouse.com
www.security-camera-warehouse.com

POE130-AT Single-Port IEEE802.3at Midspan

GIGABIT POWER OVER ETHERNET PLUS

Product Features

- Fully IEEE 802.3at Compliant
- Backward Compatible to IEEE 802.3af Applications
- Guaranteed Output Power of 30 W
- Supports 10/100/1000Base-T Data Rates
- Safe: Low Power Devices Receive Only the Power They Need
- Automatic Detection and Protection of Non-Standard Ethernet Terminals
- Small and Compact Design

The POE130-AT Power over Ethernet (PoE) single-port midspan is designed to meet the demanding data rate and power requirements of IP cameras with high-quality streaming video capabilities. The PoE+ single-port midspan offers total output power of 30 W, and meets the IEEE802.3at standard for detection, connection, disconnection, and fault protection.

The POE130-AT input voltage range is 90 to 264 VAC. Maximum input current is 1 A (RMS) at 100-240 VAC.

MODELS

Model	Description
POE130-ATUS	Single-port PoE+, 30 W midspan, with US power cord
POE130-ATEU	Single-port PoE+, 30 W midspan, with European power cord

ELECTRICAL

Input

Input Voltage Rating	90 to 264 VAC
AC Input Current	1 A (RMS) at 100 to 240 VAC
AC Input Frequency	50 to 60 Hz

Output

Output Voltage	55 VDC
Output Power	30 W
Isolation (HI-POT)	Primary to Secondary: 1,500 VAC for 1 minute, 10 mA
Insulation Resistance	Primary to Secondary: >10 Mohm at 500 VDC
Over Voltage/Current, Short Circuit Protection	The output is equipped with short-circuit protection and overload protection according to the IEEE802.3at specification

Connection

AC Input Connector	3-pin (C5)
Output Connection	
+pins	4, 5
–pins	7, 8
Data IN/OUT Connector	Shielded RJ-45, EIA 568A and 568B

FRONT PANEL INDICATORS/FUNCTIONS

Status LED Color	Description
Yellow	AC Power
Green	Channel Power

ENVIRONMENTAL

Operating Temperature	–10° to 40°C (14° to 104°F)
Storage Temperature	–20° to 70°C (–4° to 158°F)
Maximum Humidity	90% non-condensing

OPTIONAL ACCESSORIES

POE1XT	Single-Port PoE Gigabit Extender extends PoE 100 meters (328 feet) providing a single-port 802.3af output; refer to the POE1XT specification sheet for capabilities

CERTIFICATIONS

- CE, EN55022 Class B
- FCC, Part 15, Class B
- UL/cUL Listed

VALUES IN PARENTHESES ARE INCHES; ALL OTHERS ARE CENTIMETERS.

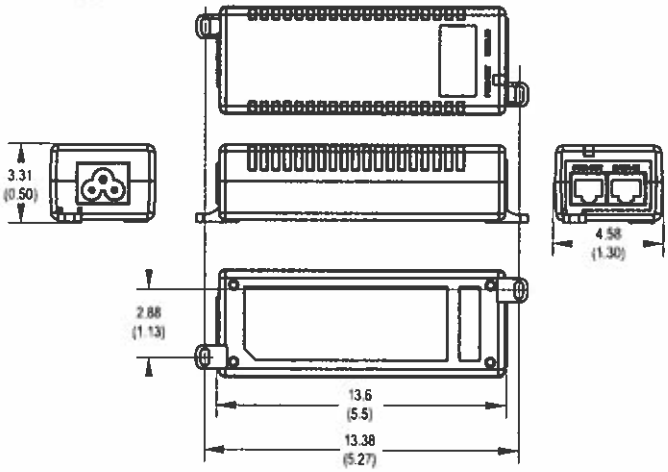

⚠ **WARNING:** Cancer and Reproductive Harm - www.P65Warnings.ca.gov.
⚠ **ADVERTENCIA:** Cáncer y Daño Reproductivo - www.P65Warnings.ca.gov.
⚠ **AVERTISSEMENT:** Cancer et Troubles de l'appareil reproducteur - www.P65Warnings.ca.gov

Pelco
625 W. Alluvial, Fresno, California 93711 United States
USA & Canada Tel (800) 289-9100 Fax (800) 289-9150
International Tel +1 (559) 292-1981 Fax +1 (559) 348-1120
www.pelco.com **www.pelco.com/community**

APPENDIX B

SECTION 282300 – VIDEO SURVEILLANCE

PART 1 - GENERAL

1.0 DESCRIPTION

A. Under this Item the Contractor shall furnish and provide and install equipment in locations indicated on the Plans.

1.1 RELATED DOCUMENTS

A. Drawings and general provisions of the Contract, including General and Supplementary Conditions and Division 01 Specification Sections, apply to this Section.

1.2 SUMMARY

A. Section includes a video surveillance system consisting of cameras and Wireless Data Transmission System.

1.3 DEFINITIONS

A. AGC: Automatic gain control.

B. BNC: Bayonet Neill-Concelman - type of connector.

C. CCD: Charge-coupled device.

D. FTP: File transfer protocol.

E. IP: Internet protocol.

F. LAN: Local area network.

G. MPEG: Moving picture experts group.

H. NTSC: National Television System Committee.

I. RAID: Redundant array of independent disks.

J. TCP: Transmission control protocol - connects hosts on the Internet.

K. WAN: Wide area network.

1.4 PERFORMANCE REQUIREMENTS

A. Seismic Performance: Video surveillance system shall withstand the effects of earthquake motions determined according to ASCE/SEI 7.

1. The term "withstand" means "the unit will remain in place without separation of any parts from the device when subjected to the seismic forces specified and the unit will be fully operational after the seismic event."

1.5 ACTION SUBMITTALS

A. Product Data: For each type of product indicated. Include dimensions and data on features, performance, electrical characteristics, ratings, and finishes.

B. Shop Drawings: For video surveillance. Include plans, elevations, sections, details, and attachments to other work.

1. Detail equipment assemblies and indicate dimensions, weights, loads, required clearances, method of field assembly, components, and location and size of each field connection.
2. Functional Block Diagram: Show single-line interconnections between components for signal transmission and control. Show cable types and sizes.
3. Dimensioned plan and elevations of equipment racks and cabinets, control panels, and consoles. Show access and workspace requirements.
4. Wiring Diagrams: For power, signal, and control wiring.

C. Equipment List: Include every piece of equipment by model number, manufacturer, serial number, location, and date of original installation. Add pretesting record of each piece of equipment, listing name of person testing, date of test, set points of adjustments, name and description of the view of preset positions, description of alarms, and description of unit output responses to an alarm.

1.6 INFORMATIONAL SUBMITTALS

A. Field quality-control reports.

B. Warranty: Sample of special warranty.

1.7 CLOSEOUT SUBMITTALS

A. Operation and Maintenance Data: For cameras, power supplies, all interconnecting equipment and products supplied by the Contractor and station components to include in emergency, operation, and maintenance manuals. In addition to items specified in Section 017823 "Operation and Maintenance Data," include the following:

1. Lists of spare parts and replacement components recommended to be stored at the site for ready access.

1.8 QUALITY ASSURANCE

A. Electrical Components, Devices, and Accessories: Listed and labeled as defined in NFPA 70, by a qualified testing agency, and marked for intended location and application.

B. Comply with NECA 1.

C. Comply with NFPA 70.

D. Electronic data exchange between video surveillance system with an access-control system shall comply with SIA TVAC.

1.9 PROJECT CONDITIONS

A. Environmental Conditions: Capable of withstanding the following environmental conditions without mechanical or electrical damage or degradation of operating capability:

1. Exterior Environment: System components installed in locations exposed to weather shall be rated for continuous operation in ambient temperatures of minus 4 to plus 122 deg F dry bulb and 20 to 90 percent relative humidity, condensing. Rate for continuous operation when exposed to rain as specified in NEMA 250, winds up to 85 mph (137 km/h) and snow cover up to 24 inches (610 mm) thick. Use NEMA 250, Type 4X enclosures.

1.10 WARRANTY

A. Special Warranty: Manufacturer's standard form in which manufacturer agrees to repair or replace components of cameras, equipment related to camera operation, and control-station equipment that fail in materials or workmanship within specified warranty period.

1. Warranty Period: Three years from date of Substantial Completion.

PART 2 - PRODUCTS

2.0 MATERIALS

A. Video Surveillance System as specified in Attachment A, or as approved equal.

B. Power Supplies

1. Low-voltage power supplies matched for voltage and current requirements of cameras and accessories, and of type as recommended by manufacturer of camera, infrared illuminator, and lens.

PART 3 - EXECUTION

3.1 PREPARATION

A. Verify that shop drawings and wiring diagrams have been provided.

B. Verify that interconnection diagrams have been provided and that all wiring between the various components have been provided. See 1.5A.1.d for further details.

C. Verify that all branch circuit wiring required for the operation of the system have been connected and are ready to be energized.

D. Level all cabinets and racks.

E. Remove all debris.

F. Label all cables and conductors. Label all terminals.

G. Provide “as built” point-to-point diagrams and spreadsheets.

3.2 SYSTEM ACTIVATION

A. The contractor shall retain the services of factory representatives (for a minimum of 10 days) to verify the installation of the various components before energizing the system.

B. On every camera perform a test on a portable monitor to determine that the viewed area is as required by the facility. Adjust the lenses to obtain the proper viewing.

C. Coordinate with college to provide all programming for the digital video management system and component switch to the satisfaction of the Owner. Contractor shall be responsible for field adjustments.

D. Make sure all wiring is tagged and labeled.

E. Lace and train all wiring to preserve a neat appearance.

F. Use Velcro type tie wraps to prevent crimping of conductors.

3.3 PERSONNEL TRAINING

A. The Contractor shall have the equipment manufacturer provide training on the complete CCTV System, including the overall operation and performance of the system; the responsibilities and procedures for operating and supervisory personnel, and the recognition of system problems. The training shall emphasize the interconnection of new cameras to the existing system.

B. Provide eight (16) hours of operator level training on site during each of three (3) shifts.

C. Provide eight (8) hours of supervisory level training on site in a single classroom session.

D. Video record training sessions and deliver three (3) copies of the DVD's to the facility.

3.4 MAINTENANCE MANUALS

A. The Contractor shall furnish three (3) copies of operating and maintenance instructions and illustrated parts books covering the equipment which will require operating instructions and periodic maintenance.

B. Provide a recommended list of spare parts and include in the maintenance manual.

C. Provide a unit price quotation for the items on the spare parts list and indicate the valid duration of the quote.

3.5 TESTING

A. The Contractor shall inspect and test the entire system after installation and retest in the presence of the Owner designated representative who will accept the system for Owner.

3.6 PRE-INSTALLATION CONSIDERATIONS

A. Coordinate installation location with all other trades and the Owner/Architect. All mounting locations shall be verified in the field with the Owner's Representative prior to final installation.

3.7 GENERAL

A. Survey the project site for conditions prior to installation. Inspect for seasonal and environmental conditions such as average, maximum, and minimum temperatures, fog, rain, snow, ice, humidity, condensing moisture, corrosion, salt water exposure, heat, cold, vibration, radio frequency interference, electrical discharge, AC induction, dust, smoke, animal or insect infestation, vegetation, decorations, marketing aids, hazardous or volatile atmospheres, vandalism, tampering, theft, etc. Survey outdoor camera locations when trees, shrubs, etc. are in full foliage.

B. Select equipment and components suitable for the physical and environmental conditions that the site may present.

3.8 DOCUMENTATION

A. Notify the owner and Owner's Representative (O/OR) prior to the installation or alteration of CCTV equipment or wiring.

B. Submit information regarding the system or system alterations, including Project Drawings and Specifications and battery calculations, if applicable.

C. Prior to requesting final approval of the installation, furnish a written statement that the system has been:

1. Installed in accordance with Specifications, and,
2. Tested in accordance with the manufacturer's specifications and appropriate NFPA requirements.

3.9 COMPATIBILITYAND INTEGRATION

A. Ensure that CCTV system components are compatible as a system. Ensure that the CCTV system is compatible with collateral systems when integrated into other systems.

B. Where integrated with other systems, arrange systems to function as a single system. Ensure that simultaneous operation of all system components does not degrade overall system operation and performance.

3.10 CAMERA SELECTION AND LOCATION (Cameras furnished by college – contractor to coordinate)

A. Coordinate selection of cameras and lenses with the manufacturer's representative based upon actual field connections at the time of installation. Select cameras and lenses considering depth of field and field of view. Consider how wide or how tall an object is in comparison to surroundings when related to recognition of that object on a system monitor. Two cameras may be required for a given application, one for an overall view, and another to view fine details

B. Ensure that camera selections and locations comply with manufacturer recommendations, drawings, and specifications, considering access for maintenance, repairs, and future replacement.

C. Use cameras and lenses with the appropriate level of resolution for the intended application.

D. Cameras, lenses, enclosures and accessories shall be selected that are physically compatible with the installed location and mounting methods, such as concealed locations or dome enclosures.

E. Optically corrected enclosures shall be provided. Typically, clear enclosures are used for outdoor locations and smoked enclosures are used indoors

3.11 GENERAL INSTALLATION

A. Install cameras, equipment, and accessories in accordance with manufacturer installation instructions and recommendations.

B. Ensure that components are fully compatible as a system, ensuring that equipment is compatible with wiring methods, system voltage, etc. Use equipment listed for the purpose for which it is used.

C. Integrate system components with support equipment and software into a fully operational, functional video control system.

D. Locate equipment and components so that accidental operation or failure is not caused by vibration or jarring.

E. Locate and install equipment and components in accessible locations for service personnel.

3.12 MOUNTING AND SUPPORTS

A. Mount and support equipment in accordance with manufacturer recommendations

B. Use anchoring devices that are approved for the mounting surface, and for the weight and wind loading, where applicable, of the equipment used.

C. Tighten mounting bolts and hardware snug to the mounting surface.

D. Use mounts and supports that provide for adequate support and do not inhibit camera operation or field of view.

E. Use parapet mounts that are designed to allow equipment to be swiveled in toward the roof for maintenance access.

F. Provide supports to structures for all ceiling mounted cameras.

G. Mount control units, power supplies and batteries vertically.

3.13 CAMERA INSTALLATION

A. Prior to installation, check the dimension of all camera housing assemblies to ensure that cameras, lenses, mounting brackets, heaters, where required, blowers, where required, washer/wiper assemblies, where required, and all other required components will fit into the housing.

B. Install cameras in locations that avoid a direct view of sources of light. Picture quality is degraded when a camera looks directly into a light source, or has a relatively high contrast between objects being viewed and the background scene.

C. Ensure that proposed camera locations afford the necessary field of view of the areas to be monitored.

D. Install spot filters for cameras with fixed lenses, where necessary. Install asymmetrical wide-angle lenses to correct for distortion.

3.14 EXTERNAL CAMERAS

A. Install external cameras such that icing, sunlight angles, extreme temperature, and wind loading do not affect their operation.

B. Use weather-tight housings were exposed to elements.

C. Install accessories for external conditions such as heaters, blowers, and defrosters or defoggers, as required.

D. Install CCTV equipment and components that are vandal and tamper resistant.

E. Install sun-shield or hoods to reduce glare when the sun is low on the horizon, or if the camera has a direct view of the sun, where applicable. Provide 10 Hoods as part of base contract.

3.15 CONTROL CABINET AND EQUIPMENT

A. Provide CCTV equipment, components, cameras, transmitters, receivers, matrix switchers, collectors, routers, monitors, pan/tilt/zoom controls, etc., in accordance with manufacturer recommendations.

B. Ensure that equipment is installed and connected to function as intended, designed, and manufactured.

C. Ensure that transmitters and receivers are capable of transmitting and receiving video, data, and control signals for pan/tilt/zoom controls, where applicable.

D. Provide 75-ohm terminations for all unused video amplifier outputs that are not source-terminated.

3.16 SOFTWARE

A. Coordinate the integration of the new camera with the existing system software.

3.17 POWER SUPPLIES

A. Connect power supplies for CCTV equipment to NEC compliant branch circuiting.

B. Provide and install listed power supplies with performance characteristics compatible with unique requirements of the equipment being supplied.

C. Size power supplies in accordance with manufacturer recommendations and with the application. Ensure that loads connected to power supplies do not exceed 80 percent of the power output rating of the power supply.

D. Provide individual fusing for each camera.

3.18 SITE CLEANUP

A. Upon completion of the work, remove excess debris, materials, equipment, apparatus, tool and the like and leave the premises clean, neat, and orderly.

3.19 FIELD ADJUSTMENT

A. Make field adjustments to cameras to improve the field of view of the area being monitored. For cameras monitoring doors, the top of the field of view should be the top of the door.

B. Set pan and tilt limits in accordance with manufacturer recommendations and as required for the Project.

C. Set camera back-focus such that cameras remain in focus while zooming all the way out or zooming all the way in.

D. As applicable, set all pan/tilt/zoom cameras to automatically adjust, using set points, to view the intended target, when the cameras call-up switching signal is generated.

E. Synchronize all cameras to prevent rolling when switching on each monitor. Adjust cameras to optimize the presentation at the display.

F. Ensure that the recording speed of the multiplexer is compatible with the time-lapse speed of the recording device.

G. Adjust variable focal lenses during final acceptance testing.

3.20 ACCEPTANCE TESTING

A. Test CCTV systems, equipment, and components in accordance with manufacturer recommendations.

B. Visually inspect monitors to ensure system monitors are working properly and that cameras are properly aimed and focused.

C. Verify proper operation of remote controls, such as pan/tilt/zoom cameras.

D. Verify proper operation of ancillary device operation, such as heater, blowers, defrosters, washer/wipers, etc.

E. Verify proper operation of matrix switchers, multiplexers, quads, etc., that sequence and cycle between cameras and monitors.

F. Verify that the various camera images are displayed on the appropriate monitors.

G. Verify proper operation of recording devices such as digital video recorders, video cassette recorders, etc.

H. Correct system defect and malfunctions in accordance with manufacturer recommendations.

I. All acceptance testing shall be performed in the presence of the Owner or Owner's Representative.

3.21 DOCUMENTATION

A. Deliver Owner's and user's manuals and installation instructions covering all system equipment to the owner or responsible party upon final acceptance of the system.

Documentation should include the following:

1. Detailed narrative description of the system inputs, signaling, ancillary functions, annunciation, intended sequence of operation, expansion capability, and application considerations and limitations.
2. Operator instructions for basic system operations, including system start-up and reset, operation of manual ancillary function controls such as pan/tilt/zoom cameras, operation of recording devices, etc.
3. Detailed description of routine maintenance and testing as required and as would be provided under a maintenance contract. Include testing and maintenance instructions for each type of device installed.
4. Listing of the individual system components that require periodic testing and maintenance.
5. Schedule of testing and maintenance procedures and intervals for each type of device installed.
6. Detailed troubleshooting instructions for each trouble condition generated form monitored field wiring, including opens, grounds and loop failures, including a list of all trouble signals annunciated by the system, a description of the conditions that cause such trouble signals, and step-by-step instructions describing how to isolate such problems and correct them, or how to call for services, as appropriate.
7. Service directory that included a list of names and telephone numbers of those who provide service for the system.

B. Where required by code or regulation, provide a Premise Security Record of Completion form to the owner or responsible party.

C. Protect documentation that may compromise the premise security system to prevent the unauthorized release of critical system locations, operations and functions.

3.22 TRAINING

A. Provide training for all systems users. Coordinate this with the owner or responsible party.

B. Base training on the level of user involvement with the system, using owner's and operator's manuals as references materials.

C. Make documentation of training available, and include it with the owner's and user's manuals. Include the names of attendees, the date of the training, the scope of the training, and the lesson plan of the training in the documentation

PART 4 - METHOD OF MEASUREMENT

4.1 METHOD OF MEASUREMENT

A. The quantity to be paid for under this Item will be measured on a lump sum basis for quantity and locations of equipment to be provided and installed as indicated on Plans.

PART 5 - BASIS OF PAYMENTS

5.1 BASIS OF PAYMENTS

A. Payment shall be made under the lump sum amount for furnishing, storing, handling, installing, connecting and testing all video surveillance equipment and related electrical work, including but not limited to, cameras, mounting, brackets, power supplies, etc., and related wiring. The stipulated price shall include all work necessary and required for work as indicated and implied on the contract drawings and specified herein.

B. The lump sum price bid shall cover the cost of storing, testing, and installing all required items including, but not limited to, conductors, conduits, duct bank, splices, terminations, electrical components, hardware, junction boxes, panels boards, trenching, excavation, and back filling work through all stages of the project, and all incidentals, labor and materials necessary for the completion of this work as indicated on the drawings, implied and as specified herein, or as ordered by the Engineer and to his complete satisfaction.

C. Progress payments will be made as follows: A 40% payment will be made when 50% of the work has been placed; a second 40% payment will be made when 100% of the work has been placed; the final 20% payment will be made when the work is completed and accepted by the Engineer.

END OF SECTION 282300

ITEM 700-SP – SITE PLUMBING

1. DESCRIPTION:

Under this item, the Contractor shall remove all install all plumbing related work as shown on the plans and details. Work shall include, but not be limited to:

a. Remove existing water lines, quick couplers, valve boxes, drinking fountains double check valve, water meter, splash pad piping, as shown on the plans and details.
b. Install new water supply line, double check valves, water meter pit, RPZ, splash pad supply lines, as shown on plans and details.

2. MATERIALS AND 3.CONSTRUCTION DETAILS:

a. Plumbing Demolition and Installation Specification References

A. Nassau County Standard Specifications & Drawings: Item 59 Relocate Water Boxes Complete.
B. Nassau County Standard Specifications & Drawings: Item 60 Alter Water Service Connections.
C. Nassau County Standard Specifications & Drawings: Item 61 Relocate Water Meter Pit, Complete.
D. Nassau County Standard Specifications & Drawings: Item 121 Drybound Base Course
E. Nassau County Standard Specifications & Drawings: Item 158A Geotextile Cloth
F. Reference Specification: NC Standard Specifications Modified: Item 61SS Water Mains Complete.
G. Reference Specification: Double Check Valve
H. Reference Specification: Gate Valve - Mechanical Joints - 3" Dia.
I. Reference Specification: Plug Valve
J. Reference Specification: Cast Iron Valve Box 5-1/4" Diameter
K. Reference Specification: Cement Lined Ductile Iron Pipe - 3" Dia.
L. Reference Specification: Type "K" Copper Tubing

3. METHOD OF MEASUREMENT AND 5. BASIS OF PAYMENT:

Payment shall be made under the LUMP SUM amount for removing existing plumbing as shown on the plans and details and, and installing all necessary new plumbing supply lines and materials as shown on the plans and details. The stipulated price shall include all work necessary and required for work as indicated and implied on the contract drawings and specified herein.

The lump sum price bid shall cover the cost of all removals and installations as shown on the plans and details and all incidentals, all labor and materials necessary for the completion of this work as indicated on the drawings, specified herein, or as ordered by the Engineer.

Progress payments will be made as follows: A 40% payment will be made when 50% of the work has been placed; a second 40% payment will be made when 100% of the work has been placed; the final 20% payment will be made when the work is completed and accepted by the Engineer.

END OF SECTION

ITEM 61SS – WATER MAINS, COMPLETE

1. DESCRIPTION:

Under this item the Contractor shall furnish and install water/fire mains as shown on the plans and where directed by the Engineer. The intent of this item is to extend new hydrant coverage from County owned mains to the new campus roadways and parking lots in conformance with AWWA standards. Work under this item shall include but not be limited to:

a. Domestic water/fire main installed to provide a minimum 4' bury and riser sections where necessary.

b. Domestic water/fire service installed, flushed, disinfected and pressure tested in accordance with AWWA, New York American, and Nassau County Department of Health standards.

c. Domestic water/fire service tapped and connected to existing County-owned 16" main at the locations shown on the plans or as directed by the Engineer. This shall include all appurtenances and incidentals necessary including tees, fittings, valves, pipe, thrust blocks, backfill material, etc., as described herein.

d. Trench shall be backfilled and compacted according to Nassau County standards.

2. MATERIALS:

a. Pipe

A. General: Pipe and fittings shall be of the materials listed below.

B. Fire Service and Domestic Service

1. Pipe shall be cement lined, ductile iron pipe, Class 52.
2. Pipe shall conform to ASA Standards A21.50, A21.51.
3. Cement linings shall conform to American Standard A21.4 (Linings shall be full standard thickness).
4. Pipe shall have bell and spigot ends for the "Tyton" joint (a single rubber gasket joint). Joint accessories and dimensions shall conform to applicable requirements of American Standard A212.11 and shall be as recommended by the manufacturer.
5. Pipe shall have a bituminous outside and inside coating conforming to American Standard A21.6.

b. Valves

A. Detector Check Valve: will be furnished and installed by the Contractor in accordance with the requirements of New York American Water, Nassau County and Roosevelt Fire District.

B. Gate Valves:

1. The gate valves shall be iron body, bronze mounted, double disc, parallel seat, non-rising stem, as manufactured by the Mueller Company, or approved equal. A two (2") inch operating nut shall be provided. Valves shall have mechanical joint ends unless otherwise shown or noted. All valves to open left. (counter clockwise). Valves shall be in accordance with the requirements of New York American Water, Nassau County and Roosevelt Fire District.
2. The gate valves shall conform to the requirements of AWWA Specifications for "Gate Valves for Ordinary Water Service", C500-61, and shall be designed for 200 psi working pressure.

3. CONSTRUCTION DETAILS:

a. Pipe Installation

A. Depth from finished grade to top of pipe for domestic and fire lines shall be 4 feet minimum. Trenching, bedding and backfilling shall conform to the requirements of Item 3, "Trench, Culvert and Bridge Excavation."

B. Proper and suitable tools and appliances for the safe and convenient handling and laying of pipe and fittings shall be used, and shall in general agree with the manufacturer's recommendations. Deflections, however, shall not exceed 75 percent of the maximum amounts recommended. Care shall be taken to prevent the bell and pipe from being damaged.

C. At the close of work each day, the end of the pipeline shall be tightly sealed with a cap or plug so that no water, dirt, or other foreign substance may enter the pipeline, and this plug shall be kept in place until laying is resumed.

b. Thrust Blocking

A. Concrete thrust blocking shall be provided at plugs, tees, bends, hydrants, and at other locations as may be designated where a sizable unbalanced thrust will be developed. The blocking shall be in general, of such shape and form that the load due to the thrust shall not exceed 2 tons per square foot against earth or 5 tons per square foot against rock when the water pressure in the line is carried at the test pressure. The excavation at such locations shall receive special attention with such hand trimming as may be required to provide a good bearing against undisturbed materials within as short a distance as possible from the pipe or fitting.

B. Where reactions are in the vertical plane, provisions to restrain are in the vertical plan, provisions to restrain the thrust shall be made to meet the existing field conditions by either concrete anchorage, steel dowels grouted into holes drilled in rock, or a combination of both.

c. Rodding

A. Where shown on the plans, or when directed, provide rodding to prevent joint separation. The bands shall be 1/2 inch thick by 2 inches wide. The bands shall be wrought iron and fabricated to provide a snug fit behind the pipe or fitting bell. The tie rods shall be 2/4 inch diameter steel threaded rods unless otherwise specified. Before backfilling all exposed metal shall receive a heavy coat of bitumastic paint.

B. The “rodding” shall be a safety factor supplement and shall not reduce the thrust blocking requirements.

d. Relation to Sewer Mains

A. Except with written permission of the Architect, domestic and fire service lines shall not be laid closer horizontally than 10 feet from a sewer; except where bottom of water pipe will be at least 12 inches above the top of the sewer pipe, in which case the water pipe shall not be laid closer horizontally than 6 feet from the sewer. Where water lines must cross under gravity sewer line, the sewer pipe shall be fully encased in concrete, 6 inches outside of pipe, minimum, for a distance extending to 10 feet each side of the crossing.

e. Flushing, Testing and Disinfection

A. Flush, hydrostatic test, and disinfect the fire and domestic lines as follows:

B. Procedure for Disinfecting: The water injector for introducing the chlorine bearing water into the pipe should be supplied from a tap on the pressure side of the gate valve controlling the flow into the pipeline extension.

C. Rate of Application: Water from the existing distribution system or other source of supply shall be controlled so as to flow slowly into the newly laid pipeline during the application of chlorine. The rate of chlorine mixture flow shall be in such proportion to the rate of water entering the pipe that the chlorine dose applied to the water entering the newly laid pipe shall produce at least 50 PPM residual with a reading of 10 PPM after a 24 hour period.

D. Final Flushing and Testing: Following chlorination, all treated water shall be thoroughly flushed from the newly laid pipeline at its extremities until the replacement water throughout its entire length shall, upon test, be proved comparable in quality to the water served the public from the existing water supply system and as approved by the

public health authority having jurisdiction. Should the initial treatment fail to result on the conditions specified, the entire procedure shall be repeated until satisfactory results are obtained.

E. Flush the pipeline, in sections, governed by the sources of clean water and suitable discharge points. The pipe sections shall be flushed until the water runs clear. The Contractor is advised that flushing does not create sufficient velocities to clear the pipeline of matter that may cause an unsatisfactory bacteriological test. Permission of the Engineer and/or the New York American Water Department and Nassau County Water representative to stop flushing shall involve no responsibility for the results of the bacteriological tests.

F. Make hydrostatic test upon all sections of the pipeline, in the presence of the Engineer and the New York American Water Department and Nassau County representatives. The hydrostatic tests shall be made to test gradients show on the plans, and as follows:

1. Furnish and install, complete with reaction blocking, necessary plugs and caps required for this operation. Main line valves shall be utilized wherever possible to segregate test sections except as directed by the New York American Water Department and Nassau County Water or the Engineer.

2. Furnish all test equipment, including pumps, gauges, and meters. The test equipment shall be approved by the New York American Water Department and Nassau County. Calibration tests shall be furnished.

3. The line shall be filled with water for a period of no less than twenty-four hours then subjected to a pressure equivalent to the elevation as shown. During the test, the measured leakage over a period of 6 hours shall not exceed 20 gallons per inch of diameter per mile of pipe. All air shall be purged from the line before testing.

G. Bacteriological Tests: Make all arrangements with the New York American Water, Nassau County and Nassau County Department of Health for bacteriological tests, and make the tests under their direction. Furnish all equipment, disinfectants, piping, etc. required for the tests. The pipelines shall be flushed and rechlorinated until satisfactory bacteriological sampling has been achieved. The Contractor shall obtain certificates of satisfactory bacteriological tests and furnish them to the Engineer and the New York American Water Department and Nassau County for acceptance of the work.

H. Furnish water for flushing, testing, disinfection and all means and apparatus for getting the water into the pipelines. Furnish, install, and remove any additional temporary blow off piping required to discharge water used for flushing, testing, and disinfecting

I. Give the Engineer, the New York American Water Department, and Nassau County reasonable notice as to the time when he will be prepared to test portions of the work.

END OF SECTION

DOUBLE CHECK VALVE - 1" DIA.
DOUBLE CHECK VALVE – 1 1/2" DIA.
DOUBLE CHECK VALVE - 2" DIA.

WORK: Under these items, the Contractor shall furnish and install **DOUBLE CHECK VALVES** of the size shown on the plans, including all pipe, fittings, valves and other sundries necessary to complete plumbing work and connection to water service and water feed lines in accordance with the plans, specifications and directions of the Engineer, and complying with all rules, regulations and requirements of all regulatory agencies having jurisdiction.

MATERIALS: Unless otherwise provided for herein, all material and methods of construction shall conform to the requirements under Section "B" of the Specifications.

Double Check Valve: The double check valve shall consist of two (2) independently operated, center guided, lead free, spring loaded check valves. The double check valves shall be Model No. 950XLT2, manufactured by Wilkins, Paso Robles, CA, or Model No. LF850 manufactured by FEBCO, Fresno, CA, or approved equal.

SUBMITTALS: The Contractor shall submit shop drawings and catalog cuts of the double check valve and all connecting piping for approval, in accordance with the requirements of the General Conditions, Section C, Special Requirements, Article 11.

GATE VALVE – MECHANICAL JOINTS – 3" DIA.

1. GENERAL:

a. Under this Item, the Contractor shall furnish and install GATE VALVES – MECHANICAL JOINTS, of the size shown on the Plans, in accordance on the plans, specifications and the directions of the Engineer.

2. MATERIALS:

a. Gate Valves: Shall be U.S> Pipe Model #5460, or approved equal, with Mechanical Joint Pipe Ends, Cast Iron Body, Bronze Mounted, Non-Rising Stem, 200 P.S.I. with two inch (2") valve operating nut.

b. Operating Key: An approved operating key of proper size for each valve shall be furnished by the Contractor except that the Contractor need not furnish more than two (2) keys for each size or kind of valve regardless of the quantity of valves called for in the Contract.

c. Shop Drawings: The Contractor shall submit Shop Drawings when required, in accordance with the requirements of the General Conditions, Section C, Special Requirements, Article 11.

d. Measurement and Payment: The quantity of GATE VALVES – MECHANICAL JOINTS to be paid for under these Items shall be the number of valves of each size, furnished and installed in accordance with the Plans and Specifications and directions of the Engineer.

END OF SECTION

PLUG VALVE 1" DIA.
PLUG VALVE 1 1/4" DIA.
PLUG VALVE 1 1/2" DIA.
PLUG VALVE 2" DIA.
GATE VALVE 2 1/2" DIA.

WORK: Under these Items, the Contractor shall furnish and install **PLUG VALVES** and **GATE VALVES**, of the sizes and type shown on the plans, in strict accordance with the plans, specifications, and directions of the Engineer.

PLUG VALVES: Valves two inches (2") and under shall be of the cylindrical Plug Type with a closed bottom and a top seal, fully enclosed one-quarter (1/4) turn check, straight through flow way which is resistant to turbulation of the flow stream, one piece cast bronze cylindrical plug and "T" head that aligns with the ports to provide a visual check of valve position, inside screw ends with I.P. threads, as is manufactured by Mueller Co. No. H-10283, or approved equal. Adaptors are required for connecting to copper tubing.

GATE VALVES: Valves two and one-half inches (2 1/2") and over shall be iron body, bronze mounted, inside screw, non-rising stem, screwed ends, bolted bonnet, modified with a two inch (2") operating nut, Walworth, No. W4, Stockham No. G608, or approved equal.

OPERATING KEY: An approved operating key of proper size for each valve shall be furnished by the Contractor, except that the Contractor need not furnish more than two (2) keys for each type of valve, regardless of the quantity of valves called for in the contract. For plug valves two inches (2") and under, the operating key shall be Mueller Co. No. H-10322, or approved equal. For gate valves greater than two inches (2") the operating key shall be Stockham No. 1V437, or approved equal.

SHOP DRAWINGS: The Contractor shall submit shop drawings when required, in accordance with the requirements of the General Conditions, Section C, Special Requirements, Article 11.

CAST IRON VALVE BOX 5-1/4" DIAMETER

1. **WORK:**
   - **a.** Under this Item, the Contractor shall furnish and install CAST IRON VALVE BOX, 5-1/4" DIAMETER, in accordance with the plans, specifications and the directions of the Engineer.

2. **MATERIALS:**
   - **a.** Box: 5-l/4" diameter valve boxes shall be Bingham & Taylor Fig. No. 4908 with a Fig. No. 4904-L locking cover, or approved equal. The cover shall have the designation "WATER" cast thereon. The boxes shall extend within the limits called for on the plans.
   - **b.** Setting: The valve boxes shall be set plumb, as shown on the plans, on a footing of brick laid in cement mortar, supported on a foundation of broken stone.
   - **c.** Brick: The brick shall be made from clay or shale, well burned, of a quality approved by the Engineer. The mortar shall be composed of one part Portland Cement and two parts sand.
   - **d.** Broken Stone: The broken stone shall be clean broken traprock, or other approved stone, all of which shall pass a one-inch square opening screen and retained on a 5/8 inch square opening screen.

3. **SHOP DRAWINGS:**
   - **a.** The Contractor shall submit Shop Drawings when required, in accordance with the plans, specifications, and directions of the Engineer.

END OF SECTION

CEMENT LINED DUCTILE IRON WATER PIPE – 3" DIA.

1. GENERAL:

a. Under this Item, the Contractor shall furnish and install CEMENT LINED DUCTILE IRON WATER PIPE, of the size shown, in accordance with the plans, specifications and the directions of the Engineer.

2. MATERIALS:

a. Pipe shall be Ductile Iron Pipe Class 52 and better, meeting requirements of A.N.S.I. Specifications A-21.51 and A.W.W.A. Specifications C-151.

b. All pike shall be cement-mortar lined in conformance with A.N.S.I. 21.4. The exterior surface of pipe shall receive a standard foundry coal tar dip coating. Cement Lined Ductile Iron Water Pipe shall consist of bell and spigot type Ductile Iron Pipe Tyton Joint sections with Field Lock Gasket Joints, similar or equal to that manufactured by the U.S. Pike & Foundry Co., Birmingham, Al., and shall conform to the American National Standards Institute C151 and American Water Works Assoc. A21.51., Thickness Class 52 and better. Pipe shall be laid true to line and grade with bells upstream and shall have a full, firm and even bearing on a bed of broken stone as shown in details.

c. Dielectric fillings/flanges shall be used where there is connection between dissimilar metals. All elbows shall be rodded in accordance with the specifications of the Dept. of Environmental Protection, Bureau of Water Supply.

3. INSTALLATION:

a. The Contractor shall do all the work necessary to join the Ductile Iron Pipe to the existing water lines as shown on the plans. The cost for doing this shall be included in the unit price bide for this item.

END OF SECTION

TYPE "K" COPPER TUBING - 1/2" DIA.
TYPE "K" COPPER TUBING – 3/4" DIA.
TYPE "K" COPPER TUBING - 1" DIA.
TYPE "K" COPPER TUBING – 1 ¼" DIA.
TYPE "K" COPPER TUBING – 1 ½" DIA.
TYPE "K" COPPER TUBING - 2" DIA.
TYPE "K" COPPER TUBING - 3" DIA.

WORK: Under these items, the Contractor shall furnish, install and connect the water pipe of the size shown in accordance with the plans, specifications and directions of the Engineer.

PIPE: The water service pipe shall be rigid (drawn) temper type "K" copper tubing in straight lengths meeting the specification for ASTM designation No. B88.

> Exception: If the distance between the water tap to the curb valve is greater than ten (10') feet or cannot be spanned with a single piece of rigid tubing, ductile (annealed) copper tubing may be installed, as approved by DEP.

FITTINGS: Fittings shall be approved wrought copper and bronze solder - joint pressure fittings (ANSI B 16.22), Di-Electric fittings as required.

JOINTS: Joints shall be made by soldering, using 95-5 tin antimony solder. Except from the curb valve to the water tap, joints shall be of the "flared" type.

INSTALLATION: The pipe shall be laid true to line and grade with a cover as indicated on the plans or as directed by the Engineer. When the foundation is good firm earth, the earth should be pared or molded to give a full support and if necessary a layer of fine sand or other suitable material should be placed. The same means of securing firm foundation should be adopted in case the excavation has been made deeper than necessary, in which case the Contractor shall furnish the gravel at his own expense.

Where the bottom of the trench is in rock, fresh fill, soil of low bearing power or other situations where special foundations are required, the Contractor shall provide such foundation in accordance with the written order of the Engineer. The work shall be paid for at the unit prices bid for the materials used in the work.

TESTS: The Contractor shall not backfill over any pipe until ordered by the Engineer. The pipe system shall be tight and show no leaks when filled with water, sealed and subjected to an internal hydrostatic pressure of 100 psi for thirty minutes. Temporary caps shall be placed where required to permit making the tests where valves are not available. The tests shall be made in the presence of the Engineer.

ITEM 800-SA – BUILDING DEMOLITION AND RENOVATION WORK

1. DESCRIPTION:

Under this item, the Contractor shall demolish portions of the existing building and reconstruct portions of the existing building as shown on the plans and details. Work shall include, but not be limited to:

a. Demolition:
   A. Remove exterior masonry wall at on north and side of building in center of building.
   B. Remove exterior opening elements including window and door on south side of building.
   C. Remove the existing single bathroom, including toilet, sink and all plumbing fixtures and the enclosure wall, window and door.
   D. Remove all existing finishes within work area including ceiling.
   E. Remove of existing electrical conduits, receptacles, lights within work area.
   F. As shown on Building Removal Plans & Elevations, and described in Removal Notes on Sheet A-100.

b. Construction:
   A. Renovation of the middle portion of building back to its initial construction design as a passageway to the park.
   B. Restore brick veneer, match existing brick.
   C. Repair existing floor surface and provide new slip resistance floor finish.
   D. Install exterior grade high impact resistant gyp-board ceiling with plaster finish and recessed downlights.
   E. Replace existing storage room door with new exterior metal door.
   F. As shown on Building Construction Plans & Elevations, and described in Construction Notes on Sheet A-101.

c. Cleaning:
   A. Cleaning of existing exterior building façade, including brick repair and cleaning

2. MATERIALS AND 3.CONSTRUCTION DETAILS:

a. See Appendix A - Building Demolition and Renovation Specification References

   B. Reference Section 024119- Selective Demolition
   C. Reference Section 040110- Masonry Cleaning
   D. Reference Section 061000- Rough Carpentry
   E. Reference Section 092400- Portland Cement Plastering (Parging)
   F. Reference Section 092613- Gypsum Veneer Plastering

b. See Appendix E under Item 600-SE-1 Site Electrical and Lighting Work for Electrical Specification References.

4. METHOD OF MEASUREMENT AND 5. BASIS OF PAYMENT:

Payment shall be made under the lump sum amount for removing all materials necessary to open up former passageway through the park access through the building, and installing all necessary materials for a functioning and save access entrance way to the park and restoring the exterior walls of the building. The stipulated price shall include all work necessary and required for work as indicated and implied on the contract drawings and specified herein.

The lump sum price bid shall cover the cost of removing existing electrical wiring and cabling, sheetrock, doors, restroom, office and all associated features and items including, but not limited to,sink, lavatory,tile, hardware, concrete, and incidentals, all labor and materials necessary for the completion of this work as indicated on the drawings, specified herein, or as ordered by the Engineer.

Progress payments will be made as follows: A 40% payment will be made when 50% of the work has been placed; a second 40% payment will be made when 100% of the work has been placed; the final 20% payment will be made when the work is completed and accepted by the Engineer.

END OF SECTION

APPENDIX A

SECTION 024119 - SELECTIVE DEMOLITION

PART 1 - GENERAL

1.1 RELATED DOCUMENTS

A. Drawings and general provisions of the Contract, including General and Supplementary Conditions and Division 01 Specification Sections, apply to this Section.

1.2 SUMMARY

A. Section Includes:

1. Demolition and removal of selected portions of building or structure.
2. Demolition and removal of selected site elements.
3. Salvage of existing items to be reused or recycled.

B. Related Requirements:

1. Section 011000 "Summary" for restrictions on use of the premises, Owner-occupancy requirements, and phasing requirements.
2. Section 017300 "Execution" for cutting and patching procedures.
3. Section 311000 "Site Clearing" for site clearing and removal of above- and below-grade improvements not part of selective demolition.

1.3 DEFINITIONS

A. Remove: Detach items from existing construction and dispose of them off-site unless indicated to be salvaged or reinstalled.

B. Remove and Salvage: Detach items from existing construction, in a manner to prevent damage, and deliver to Owner ready for reuse.

C. Remove and Reinstall: Detach items from existing construction, in a manner to prevent damage, prepare for reuse, and reinstall where indicated.

D. Existing to Remain: Leave existing items that are not to be removed and that are not otherwise indicated to be salvaged or reinstalled.

1.4 MATERIALS OWNERSHIP

A. Unless otherwise indicated, demolition waste becomes property of Contractor.

1.5 PREINSTALLATION MEETINGS

A. Predemolition Conference: Conduct conference at Project site.

1. Inspect and discuss condition of construction to be selectively demolished.
2. Review structural load limitations of existing structure.
3. Review and finalize selective demolition schedule and verify availability of materials, demolition personnel, equipment, and facilities needed to make progress and avoid delays.
4. Review requirements of work performed by other trades that rely on substrates exposed by selective demolition operations.
5. Review areas where existing construction is to remain and requires protection.

1.6 INFORMATIONAL SUBMITTALS

A. Proposed Protection Measures: Submit report, including Drawings, that indicates the measures proposed for protecting individuals and property, for environmental protection, for dust control and, for noise control. Indicate proposed locations and construction of barriers.

B. Schedule of Selective Demolition Activities: Indicate the following:

1. Detailed sequence of selective demolition and removal work, with starting and ending dates for each activity. Ensure Owner's on-site operations are uninterrupted.
2. Interruption of utility services. Indicate how long utility services will be interrupted.
3. Coordination for shutoff, capping, and continuation of utility services.
4. Use of elevator and stairs.

C. Predemolition Photographs or Video: Show existing conditions of adjoining construction, including finish surfaces, that might be misconstrued as damage caused by demolition operations. Comply with Section 013233 "Photographic Documentation." Submit before Work begins.

D. Statement of Refrigerant Recovery: Signed by refrigerant recovery technician responsible for recovering refrigerant, stating that all refrigerant that was present was recovered and that recovery was performed according to EPA regulations. Include name and address of technician and date refrigerant was recovered.

E. Warranties: Documentation indicating that existing warranties are still in effect after completion of selective demolition.

1.7 CLOSEOUT SUBMITTALS

A. Inventory: Submit a list of items that have been removed and salvaged.

1.8 QUALITY ASSURANCE

A. Refrigerant Recovery Technician Qualifications: Certified by an EPA-approved certification program.

1.9 FIELD CONDITIONS

A. Owner will occupy portions of building immediately adjacent to selective demolition area. Conduct selective demolition so Owner's operations will not be disrupted.

B. Conditions existing at time of inspection for bidding purpose will be maintained by Owner as far as practical.

C. Notify Architect of discrepancies between existing conditions and Drawings before proceeding with selective demolition.

D. Hazardous Materials: It is not expected that hazardous materials will be encountered in the Work.

1. Hazardous materials will be removed by Owner before start of the Work.
2. If suspected hazardous materials are encountered, do not disturb; immediately notify Architect and Owner. Hazardous materials will be removed by Owner under a separate contract.

E. Utility Service: Maintain existing utilities indicated to remain in service and protect them against damage during selective demolition operations.

1. Maintain fire-protection facilities in service during selective demolition operations.

1.10 WARRANTY

A. Existing Warranties: Remove, replace, patch, and repair materials and surfaces cut or damaged during selective demolition, by methods and with materials and using approved contractors so as not to void existing warranties. Notify warrantor before proceeding. Existing warranties include the following:

B. Notify warrantor on completion of selective demolition, and obtain documentation verifying that existing system has been inspected and warranty remains in effect. Submit documentation at Project closeout.

1.11 COORDINATION

A. Arrange selective demolition schedule so as not to interfere with Owner's operations.

PART 2 - PRODUCTS

2.1 PERFORMANCE REQUIREMENTS

A. Regulatory Requirements: Comply with governing EPA notification regulations before beginning selective demolition. Comply with hauling and disposal regulations of authorities having jurisdiction.

B. Standards: Comply with ASSE A10.6 and NFPA 241.

PART 3 - EXECUTION

3.1 EXAMINATION

A. Verify that utilities have been disconnected and capped before starting selective demolition operations.

B. Review Project Record Documents of existing construction or other existing condition and hazardous material information provided by Owner. Owner does not guarantee that existing conditions are same as those indicated in Project Record Documents.

C. Survey of Existing Conditions: Record existing conditions by use of preconstruction photograph.

1. Comply with requirements specified in Section 013233 "Photographic Documentation."
2. Inventory and record the condition of items to be removed and salvaged. Provide photographs of conditions that might be misconstrued as damage caused by salvage operations.
3. Before selective demolition or removal of existing building elements that will be reproduced or duplicated in final Work, make permanent record of measurements, materials, and construction details required to make exact reproduction.

3.2 PREPARATION

A. Refrigerant: Before starting demolition, remove refrigerant from mechanical equipment according to 40 CFR 82 and regulations of authorities having jurisdiction.

3.3 UTILITY SERVICES AND MECHANICAL/ELECTRICAL SYSTEMS

A. Existing Services/Systems to Remain: Maintain services/systems indicated to remain and protect them against damage.

B. Existing Services/Systems to Be Removed, Relocated, or Abandoned: Locate, identify, disconnect, and seal or cap off utility services and mechanical/electrical systems serving areas to be selectively demolished.

1. Owner will arrange to shut off indicated services/systems when requested by Contractor.
2. Arrange to shut off utilities with utility companies.
3. If services/systems are required to be removed, relocated, or abandoned, provide temporary services/systems that bypass area of selective demolition and that maintain continuity of services/systems to other parts of building.
4. Disconnect, demolish, and remove fire-suppression systems, plumbing, and HVAC systems, equipment, and components indicated on Drawings to be removed.

    a. Piping to Be Removed: Remove portion of piping indicated to be removed and cap or plug remaining piping with same or compatible piping material.
    b. Piping to Be Abandoned in Place: Drain piping and cap or plug piping with same or compatible piping material and leave in place.

c. Equipment to Be Removed: Disconnect and cap services and remove equipment.
d. Equipment to Be Removed and Reinstalled: Disconnect and cap services and remove, clean, and store equipment; when appropriate, reinstall, reconnect, and make equipment operational.
e. Equipment to Be Removed and Salvaged: Disconnect and cap services and remove equipment and deliver to Owner.
f. Ducts to Be Removed: Remove portion of ducts indicated to be removed and plug remaining ducts with same or compatible ductwork material.
g. Ducts to Be Abandoned in Place: Cap or plug ducts with same or compatible ductwork material and leave in place.

3.4 PROTECTION

A. Temporary Protection: Provide temporary barricades and other protection required to prevent injury to people and damage to adjacent buildings and facilities to remain.

1. Provide protection to ensure safe passage of people around selective demolition area and to and from occupied portions of building.
2. Provide temporary weather protection, during interval between selective demolition of existing construction on exterior surfaces and new construction, to prevent water leakage and damage to structure and interior areas.
3. Protect walls, ceilings, floors, and other existing finish work that are to remain or that are exposed during selective demolition operations.
4. Cover and protect furniture, furnishings, and equipment that have not been removed.
5. Comply with requirements for temporary enclosures, dust control, heating, and cooling specified in Section 015000 "Temporary Facilities and Controls."

B. Temporary Shoring: Design, provide, and maintain shoring, bracing, and structural supports as required to preserve stability and prevent movement, settlement, or collapse of construction and finishes to remain, and to prevent unexpected or uncontrolled movement or collapse of construction being demolished.

1. Strengthen or add new supports when required during progress of selective demolition.

C. Remove temporary barricades and protections where hazards no longer exist.

3.5 SELECTIVE DEMOLITION, GENERAL

A. General: Demolish and remove existing construction only to the extent required by new construction and as indicated. Use methods required to complete the Work within limitations of governing regulations and as follows:

1. Proceed with selective demolition systematically, from higher to lower level. Complete selective demolition operations above each floor or tier before disturbing supporting members on the next lower level.
2. Neatly cut openings and holes plumb, square, and true to dimensions required. Use cutting methods least likely to damage construction to remain or adjoining construction. Use hand tools or small power tools designed for sawing or grinding, not hammering and chopping. Temporarily cover openings to remain.

3. Cut or drill from the exposed or finished side into concealed surfaces to avoid marring existing finished surfaces.
4. Do not use cutting torches until work area is cleared of flammable materials. At concealed spaces, such as duct and pipe interiors, verify condition and contents of hidden space before starting flame-cutting operations. Maintain portable fire-suppression devices during flame-cutting operations.
5. Maintain adequate ventilation when using cutting torches.
6. Remove decayed, vermin-infested, or otherwise dangerous or unsuitable materials and promptly dispose of off-site.
7. Remove structural framing members and lower to ground by method suitable to avoid free fall and to prevent ground impact or dust generation.
8. Locate selective demolition equipment and remove debris and materials so as not to impose excessive loads on supporting walls, floors, or framing.
9. Dispose of demolished items and materials promptly. Comply with requirements in Section 017419 "Construction Waste Management and Disposal."

B. Existing Items to Remain: Protect construction indicated to remain against damage and soiling during selective demolition. When permitted by Architect, items may be removed to a suitable, protected storage location during selective demolition and cleaned and reinstalled in their original locations after selective demolition operations are complete.

C. Removed and Salvaged Items:

1. Clean salvaged items.
2. Pack or crate items after cleaning. Identify contents of containers.
3. Store items in a secure area until delivery to Owner.
4. Transport items to Owner's storage area designated by Owner.
5. Protect items from damage during transport and storage.

3.6 SELECTIVE DEMOLITION PROCEDURES FOR SPECIFIC MATERIALS

A. Concrete: Demolish in small sections. Using power-driven saw, cut concrete to a depth of at least 3/4 inch at junctures with construction to remain. Dislodge concrete from reinforcement at perimeter of areas being demolished, cut reinforcement, and then remove remainder of concrete. Neatly trim openings to dimensions indicated.

B. Concrete: Demolish in sections. Cut concrete full depth at junctures with construction to remain and at regular intervals using power-driven saw, and then remove concrete between saw cuts.

C. Masonry: Demolish in small sections. Cut masonry at junctures with construction to remain, using power-driven saw, and then remove masonry between saw cuts.

D. Concrete Slabs-on-Grade: Saw-cut perimeter of area to be demolished, and then break up and remove.

E. Resilient Floor Coverings: Remove floor coverings and adhesive according to recommendations in RFCI's "Recommended Work Practices for the Removal of Resilient Floor Coverings." Do not use methods requiring solvent-based adhesive strippers.

F. Roofing: Remove no more existing roofing than what can be covered in one day by new roofing and so that building interior remains watertight and weathertight

3.7 DISPOSAL OF DEMOLISHED MATERIALS

A. Remove demolition waste materials from Project site and dispose of them in an EPA-approved construction and demolition waste landfill acceptable to authorities having jurisdiction. and recycle or dispose of them according to Section 017419 "Construction Waste Management and Disposal."

1. Do not allow demolished materials to accumulate on-site.
2. Remove and transport debris in a manner that will prevent spillage on adjacent surfaces and areas.
3. Remove debris from elevated portions of building by chute, hoist, or other device that will convey debris to grade level in a controlled descent.
4. Comply with requirements specified in Section 017419 "Construction Waste Management and Disposal."

B. Burning: Do not burn demolished materials.

3.8 CLEANING

A. Clean adjacent structures and improvements of dust, dirt, and debris caused by selective demolition operations. Return adjacent areas to condition existing before selective demolition operations began.

3.9 SELECTIVE DEMOLITION SCHEDULE

A. Remove and Salvage: Planetarium equipment, consisting of floor mounted Projector and control console, turn over to NCC.

END OF SECTION 024119

SECTION 040110 - MASONRY CLEANING

PART 1 - GENERAL

1.1 RELATED DOCUMENTS

A. Drawings and general provisions of the Contract, including General and Supplementary Conditions and Division 01 Specification Sections, apply to this Section.

1.2 SUMMARY

A. Section includes cleaning the following:

1. Unit masonry surfaces.
2. Stone surfaces.

1.3 ALLOWANCES

A. Allowances for cleaning masonry are specified in Section 012100 "Allowances."

1.4 DEFINITIONS

A. Very Low-Pressure Spray: Under 100 psi

B. Low-Pressure Spray: 100 to 400 psi; 4 to 6 gpm

C. Medium-Pressure Spray: 400 to 800 psi; 4 to 6 gpm .

D. High-Pressure Spray: 800 to 1200 psi; 4 to 6 gpm.

1.5 PREINSTALLATION MEETINGS

A. Preinstallation Conference: Conduct conference at Project site.

1. Review methods and procedures related to cleaning masonry including, but not limited to, the following:

a. Verify masonry-cleaning equipment and facilities needed to make progress and avoid delays.
b. Materials, material application, and sequencing.
c. Cleaning program.
d. Coordination with building occupants.

1.6 SEQUENCING AND SCHEDULING

A. Work Sequence: Perform masonry-cleaning work in the following sequence:

1. Remove plant growth.
2. Inspect for open mortar joints. Where repairs are required, delay further cleaning work until after repairs are completed, cured, and dried to prevent the intrusion of water and other cleaning materials into the wall.
3. Remove paint.
4. Clean masonry surfaces.
5. Where water repellents are to be used on or near masonry, delay application of these chemicals until after cleaning.

B. As scaffolding is removed, patch anchor holes used to attach scaffolding. Patch holes in masonry units according to masonry repair Sections. Patch holes in mortar joints according to masonry repointing Sections.

1.7 ACTION SUBMITTALS

A. Product Data: For each type of product.

1. Include material descriptions and application instructions.
2. Include test data substantiating that products comply with requirements.

1.8 INFORMATIONAL SUBMITTALS

A. Qualification Data: For paint-remover manufacturer and chemical-cleaner manufacturer.

B. Preconstruction Test Reports: For cleaning materials and methods.

C. Cleaning program.

1.9 QUALITY ASSURANCE

A. Paint-Remover Manufacturer Qualifications: A firm regularly engaged in producing masonry cleaners that have been used for similar applications with successful results, and with factory-authorized service representatives who are available for consultation and Project-site inspection and on-site assistance.

B. Chemical-Cleaner Manufacturer Qualifications: A firm regularly engaged in producing masonry cleaners that have been used for similar applications with successful results, and with factory-authorized service representatives who are available for consultation and Project-site inspection and on-site assistance.

C. Cleaning Program: Prepare a written cleaning program that describes cleaning process in detail, including materials, methods, and equipment to be used; protection of surrounding materials; and control of runoff during operations. Include provisions for supervising worker performance and preventing damage.

1. If materials and methods other than those indicated are proposed for any phase of cleaning work, add a written description of such materials and methods, including evidence of successful use on comparable projects and demonstrations to show their effectiveness for this Project.

D. Mockups: Prepare mockups of cleaning on existing surfaces to demonstrate aesthetic effects and to set quality standards for materials and execution.

1. Cleaning: Clean an area as indicated for each type of masonry and surface condition.

a. Test cleaners and methods on samples of adjacent materials for possible adverse reactions. Do not test cleaners and methods known to have deleterious effect.
b. Allow a waiting period of not less than seven days after completion of sample cleaning to permit a study of sample panels for negative reactions.

2. Approval of mockups does not constitute approval of deviations from the Contract Documents contained in mockups unless Architect specifically approves such deviations in writing.

1.10 PRECONSTRUCTION TESTING

A. Preconstruction Testing Service: Engage one or more chemical-cleaner and paint-remover manufacturers to perform preconstruction testing on masonry surfaces.

1. Use test areas as indicated and representative of proposed materials and existing construction.
2. Propose changes to materials and methods to suit Project.

1.11 FIELD CONDITIONS

A. Weather Limitations: Proceed with installation only when existing and forecasted weather conditions permit masonry-cleaning work to be performed according to product manufacturers' written instructions and specified requirements.

B. Clean masonry surfaces only when air temperature is 40 deg F and above and is predicted to remain so for at least seven days after completion of cleaning.

PART 2 - PRODUCTS

2.1 PAINT REMOVERS

A. Alkaline Paste Paint Remover: Manufacturer's standard alkaline paste or gel formulation, for removing paint from masonry; containing no methylene chloride.

B. Covered or Skin-Forming Alkaline Paint Remover: Manufacturer's standard covered or skin-forming, alkaline paste or gel formulation, for removing paint from masonry; containing no methylene chloride.

C. Solvent-Type Paste Paint Remover: Manufacturer's standard water-rinsable, solvent-type paste or gel formulation, for removing paint from masonry.

D. Low-Odor, Solvent-Type Paste Paint Remover: Manufacturer's standard low-odor, water-rinsable, solvent-type paste, gel, or foamed emulsion formulation, for removing paint from masonry; containing no methanol or methylene chloride.

E. Covered, Solvent-Type Paste Paint Remover: Manufacturer's standard, low-odor, covered, water-rinsable, solvent-type paste or gel formulation, for removing paint coatings from masonry; containing no methanol or methylene chloride.

2.2 CLEANING MATERIALS

A. Water: Potable.

B. Hot Water: Water heated to a temperature of 140 to 160 deg F.

C. Detergent Solution, Job Mixed: Solution prepared by mixing 2 cups of tetrasodium pyrophosphate (TSPP), 1/2 cup of laundry detergent, and 20 quarts of hot water for every 5 gal. of solution required.

D. Mold, Mildew, and Algae Remover, Job Mixed: Solution prepared by mixing 2 cups of tetrasodium pyrophosphate (TSPP), 5 quarts of 5 percent sodium hypochlorite (bleach), and 15 quarts of hot water for every 5 gal. of solution required.

E. Nonacidic Gel Cleaner: Manufacturer's standard gel formulation, with pH between 6 and 9, that contains detergents with chelating agents and is specifically formulated for cleaning masonry surfaces.

F. Nonacidic Liquid Cleaner: Manufacturer's standard mildly alkaline liquid cleaner formulated for removing mold, mildew, and other organic soiling from ordinary building materials, including polished stone, brick, aluminum, plastics, and wood.

G. Mild-Acid Cleaner: Manufacturer's standard mild-acid cleaner containing no muriatic (hydrochloric), hydrofluoric, or sulfuric acid; or ammonium bifluoride or chlorine bleaches.

H. Acidic Cleaner: Manufacturer's standard acidic masonry cleaner composed of hydrofluoric acid or ammonium bifluoride blended with other acids, detergents, wetting agents, and inhibitors.

I. One-Part Limestone Acidic Cleaner: Manufacturer's standard one-part acidic formulation for cleaning limestone.

J. Two-Part Chemical Cleaner: Manufacturer's standard system consisting of potassium- or sodium-hydroxide-based, alkaline prewash cleaner and acidic afterwash cleaner that does not contain hydrofluoric acid.

2.3 ACCESSORY MATERIALS

A. Liquid Strippable Masking Agent: Manufacturer's standard liquid, film-forming, strippable masking material for protecting glass, metal, glazed masonry, and polished stone surfaces from damaging effects of acidic and alkaline masonry cleaners.

2.4 CHEMICAL CLEANING SOLUTIONS

A. Dilute chemical cleaners with water to produce solutions not exceeding concentration recommended in writing by chemical-cleaner manufacturer.

B. Acidic Cleaner Solution for Nonglazed Masonry and Unpolished Stone: Dilute acidic cleaner with water to produce hydrofluoric acid content of 3 percent or less, but not greater than that recommended in writing by chemical-cleaner manufacturer.

1. Stones: Use only on unpolished granite, unpolished dolomite marble, and siliceous sandstone.

C. Acidic Cleaner for Glazed Masonry and Polished Stone: Dilute acidic cleaner with water to concentration demonstrated by testing that does not etch or otherwise damage glazed or polished surface, but not greater than that recommended in writing by chemical-cleaner manufacturer.

1. Stones: Use only on polished granite and polished dolomite marble.

PART 3 - EXECUTION

3.1 PROTECTION

A. Comply with each manufacturer's written instructions for protecting building and other surfaces against damage from exposure to its products. Prevent paint removers and chemical cleaning solutions from coming into contact with people, motor vehicles, landscaping, buildings, and other surfaces that could be harmed by such contact.

1. Cover adjacent surfaces with materials that are proven to resist paint removers and chemical cleaners used unless products being used will not damage adjacent surfaces. Use protective materials that are waterproof and UV resistant. Apply masking agents according to manufacturer's written instructions. Do not apply liquid strippable masking agent to painted or porous surfaces. When no longer needed, promptly remove masking to prevent adhesive staining.
2. Do not apply chemical solutions during winds of enough force to spread them to unprotected surfaces.
3. Neutralize alkaline and acid wastes before disposal.
4. Dispose of runoff from operations by legal means and in a manner that prevents soil erosion, undermining of paving and foundations, damage to landscaping, and water penetration into building interiors.

B. Remove gutters and downspouts and associated hardware adjacent to immediate work area and store during masonry cleaning. Reinstall when masonry cleaning is complete.

1. Provide temporary rain drainage during work to direct water away from building.

3.2 CLEANING MASONRY, GENERAL

A. Cleaning Appearance Standard: Cleaned surfaces are to have a uniform appearance as viewed from 20 feet away by Architect.

B. Proceed with cleaning in an orderly manner; work from top to bottom of each scaffold width and from one end of each elevation to the other. Ensure that dirty residues and rinse water do not wash over dry, cleaned surfaces.

C. Use only those cleaning methods indicated for each masonry material and location.

1. Brushes: Do not use wire brushes or brushes that are not resistant to chemical cleaner being used.
2. Spray Equipment: Use spray equipment that provides controlled application at volume and pressure indicated, measured at nozzle. Adjust pressure and volume to ensure that cleaning methods do not damage surfaces, including joints.

a. Equip units with pressure gages.
b. For chemical-cleaner spray application, use low-pressure tank or chemical pump suitable for chemical cleaner indicated, equipped with nozzle having a cone-shaped spray.
c. For water-spray application, use fan-shaped spray that disperses water at an angle of 25 to 50 degrees.
d. For high-pressure water-spray application, use fan-shaped spray that disperses water at an angle of at least 40 degrees.
e. For heated water-spray application, use equipment capable of maintaining temperature between 140 and 160 deg F at flow rates indicated.
f. For steam application, use steam generator capable of delivering live steam at nozzle.

D. Perform each cleaning method indicated in a manner that results in uniform coverage of all surfaces, including corners, moldings, and interstices, and that produces an even effect without streaking or damaging masonry surfaces. Keep wall wet below area being cleaned to prevent streaking from runoff.

E. Perform additional general cleaning, paint and stain removal, and spot cleaning of small areas that are noticeably different when viewed according to the "Cleaning Appearance Standard" Paragraph, so that cleaned surfaces blend smoothly into surrounding areas.

F. Water Application Methods:

1. Water-Soak Application: Soak masonry surfaces by applying water continuously and uniformly to limited area for time indicated. Apply water at low pressures and low volumes in multiple fine sprays using perforated hoses or multiple spray nozzles. Erect a protective enclosure constructed of polyethylene sheeting to cover area being sprayed.

2. Water-Spray Applications: Unless otherwise indicated, hold spray nozzle at least 6 inches from masonry surface and apply water in horizontal back-and-forth sweeping motion, overlapping previous strokes to produce uniform coverage.

G. Steam Cleaning: Apply steam to masonry surfaces at the very low pressures indicated for each type of masonry. Hold nozzle at least 6 inches from masonry surface and apply steam in horizontal back-and-forth sweeping motion, overlapping previous strokes to produce uniform coverage.

H. Chemical-Cleaner Application Methods: Apply chemical cleaners to masonry surfaces according to chemical-cleaner manufacturer's written instructions; use brush or spray application. Do not spray apply at pressures exceeding 50 psi. Do not allow chemicals to remain on surface for periods longer than those indicated or recommended in writing by manufacturer.

I. Rinse off chemical residue and soil by working upward from bottom to top of each treated area at each stage or scaffold setting. Periodically during each rinse, test pH of rinse water running off of cleaned area to determine that chemical cleaner is completely removed.

1. Apply neutralizing agent and repeat rinse if necessary to produce tested pH of between 6.7 and 7.5.

J. After cleaning is complete, remove protection no longer required. Remove tape and adhesive marks.

3.3 PRELIMINARY CLEANING

A. Removing Plant Growth: Completely remove visible plant, moss, and shrub growth from masonry surfaces. Carefully remove plants, creepers, and vegetation by cutting at roots and allowing remaining growth to dry as long as possible before removal. Remove loose soil and plant debris from open joints to whatever depth they occur.

B. Preliminary Cleaning: Before beginning general cleaning, remove extraneous substances that are resistant to planned cleaning methods. Extraneous substances include paint, calking, asphalt, and tar.

1. Carefully remove heavy accumulations of rigid materials from masonry surface with sharp chisel. Do not scratch or chip masonry surface.
2. Remove paint and calking with alkaline paint remover.

   a. Comply with requirements in "Paint Removal" Article.
   b. Repeat application up to two times if needed.

3. Remove asphalt and tar with solvent-type paste paint remover.

   a. Comply with requirements in "Paint Removal" Article.
   b. Apply paint remover only to asphalt and tar by brush without pre-wetting.
   c. Allow paint remover to remain on surface for 10 to 30 minutes.
   d. Repeat application if needed.

3.4 PAINT REMOVAL

A. Paint-Remover Application, General: Apply paint removers according to paint-remover manufacturer's written instructions. Do not allow paint removers to remain on surface for periods longer than those indicated or recommended in writing by manufacturer.

B. Paint Removal with Alkaline Paste Paint Remover:

1. Remove loose and peeling paint using low-pressure water spray, scrapers, stiff brushes, or a combination of these. Let surface dry thoroughly.
2. Apply paint remover to dry, painted surface with brushes.
3. Allow paint remover to remain on surface for period recommended in writing by manufacturer or as determined by preconstruction testing.
4. Rinse with cold water applied by low-pressure spray to remove chemicals and paint residue.
5. Repeat process if necessary to remove all paint.
6. Apply acidic cleaner or manufacturer's recommended afterwash to surface, while surface is still wet, using low-pressure spray equipment or soft-fiber brush. Let cleaner or afterwash remain on surface as a neutralizing agent for period recommended in writing by chemical-cleaner or afterwash manufacturer.
7. Rinse with cold water applied by low-pressure spray to remove chemicals and soil.

C. Paint Removal with Covered or Skin-Forming Alkaline Paint Remover:

1. Remove loose and peeling paint using low-pressure water spray, scrapers, stiff brushes, or a combination of these. Let surface dry thoroughly.
2. Apply paint remover to dry, painted surface with trowel, spatula, or as recommended in writing by manufacturer.
3. Apply cover according to manufacturer's written instructions.
4. Allow paint remover to remain on surface for period recommended in writing by manufacturer or as determined by preconstruction testing.
5. Scrape off paint and remover.
6. Rinse with cold water applied by low-pressure spray to remove chemicals and paint residue.
7. Apply acidic cleaner or manufacturer's recommended afterwash to surface, while surface is still wet, using low-pressure spray equipment or soft-fiber brush. Let cleaner or afterwash remain on surface as a neutralizing agent for period recommended in writing by chemical-cleaner or afterwash manufacturer.
8. Rinse with cold water applied by low-pressure spray to remove chemicals and soil.
9. For spots of remaining paint, apply alkaline paste paint remover, according to "Paint Removal with Alkaline Paste Paint Remover" Paragraph.

D. Paint Removal with Solvent-Type Paste Paint Remover:

1. Remove loose and peeling paint using low-pressure water spray, scrapers, stiff brushes, or a combination of these. Let surface dry thoroughly.
2. Apply thick coating of paint remover to painted surface with natural-fiber cleaning brush, deep-nap roller, or large paint brush. Apply in one or two coats according to manufacturer's written instructions.
3. Allow paint remover to remain on surface for period recommended in writing by manufacturer or as determined by preconstruction testing.

4. Rinse with cold water applied by low-pressure spray to remove chemicals and paint residue.

E. Paint Removal with Covered, Solvent-Type Paste Paint Remover:

1. Remove loose and peeling paint using low-pressure water spray, scrapers, stiff brushes, or a combination of these. Let surface dry thoroughly.
2. Apply paint remover to dry, painted surface with trowel, spatula, or as recommended in writing by manufacturer.
3. Apply cover according to manufacturer's written instructions.
4. Allow paint remover to remain on surface for period recommended in writing by manufacturer or as determined by preconstruction testing.
5. Scrape off paint and remover.
6. Rinse with cold water applied by low-pressure spray to remove chemicals and paint residue.

3.5 CLEANING MASONRY

A. Cold-Water Soak:

1. Apply cold water by intermittent spraying to keep surface moist.
2. Use perforated hoses or other means that apply a fine water mist to entire surface being cleaned.
3. Apply water in cycles of five minutes on and 20 minutes off.
4. Continue spraying until surface encrustation has softened enough to permit its removal by water wash, as indicated by cleaning tests for 72 hours
5. Remove soil and softened surface encrustation from surface with cold water applied by low-pressure spray.

B. Cold-Water Wash: Use cold water applied by low-pressure spray.

C. Hot-Water Wash: Use hot water applied by low-pressure spray.

D. Steam Cleaning: Apply steam at very low pressures not exceeding 30 psi. Remove dirt softened by steam with wood scrapers, stiff-nylon or -fiber brushes, or cold-water wash, as indicated by cleaning tests.

E. Detergent Cleaning:

1. Wet surface with cold water applied by low-pressure spray.
2. Scrub surface with detergent solution using medium-soft brushes until soil is thoroughly dislodged and can be removed by rinsing. Use small brushes to remove soil from mortar joints and crevices. Dip brush in solution often to ensure that adequate fresh detergent is used and that surface remains wet.
3. Rinse with cold water applied by low-pressure spray to remove detergent solution and soil.

F. Mold, Mildew, and Algae Removal:

1. Wet surface with cold water applied by low-pressure spray.

2. Apply mold, mildew, and algae remover by brush or low-pressure spray.
3. Scrub surface with medium-soft brushes until mold, mildew, and algae are thoroughly dislodged and can be removed by rinsing. Use small brushes for mortar joints and crevices. Dip brush in mold, mildew, and algae remover often to ensure that adequate fresh cleaner is used and that surface remains wet.
4. Rinse with cold water applied by low-pressure spray to remove mold, mildew, and algae remover and soil.
5. Repeat cleaning procedure above where required to produce cleaning effect established by mockup.

G. Nonacidic Gel Chemical Cleaning:

1. Wet surface with cold water applied by low-pressure spray.
2. Apply gel cleaner in 1/8-inch (3-mm) thickness by brush, working into joints and crevices. Apply quickly and do not brush out excessively, so area is uniformly covered with fresh cleaner and dwell time is uniform throughout area being cleaned.
3. Let cleaner remain on surface for period recommended in writing by chemical-cleaner manufacturer.
4. Remove bulk of gel cleaner.
5. Rinse with cold water applied by low-pressure spray to remove chemicals and soil.

H. Nonacidic Liquid Chemical Cleaning:

1. Wet surface with hot water applied by low-pressure spray.
2. Apply cleaner to surface in two applications by brush or low-pressure spray.
3. Let cleaner remain on surface for period recommended in writing by chemical-cleaner manufacturer.
4. Rinse with cold water applied by low-pressure spray to remove chemicals and soil.

I. Mild-Acid Chemical Cleaning:

1. Wet surface with cold water applied by low-pressure spray.
2. Apply cleaner to surface in two applications by brush or low-pressure spray.
3. Let cleaner remain on surface for period recommended in writing by chemical-cleaner manufacturer.
4. Rinse with cold water applied by low-pressure spray to remove chemicals and soil.

J. Acidic Chemical Cleaning:

1. Wet surface with cold water applied by low-pressure spray.
2. Apply cleaner to surface in two applications by brush or low-pressure spray.
3. Let cleaner remain on surface for period recommended in writing by chemical-cleaner manufacturer.
4. Rinse with cold water applied by low pressure spray to remove chemicals and soil. Rinse until all foaming, if any, stops and suds disappear.
5. Repeat cleaning procedure above where required to produce cleaning effect established by mockup. Do not repeat more than once. If additional cleaning is required, use steam cleaning.

K. Two-Part Chemical Cleaning:

1. Wet surface with hot water applied by low-pressure spray.
2. Apply alkaline prewash cleaner to surface by brush or roller.
3. Let cleaner remain on surface for period recommended in writing by chemical-cleaner manufacturer unless otherwise indicated.
4. Rinse with hot water applied by medium-pressure spray to remove chemicals and soil.
5. Apply acidic afterwash cleaner to surface in two applications, while surface is still wet, using low-pressure spray equipment, deep-nap roller or soft-fiber brush. Let neutralizer remain on surface for period recommended in writing by manufacturer unless otherwise indicated.
6. Rinse with cold water applied by medium-pressure spray to remove chemicals and soil. Rinse until surface reaction value is between pH 5 and pH 9 according to pH-measuring paper, pen, or indicator solution.
7. Repeat cleaning procedure above where required to produce cleaning effect established by mockup. Do not repeat more than once.

3.6 FIELD QUALITY CONTROL

A. Manufacturer's Field Service: Engage paint-remover manufacturer's and chemical-cleaner manufacturer's factory-authorized service representatives for consultation and Project-site inspection, to perform preconstruction product testing, and provide on-site assistance when requested by Architect. Have paint-remover manufacturer's and chemical-cleaner manufacturer's factory-authorized service representatives visit Project site not less than once to observing progress and quality of the work.

3.7 FINAL CLEANING

A. Clean adjacent nonmasonry surfaces of spillage and debris. Use detergent and soft brushes or cloths.

B. Remove debris from gutters and downspouts. Rinse off roof and flush gutters and downspouts.

C. Remove masking materials, leaving no residues that could trap dirt.

END OF SECTION 040110

SECTION 061053 - MISCELLANEOUS ROUGH CARPENTRY

PART 1 - GENERAL

1.1 RELATED DOCUMENTS

A. Drawings and general provisions of the Contract, including General and Supplementary Conditions and Division 01 Specification Sections, apply to this Section.

1.2 SUMMARY

A. Section Includes:

1. Wood blocking, cants, and nailers.
2. Wood furring and grounds.
3. Plywood backing panels.

1.3 DEFINITIONS

A. Boards or Strips: Lumber of less than 2 inches nominal size in least dimension.

B. Dimension Lumber: Lumber of 2 inches nominal or greater size but less than 5 inches nominal size in least dimension.

1.4 ACTION SUBMITTALS

A. Product Data: For each type of process and factory-fabricated product. Indicate component materials and dimensions and include construction and application details.

1. Include data for wood-preservative treatment from chemical treatment manufacturer and certification by treating plant that treated materials comply with requirements. Indicate type of preservative used and net amount of preservative retained.
2. Include data for fire-retardant treatment from chemical treatment manufacturer and certification by treating plant that treated materials comply with requirements. Include physical properties of treated materials based on testing by a qualified independent testing agency.
3. For fire-retardant treatments, include physical properties of treated lumber both before and after exposure to elevated temperatures, based on testing by a qualified independent testing agency according to ASTM D 5664.
4. For products receiving a waterborne treatment, include statement that moisture content of treated materials was reduced to levels specified before shipment to Project site.

1.5 INFORMATIONAL SUBMITTALS

A. Evaluation Reports: For the following, from ICC-ES:

1. Preservative-treated wood.
2. Fire-retardant-treated wood.
3. Power-driven fasteners.
4. Post-installed anchors.
5. Metal framing anchors.

1.6 DELIVERY, STORAGE, AND HANDLING

A. Stack lumber flat with spacers beneath and between each bundle to provide air circulation. Protect lumber from weather by covering with waterproof sheeting, securely anchored. Provide for air circulation around stacks and under coverings.

PART 2 - PRODUCTS

2.1 WOOD PRODUCTS, GENERAL

A. Lumber: DOC PS 20 and applicable rules of grading agencies indicated. If no grading agency is indicated, provide lumber that complies with the applicable rules of any rules-writing agency certified by the ALSC Board of Review. Provide lumber graded by an agency certified by the ALSC Board of Review to inspect and grade lumber under the rules indicated.

1. Factory mark each piece of lumber with grade stamp of grading agency.
2. For exposed lumber indicated to receive a stained or natural finish, mark grade stamp on end or back of each piece.
3. Dress lumber, S4S, unless otherwise indicated.

B. Maximum Moisture Content of Lumber: 15 percent unless otherwise indicated.

2.2 WOOD-PRESERVATIVE-TREATED MATERIALS

A. Preservative Treatment by Pressure Process: AWPA U1; Use Category UC2 for interior construction not in contact with ground, Use Category UC3b for exterior construction not in contact with ground, and Use Category UC4a for items in contact with ground.

1. Preservative Chemicals: Acceptable to authorities having jurisdiction and containing no arsenic or chromium. Do not use inorganic boron (SBX) for sill plates.
2. For exposed items indicated to receive a stained or natural finish, chemical formulations shall not require incising, contain colorants, bleed through, or otherwise adversely affect finishes.

B. Kiln-dry lumber after treatment to a maximum moisture content of 19 percent. Do not use material that is warped or does not comply with requirements for untreated material.

C. Mark lumber with treatment quality mark of an inspection agency approved by the ALSC Board of Review.

1. For exposed lumber indicated to receive a stained or natural finish, mark end or back of each piece.

D. Application: Treat all miscellaneous carpentry unless otherwise indicated.

1. Wood cants, nailers, curbs, equipment support bases, blocking, stripping, and similar members in connection with roofing, flashing, vapor barriers, and waterproofing.
2. Wood sills, sleepers, blocking, furring, and similar concealed members in contact with masonry or concrete.
3. Wood framing and furring attached directly to the interior of below-grade exterior masonry or concrete walls.
4. Wood framing members that are less than 18 inches above the ground in crawlspaces or unexcavated areas.
5. Wood floor plates that are installed over concrete slabs-on-grade.

2.3 MISCELLANEOUS LUMBER

A. General: Provide miscellaneous lumber indicated and lumber for support or attachment of other construction, including the following:

1. Blocking.
2. Nailers.
3. Cants.
4. Furring.
5. Grounds.
6. Utility shelving.

B. Dimension Lumber Items: Construction or No. 2 grade lumber of any of the following species:

1. Hem-fir (north); NLGA.
2. Mixed southern pine or southern pine; SPIB.
3. Spruce-pine-fir; NLGA.
4. Hem-fir; WCLIB or WWPA.
5. Spruce-pine-fir (south); NeLMA, WCLIB, or WWPA.
6. Western woods; WCLIB or WWPA.
7. Northern species; NLGA.
8. Eastern softwoods; NeLMA.

C. For blocking not used for attachment of other construction, Utility, Stud, or No. 3 grade lumber of any species may be used provided that it is cut and selected to eliminate defects that will interfere with its attachment and purpose.

D. For blocking and nailers used for attachment of other construction, select and cut lumber to eliminate knots and other defects that will interfere with attachment of other work.

E. For furring strips for installing plywood or hardboard paneling, select boards with no knots capable of producing bent-over nails and damage to paneling.

2.4 PLYWOOD BACKING PANELS

A. Equipment Backing Panels: Plywood, DOC PS 1, Exterior, A-C, fire-retardant treated, in thickness indicated or, if not indicated, not less than 1/2-inch nominal thickness.

2.5 FASTENERS

A. General: Provide fasteners of size and type indicated that comply with requirements specified in this article for material and manufacture.

1. Where carpentry is exposed to weather, in ground contact, pressure-preservative treated, or in area of high relative humidity, provide fasteners with hot-dip zinc coating complying with ASTM A 153/A 153M.

B. Nails, Brads, and Staples: ASTM F 1667.

C. Screws for Fastening to Metal Framing: ASTM C 1002, length as recommended by screw manufacturer for material being fastened.

D. Power-Driven Fasteners: Fastener systems with an evaluation report acceptable to authorities having jurisdiction, based on ICC-ES AC70.

E. Post-Installed Anchors: Fastener systems with an evaluation report acceptable to authorities having jurisdiction, based on ICC-ES AC193 or ICC-ES AC308 as appropriate for the substrate.

1. Material: Carbon-steel components, zinc plated to comply with ASTM B 633, Class Fe/Zn 5.
2. Material: Stainless steel with bolts and nuts complying with ASTM F 593 and ASTM F 594, Alloy Group 1 or 2.

2.6 METAL FRAMING ANCHORS

A. Manufacturers: Subject to compliance with requirements, provide products by one of the following:

1. Cleveland Steel Specialty Co.
2. KC Metals Products, Inc.
3. Phoenix Metal Products, Inc.
4. Simpson Strong-Tie Co., Inc.
5. USP Structural Connectors.

B. Galvanized-Steel Sheet: Hot-dip, zinc-coated steel sheet complying with ASTM A 653/A 653M, G60 coating designation.

1. Use for interior locations unless otherwise indicated.

2.7 MISCELLANEOUS MATERIALS

A. Adhesives for Gluing Furring to Concrete or Masonry: Formulation complying with ASTM D 3498 that is approved for use indicated by adhesive manufacturer.

PART 3 - EXECUTION

3.1 INSTALLATION, GENERAL

A. Framing Standard: Comply with AF&PA's WCD 1, "Details for Conventional Wood Frame Construction," unless otherwise indicated.

B. Set carpentry to required levels and lines, with members plumb, true to line, cut, and fitted. Fit carpentry accurately to other construction. Locate furring, nailers, blocking, grounds, and similar supports to comply with requirements for attaching other construction.

C. Install plywood backing panels by fastening to studs; coordinate locations with utilities requiring backing panels. Install fire-retardant-treated plywood backing panels with classification marking of testing agency exposed to view.

D. Install metal framing anchors to comply with manufacturer's written instructions. Install fasteners through each fastener hole.

E. Do not splice structural members between supports unless otherwise indicated.

F. Provide blocking and framing as indicated and as required to support facing materials, fixtures, specialty items, and trim.

1. Provide metal clips for fastening gypsum board or lath at corners and intersections where framing or blocking does not provide a surface for fastening edges of panels. Space clips not more than 16 inches o.c.

G. Provide fire blocking in furred spaces, stud spaces, and other concealed cavities as indicated and as follows:

1. Fire block furred spaces of walls, at each floor level, at ceiling, and at not more than 96 inches o.c. with solid wood blocking or noncombustible materials accurately fitted to close furred spaces.
2. Fire block concealed spaces of wood-framed walls and partitions at each floor level, at ceiling line of top story, and at not more than 96 inches o.c. Where fire blocking is not inherent in framing system used, provide closely fitted solid wood blocks of same width as framing members and 2-inch nominal thickness.
3. Fire block concealed spaces between floor sleepers with same material as sleepers to limit concealed spaces to not more than 100 sq. ft. and to solidly fill space below partitions.
4. Fire block concealed spaces behind combustible cornices and exterior trim at not more than 20 feet o.c.

H. Sort and select lumber so that natural characteristics do not interfere with installation or with fastening other materials to lumber. Do not use materials with defects that interfere with function of member or pieces that are too small to use with minimum number of joints or optimum joint arrangement.

I. Comply with AWPA M4 for applying field treatment to cut surfaces of preservative-treated lumber.

1. Use inorganic boron for items that are continuously protected from liquid water.
2. Use copper naphthenate for items not continuously protected from liquid water.

J. Securely attach carpentry work to substrate by anchoring and fastening as indicated, complying with the following:

1. Table 2304.9.1, "Fastening Schedule," in ICC's International Building Code.
2. Table R602.3(1), "Fastener Schedule for Structural Members," and Table R602.3(2), "Alternate Attachments," in ICC's International Residential Code for One- and Two-Family Dwellings.
3. ICC-ES evaluation report for fastener.

K. Use steel common nails unless otherwise indicated. Select fasteners of size that will not fully penetrate members where opposite side will be exposed to view or will receive finish materials. Make tight connections between members. Install fasteners without splitting wood. Drive nails snug but do not countersink nail heads unless otherwise indicated.

3.2 WOOD BLOCKING AND NAILER INSTALLATION

A. Attach items to substrates to support applied loading. Recess bolts and nuts flush with surfaces unless otherwise indicated.

B. Provide permanent grounds of dressed, pressure-preservative-treated, key-beveled lumber not less than 1-1/2 inches wide and of thickness required to bring face of ground to exact thickness of finish material. Remove temporary grounds when no longer required.

3.3 WOOD FURRING INSTALLATION

A. Install level and plumb with closure strips at edges and openings. Shim with wood as required for tolerance of finish work.

B. Furring to Receive Gypsum Board: Install 1-by-2-inch nominal-size furring vertically at 16 inches o.c.

3.4 PROTECTION

A. Protect wood that has been treated with inorganic boron (SBX) from weather. If, despite protection, inorganic boron-treated wood becomes wet, apply EPA-registered borate treatment. Apply borate solution by spraying to comply with EPA-registered label.

B. Protect miscellaneous rough carpentry from weather. If, despite protection, miscellaneous rough carpentry becomes wet, apply EPA-registered borate treatment. Apply borate solution by spraying to comply with EPA-registered label.

END OF SECTION 061053

SECTION 092400 - PORTLAND CEMENT PLASTERING (PARGING)

PART 1 - GENERAL

1.1 SUMMARY

A. This Section includes the following:

1. Exterior Portland cement plasterwork (stucco parging) on metal lath.

1.2 SUBMITTALS

A. Product Data: For each type of product indicated.

B. Samples: For each type of finish coat indicated; 12 by 12 inches, and prepared on rigid backing.

1.3 QUALITY ASSURANCE

A. Mockups: Before plastering, install mockups of at least 50 sq. ft. in surface area to demonstrate aesthetic effects and set quality standards for materials and execution.

1. Install mockups for each type of finish indicated.
2. Approved mockups may become part of the completed Work if undisturbed at time of Substantial Completion.

1.4 PROJECT CONDITIONS

A. Comply with ASTM C 926 requirements.

B. Exterior Plasterwork: Apply plaster when ambient temperature is greater than 40 deg F.

PART 2 - PRODUCTS

2.1 MANUFACTURERS

A. In other Part 2 articles where titles below introduce lists, the following requirements apply to product selection:

1. Available Products: Subject to compliance with requirements, products that may be incorporated into the Work include, but are not limited to, products specified.

2.2 METAL LATH

A. Expanded-Metal Lath: ASTM C 847 with ASTM A 653/A 653M, G60 (Z180), hot-dip galvanized zinc coating.

1. Diamond-Mesh Lath: Flat.

a. Weight: 2.5 lb/sq. yd. (1.4 kg/sq. m)

2.3 ACCESSORIES

A. General: Comply with ASTM C 1063 and coordinate depth of trim and accessories with thicknesses and number of plaster coats required.

B. Zinc Accessories:

1. Foundation Weep Screed: Fabricated from hot-dip galvanized steel sheet, ASTM A 653/A 653M, G60 (Z180) zinc coating.
2. External-Corner Reinforcement: Fabricated from metal lath with ASTM A 653/A 653M, G60 (Z180), hot-dip galvanized zinc coating.
3. Casing Beads: Fabricated from zinc; square-edged style; with expanded flanges.
4. Control Joints: Fabricated from zinc; one-piece-type, folded pair of unperforated screeds in M-shaped configuration; with perforated flanges and removable protective tape on plaster face of control joint.

2.4 MISCELLANEOUS MATERIALS

A. Water for Mixing: Potable and free of substances capable of affecting plaster set or of damaging plaster, lath, or accessories.

B. Fiber for Base Coat: Alkaline-resistant glass or polypropylene fibers, 1/2 inch (13 mm) long, free of contaminants, manufactured for use in Portland cement plaster.

C. Bonding Compound: ASTM C 932.

D. Steel Drill Screws: For metal-to-metal fastening, ASTM C 1002 or ASTM C 954, as required by thickness of metal being fastened; with pan head that is suitable for application; in lengths required to achieve penetration through joined materials of not fewer than three exposed threads.

E. Fasteners for Attaching Metal Lath to Substrates: Complying with ASTM C 1063.

2.5 PLASTER MATERIALS

A. Portland Cement: ASTM C 150, Type I.

1. Color for Finish Coats: Color to match existing

B. Colorants for Job-Mixed Finish-Coats: Colorfast mineral pigments that produce finish plaster color to match existing.

C. Lime: ASTM C 206, Type S; or ASTM C 207, Type S.

D. Sand Aggregate: ASTM C 897.

1. Color for Job-Mixed Finish Coats: In color matching existing.

E. Ready-Mixed Finish-Coat Plaster: Mill-mixed Portland cement, aggregates, coloring agents, and proprietary ingredients.

1. Products:

a. California Stucco Products Corp.; Conventional Portland Cement Stucco.
b. ChemRex; Thoro Stucco.
c. United States Gypsum Co.; Oriental Exterior Finish Stucco.

2. Color: Match existing.

2.6 PLASTER MIXES

A. General: Comply with ASTM C 926 for applications indicated.

1. Fiber Content: Add fiber to base-coat mixes after ingredients have mixed at least two minutes. Comply with fiber manufacturer's written instructions for fiber quantities in mixes, but do not exceed [1 lb of fiber/cu. yd. (0.6 kg of fiber/cu. m)] <Insert value> of cementitious materials. Reduce aggregate quantities accordingly to maintain workability.

B. Portland Cement Base-Coat Mixes:

1. Over Metal Lath: Scratch and brown coats for three-coat plasterwork as follows:

a. Scratch Coat: For cementitious material, mix 1 part Portland cement and 3/4 to 1-1/2 parts lime. Use 2-1/2 to 4 parts aggregate per part of cementitious material (sum of separate volumes of each component material).
b. Brown Coat: For cementitious material, mix 1 part Portland cement and 3/4 to 1-1/2 parts lime. Use 3 to 5 parts aggregate per part of cementitious material (sum of separate volumes of each component material).

c. For cementitious material, mix 1 part Portland cement and 0 to 3/4 part lime. Use 2-1/2 to 4 parts aggregate per part of cementitious material (sum of separate volumes of each component material).

C. Factory-Prepared Finish-Coat Mixes: For ready-mixed finish-coat plasters, comply with manufacturer's written instructions.

PART 3 - EXECUTION

3.1 PREPARATION

A. Protect adjacent work from soiling, spattering, moisture deterioration, and other harmful effects caused by plastering.

B. Prepare solid-plaster bases that are smooth or that do not have the suction capability required to bond with plaster according to ASTM C 926.

3.2 INSTALLING METAL LATH

A. Expanded-Metal Lath: Install according to ASTM C 1063.

1. On Solid Surfaces, Not Otherwise Furred: Install diamond-mesh lath.

3.3 INSTALLING ACCESSORIES

A. Install according to ASTM C 1063 and at locations indicated on Drawings.

B. Reinforcement for External Corners:

1. Install lath-type external-corner reinforcement at exterior locations.
2. Install cornerbead at exterior locations.

C. Control Joints: Install control joints in specific locations approved by Architect for visual effect as follows:

1. As required to delineate plasterwork into areas (panels) of the following maximum sizes:

a. Vertical Surfaces: 144 sq. ft.
b. Horizontal and other Nonvertical Surfaces: 100 sq. ft.

2. At distances between control joints of not greater than 18 feet o.c.
3. As required to delineate plasterwork into areas (panels) with length-to-width ratios of not greater than 2-1/2:1.
4. Where control joints occur in surface of construction directly behind plaster.
5. Where plasterwork areas change dimensions, to delineate rectangular-shaped areas (panels) and to relieve the stress that occurs at the corner formed by the dimension change.

3.4 PLASTER APPLICATION

A. General: Comply with ASTM C 926.

B. Bonding Compound: Apply on unit masonry plaster bases.

C. Plaster Finish Coats: Apply to provide float finish to match existing.

3.5 CUTTING AND PATCHING

A. Cut, patch, replace, and repair plaster as necessary to accommodate other work and to restore cracks, dents, and imperfections. Repair or replace work to eliminate blisters, buckles, crazing (check cracking), dry outs, efflorescence, sweat outs, and similar defects and where bond to substrate has failed.

END OF SECTION 092400

SECTION 092900 - GYPSUM BOARD

PART 1 - GENERAL

1.1 RELATED DOCUMENTS

A. Drawings and general provisions of the Contract, including General and Supplementary Conditions and Division 01 Specification Sections, apply to this Section.

1.2 SUMMARY

A. Section Includes:

1. Interior gypsum board.
2. Tile backing panels.

B. Related Requirements:

1. Section 092216 "Non-Structural Metal Framing" for non-structural steel framing and suspension systems that support gypsum board panels.
2. Section 093013 "Ceramic Tiling" for cementitious backer units installed as substrates for ceramic tile.

1.3 ACTION SUBMITTALS

A. Product Data: For each type of product.

1.4 DELIVERY, STORAGE AND HANDLING

A. Store materials inside under cover and keep them dry and protected against weather, condensation, direct sunlight, construction traffic, and other potential causes of damage. Stack panels flat and supported on risers on a flat platform to prevent sagging.

1.5 FIELD CONDITIONS

A. Environmental Limitations: Comply with ASTM C 840 requirements or gypsum board manufacturer's written instructions, whichever are more stringent.

B. Do not install paper-faced gypsum panels until installation areas are enclosed and conditioned.

C. Do not install panels that are wet, moisture damaged, and mold damaged.

1. Indications that panels are wet or moisture damaged include, but are not limited to, discoloration, sagging, or irregular shape.

2. Indications that panels are mold damaged include, but are not limited to, fuzzy or splotchy surface contamination and discoloration.

PART 2 - PRODUCTS

2.1 PERFORMANCE REQUIREMENTS

A. Fire-Resistance-Rated Assemblies: For fire-resistance-rated assemblies, provide materials and construction identical to those tested in assembly indicated according to ASTM E 119 by an independent testing agency.

B. STC-Rated Assemblies: For STC-rated assemblies, provide materials and construction identical to those tested in assembly indicated according to ASTM E 90 and classified according to ASTM E 413 by an independent testing agency.

2.2 GYPSUM BOARD, GENERAL

A. Size: Provide maximum lengths and widths available that will minimize joints in each area and that correspond with support system indicated.

2.3 INTERIOR GYPSUM BOARD

A. Gypsum Board, Type X: ASTM C 1396/C 1396M.

1. Manufacturers: Subject to compliance with requirements, provide products by one of the following:

a. American Gypsum.
b. CertainTeed Corporation.
c. Georgia-Pacific Gypsum LLC.
d. USG Corporation.

2. Thickness: 5/8 inch.
3. Long Edges: Tapered.

B. Gypsum Ceiling Board: ASTM C 1396/C 1396M.

1. Manufacturers: Subject to compliance with requirements, provide products by one of the following:

a. American Gypsum.
b. CertainTeed Corporation.
c. Georgia-Pacific Gypsum LLC.
d. USG Corporation.

2. Thickness: 1/2 inch.
3. Long Edges: Tapered.

C. Mold-Resistant Gypsum Board: ASTM C 1396/C 1396M. With moisture- and mold-resistant core and paper surfaces.

1. Manufacturers: Subject to compliance with requirements, provide products by one of the following:

   a. American Gypsum.
   b. CertainTeed Corporation.
   c. Georgia-Pacific Gypsum LLC.
   d. USG Corporation.

2. Core: 5/8 inch, Type X.
3. Long Edges: Tapered.
4. Mold Resistance: ASTM D 3273, score of 10 as rated according to ASTM D 3274.

2.4 EXTERIOR GYPSUM BOARD FOR CEILINGS AND SOFFITS

A. Exterior Gypsum Soffit Board: ASTM C 1396/C 1396M, with manufacturer's standard edges.

1. Manufacturers: Subject to compliance with requirements, provide products by one of the following:

   a. American Gypsum.
   b. CertainTeed Corporation.
   c. Georgia-Pacific Gypsum LLC.
   d. USG Corporation.

2. Core: 5/8 inch, Type X.

2.5 TILE BACKING PANELS

A. Cementitious Backer Units: ANSI A118.9 and ASTM C 1288 or ASTM C 1325, with manufacturer's standard edges.

1. Manufacturers: Subject to compliance with requirements, provide products by one of the following:

   a. CertainTeed Corporation.
   b. Custom Building Products.
   c. National Gypsum Company.
   d. USG Corporation.

2. Thickness: 5/8 inch.
3. Mold Resistance: ASTM D 3273, score of 10 as rated according to ASTM D 3274.

2.6 TRIM ACCESSORIES

A. Interior Trim: ASTM C 1047.

1. Material: Galvanized or aluminum-coated steel sheet, rolled zinc, plastic, or paper-faced galvanized-steel sheet.
2. Shapes:

    a. Cornerbead.
    b. Bullnose bead.
    c. LC-Bead: J-shaped; exposed long flange receives joint compound.
    d. L-Bead: L-shaped; exposed long flange receives joint compound.
    e. U-Bead: J-shaped; exposed short flange does not receive joint compound.
    f. Expansion (control) joint.
    g. Curved-Edge Cornerbead: With notched or flexible flanges.

B. Exterior Trim: ASTM C 1047.

1. Material: Hot-dip galvanized-steel sheet, plastic, or rolled zinc.
2. Shapes:

    a. Cornerbead.
    b. LC-Bead: J-shaped; exposed long flange receives joint compound.
    c. Expansion (Control) Joint: One-piece, rolled zinc with V-shaped slot and removable strip covering slot opening.

2.7 JOINT TREATMENT MATERIALS

A. General: Comply with ASTM C 475/C 475M.

B. Joint Tape:

1. Interior Gypsum Board: Paper.
2. Exterior Gypsum Soffit Board: Paper.
3. Tile Backing Panels: As recommended by panel manufacturer.

C. Joint Compound for Interior Gypsum Board: For each coat, use formulation that is compatible with other compounds applied on previous or for successive coats.

1. Prefilling: At open joints and damaged surface areas, use setting-type taping compound.
2. Embedding and First Coat: For embedding tape and first coat on joints, fasteners, and trim flanges, use setting-type taping compound.

    a. Use setting-type compound for installing paper-faced metal trim accessories.

3. Fill Coat: For second coat, use setting-type, sandable topping compound.
4. Finish Coat: For third coat, use drying-type, all-purpose compound.

D. Joint Compound for Exterior Applications:

1. Exterior Gypsum Soffit Board: Use setting-type taping compound and setting-type, sandable topping compound.
2. Glass-Mat Gypsum Sheathing Board: As recommended by sheathing board manufacturer.

E. Joint Compound for Tile Backing Panels:

1. Glass-Mat, Water-Resistant Backing Panel: As recommended by backing panel manufacturer.
2. Cementitious Backer Units: As recommended by backer unit manufacturer.
3. Water-Resistant Gypsum Backing Board: Use setting-type taping compound and setting-type, sandable topping compound.

2.8 AUXILIARY MATERIALS

A. General: Provide auxiliary materials that comply with referenced installation standards and manufacturer's written instructions.

B. Steel Drill Screws: ASTM C 1002 unless otherwise indicated.

1. Use screws complying with ASTM C 954 for fastening panels to steel members from 0.033 to 0.112 inch thick.
2. For fastening cementitious backer units, use screws of type and size recommended by panel manufacturer.

C. Sound-Attenuation Blankets: ASTM C 665, Type I (blankets without membrane facing) produced by combining thermosetting resins with mineral fibers manufactured from glass, slag wool, or rock wool.

1. Fire-Resistance-Rated Assemblies: Comply with mineral-fiber requirements of assembly.

D. Acoustical Sealant: Manufacturer's standard nonsag, paintable, nonstaining latex sealant complying with ASTM C 834. Product effectively reduces airborne sound transmission through perimeter joints and openings in building construction as demonstrated by testing representative assemblies according to ASTM E 90.

1. Manufacturers: Subject to compliance with requirements, provide products by one of the following:

a. Grabber Construction Products.
b. Pecora Corporation.
c. USG Corporation.

E. Thermal Insulation: As specified in Section 072100 "Thermal Insulation."

PART 3 - EXECUTION

3.1 EXAMINATION

A. Examine areas and substrates including welded hollow-metal frames and support framing, with Installer present, for compliance with requirements and other conditions affecting performance of the Work.

B. Examine panels before installation. Reject panels that are wet, moisture damaged, and mold damaged.

C. Proceed with installation only after unsatisfactory conditions have been corrected.

3.2 APPLYING AND FINISHING PANELS, GENERAL

A. Comply with ASTM C 840.

B. Install ceiling panels across framing to minimize the number of abutting end joints and to avoid abutting end joints in central area of each ceiling. Stagger abutting end joints of adjacent panels not less than one framing member.

C. Install panels with face side out. Butt panels together for a light contact at edges and ends with not more than 1/16 inch of open space between panels. Do not force into place.

D. Locate edge and end joints over supports, except in ceiling applications where intermediate supports or gypsum board back-blocking is provided behind end joints. Do not place tapered edges against cut edges or ends. Stagger vertical joints on opposite sides of partitions. Do not make joints other than control joints at corners of framed openings.

E. Form control and expansion joints with space between edges of adjoining gypsum panels.

F. Cover both faces of support framing with gypsum panels in concealed spaces (above ceilings, etc.), except in chases braced internally.

1. Unless concealed application is indicated or required for sound, fire, air, or smoke ratings, coverage may be accomplished with scraps of not less than 8 sq. ft. in area.
2. Fit gypsum panels around ducts, pipes, and conduits.
3. Where partitions intersect structural members projecting below underside of floor/roof slabs and decks, cut gypsum panels to fit profile formed by structural members; allow 1/4- to 3/8-inch-wide joints to install sealant.

G. Isolate perimeter of gypsum board applied to non-load-bearing partitions at structural abutments. Provide 1/4- to 1/2-inch-wide spaces at these locations and trim edges with edge trim where edges of panels are exposed. Seal joints between edges and abutting structural surfaces with acoustical sealant.

H. Attachment to Steel Framing: Attach panels so leading edge or end of each panel is attached to open (unsupported) edges of stud flanges first.

I. Wood Framing: Install gypsum panels over wood framing, with floating internal corner construction. Do not attach gypsum panels across the flat grain of wide-dimension lumber, including floor joists and headers. Float gypsum panels over these members or provide control joints to counteract wood shrinkage.

J. STC-Rated Assemblies: Seal construction at perimeters, behind control joints, and at openings and penetrations with a continuous bead of acoustical sealant. Install acoustical sealant at both faces of partitions at perimeters and through penetrations. Comply with ASTM C 919 and with manufacturer's written instructions for locating edge trim and closing off sound-flanking paths around or through assemblies, including sealing partitions above acoustical ceilings.

K. Install sound attenuation blankets before installing gypsum panels unless blankets are readily installed after panels have been installed on one side.

3.3 APPLYING INTERIOR GYPSUM BOARD

A. Install interior gypsum board in the following locations:

1. Wallboard Type: As indicated on Drawings.
2. Type X: As indicated on Drawings.
3. Ceiling Type: As indicated on Drawings.

B. Single-Layer Application:

1. On ceilings, apply gypsum panels before wall/partition board application to greatest extent possible and at right angles to framing unless otherwise indicated.
2. On partitions/walls, apply gypsum panels vertically (parallel to framing) unless otherwise indicated or required by fire-resistance-rated assembly, and minimize end joints.

    a. Stagger abutting end joints not less than one framing member in alternate courses of panels.
    b. At stairwells and other high walls, install panels horizontally unless otherwise indicated or required by fire-resistance-rated assembly.

3. On Z-shaped furring members, apply gypsum panels vertically (parallel to framing) with no end joints. Locate edge joints over furring members.
4. Fastening Methods: Apply gypsum panels to supports with steel drill screws.

3.4 APPLYING EXTERIOR GYPSUM PANELS FOR CEILINGS AND SOFFITS

A. Apply panels perpendicular to supports, with end joints staggered and located over supports.

1. Install with 1/4-inch open space where panels abut other construction or structural penetrations.
2. Fasten with corrosion-resistant screws.

3.5 APPLYING TILE BACKING PANELS

A. Cementitious Backer Units: ANSI A108.11, at locations indicated to receive tile.

B. Where tile backing panels abut other types of panels in same plane, shim surfaces to produce a uniform plane across panel surfaces.

3.6 INSTALLING TRIM ACCESSORIES

A. General: For trim with back flanges intended for fasteners, attach to framing with same fasteners used for panels. Otherwise, attach trim according to manufacturer's written instructions.

B. Control Joints: Install control joints according to ASTM C 840 and in specific locations approved by Architect for visual effect.

C. Interior Trim: Install in the following locations:

1. Cornerbead: Use at outside corners unless otherwise indicated.
2. Bullnose Bead: Use where indicated.
3. LC-Bead: Use at exposed panel edges.
4. L-Bead: Use where indicated.
5. U-Bead: Use where indicated.

D. Exterior Trim: Install in the following locations:

1. Cornerbead: Use at outside corners.
2. LC-Bead: Use at exposed panel edges.

3.7 FINISHING GYPSUM BOARD

A. General: Treat gypsum board joints, interior angles, edge trim, control joints, penetrations, fastener heads, surface defects, and elsewhere as required to prepare gypsum board surfaces for decoration. Promptly remove residual joint compound from adjacent surfaces.

B. Prefill open joints and damaged surface areas.

C. Apply joint tape over gypsum board joints, except for trim products specifically indicated as not intended to receive tape.

D. Gypsum Board Finish Levels: Finish panels to levels indicated below and according to ASTM C 840:

1. Level 1: Ceiling plenum areas, concealed areas, and where indicated.
2. Level 2: Panels that are substrate for tile] Where indicated on Drawings.
3. Level 3: Where indicated on Drawings.
4. Level 4: At panel surfaces that will be exposed to view unless otherwise indicated.

   a. Primer and its application to surfaces are specified in Section 099123 "Interior Painting."

5. Level 5: At all "Erasable Wall Coverings" substrates & where indicated on Drawings.

   a. Primer and its application to surfaces are specified in Section 099123 "Interior Painting."

E. Cementitious Backer Units: Finish according to manufacturer's written instructions.

3.8 PROTECTION

A. Protect adjacent surfaces from drywall compound and promptly remove from floors and other non-drywall surfaces. Repair surfaces stained, marred, or otherwise damaged during drywall application.

B. Protect installed products from damage from weather, condensation, direct sunlight, construction, and other causes during remainder of the construction period.

C. Remove and replace panels that are wet, moisture damaged, and mold damaged.

1. Indications that panels are wet or moisture damaged include, but are not limited to, discoloration, sagging, or irregular shape.
2. Indications that panels are mold damaged include, but are not limited to, fuzzy or splotchy surface contamination and discoloration.

END OF SECTION 092900

ITEM 900-AUC – ALLOWANCE FOR UNFORSEEN CONDITIONS

1. DESCRIPTION:

   a. This section will provide for payment of work, which has been authorized, and is pending addition to the Department's contract estimates payment system. Payments made under this section shall be reconciled through formal change orders, such that the final payment quantity of this section shall be a quantity of zero.
   b. This item is set aside for use of remedial repairs unforeseen or not specifically characterized in the Contract Documents on the existing Park Administration/Restroom Building, as directed by the County.
   c. It shall also include any work unforeseen or not specifically characterized in the Contract Documents encountered on site during the course of construction, as directed by the County.

2. MATERIALS:

   All materials shall meet the requirements of the Contract Documents, require submittals, and shall need preapproval by the Engineer.

3. CONSTRUCTION DETAILS:

   Construction details shall conform to the requirements of the Specification sections governing the work of the Contract Documents. Details will need to be submitted to the Engineer for approval before any work can begin.

4. METHOD OF MEASUREMENT:

   The fixed price LUMP SUM shown in the proposal for this item shall be considered as the price bid, and shall not be altered in any manner. Should the amount shown be altered, the new figure shall be disregarded and the original price will be used to determine the total amount bid for the contract.

5. BASIS OF PAYMENT:

   Payments under this section shall be determined from the actual quantities and unit prices of eligible work, which has been completed in conformance with applicable sections of the Specifications. The dollar value of payments shall be converted to a percentage payment of the fixed price LUMP SUM shown in the proposal. The fixed price lump sum value shown in the proposal shall be the maximum eligible value of payment under this section, and shall not be altered.

   Once the contract has been amended to provide payment quantities under other pay items, payments shall be made under those items and payments made under this section shall be deleted. This section may again be used to make payment for further work, but at no time shall the total payments exceed the fixed price lump sum shown in the proposal. Prior to, or as part of the final payment submission, all payments made under this section must be transferred to appropriate contract work items, and payments provided under this section shall be deleted for the final contract payment submission.

END OF SECTION

(On Construction firms letterhead)

Date Issued: _____

Dear Resident:

We are sorry to inconvenience you, but in order to proceed with construction for _____ we must close and/or limit your access to your driveway. As work progresses, you will be notified on a daily basis when and how your particular residence will be affected. We assure you that every effort will be made to minimize the impact to you relative to this construction.

Our current schedule calls for the project related work to be performed in your area during the week of _____. A copy of this letter with specific dates and time for this work will be delivered at least twenty-four (24) hours in advance in order that you will have sufficient opportunity to plan for accessibility to your vehicles.

If additional information is necessary, you may contact any of the representatives listed below.

Thank you for your patience.

Contractor	_____	Phone:	_____
Inspector	_____	Phone:	_____
Project Manager	_____	Phone:	_____

_____

(On Construction firms letterhead)

_____

Date Issued: _____

CONSTRUCTION NOTIFICATION
24 HOUR NOTICE

Date & Type of Construction: _____
How will residence be affected: _____
Approximate time of Construction: _____

Driveway access (will) (will not) be permitted.